Booklet available in English on
Heft in deutscher Sprache erhältlich auf
Livret disponible en français sur
Libretto disponibile in Italiano su
Folleto disponible en español en
如需中文版手册，请访问

ENJOY ALL THE THRILLS OF THE FAIRGROUND!

Step right up and enjoy all the magic of the fantastic LEGO® Fairground! There's something for everyone; from a charming Carousel and a fun Ferris Wheel to the scariest of Haunted Houses and a hair-raising Roller Coaster. And for all you thrill-seekers out there, we're delighted to announce the arrival of our latest sensational attraction: the breath-taking, gravity-challenging Loop Coaster! 3,756 LEGO pieces of pure funfair excitement!

2014

10244 Fairground Mixer
The Fairground Collection rolled into town on lorries and unfolded into a wild mixer ride. Like all future rides, models come to life with a simple turn of a crank or could be upgraded with power functions.

2015

10247 Ferris Wheel
The Ferris Wheel towered over the growing fairground at 58 cm (22.5 in.) high, with 12 colourful gondolas. With a simple pull of a lever, loading platforms could be raised and lowered to ensure the safety of guests.

2017

10257 Carousel
This enchanted carousel brought a whole new level of detailing to the fairground. Complete with reflective surfaces, a textile canopy and a menagerie of fantastic animals, this classic icon quickly became a fan favourite.

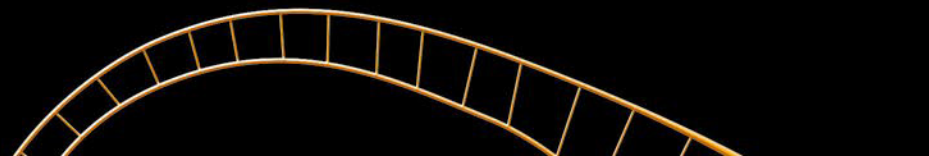

2018

2020

10261 Roller Coaster
Launching a whole new track system, the fully functional roller coaster had two trains, a loading station and an impressive number of dips and turns. It was the only LEGO® model to include the complete track system.

10273 Haunted House
A lift like no other, this spooky attraction lifted riders to the top of the manor tower then released them down the shaft with only screams of joy escaping this haunted place.

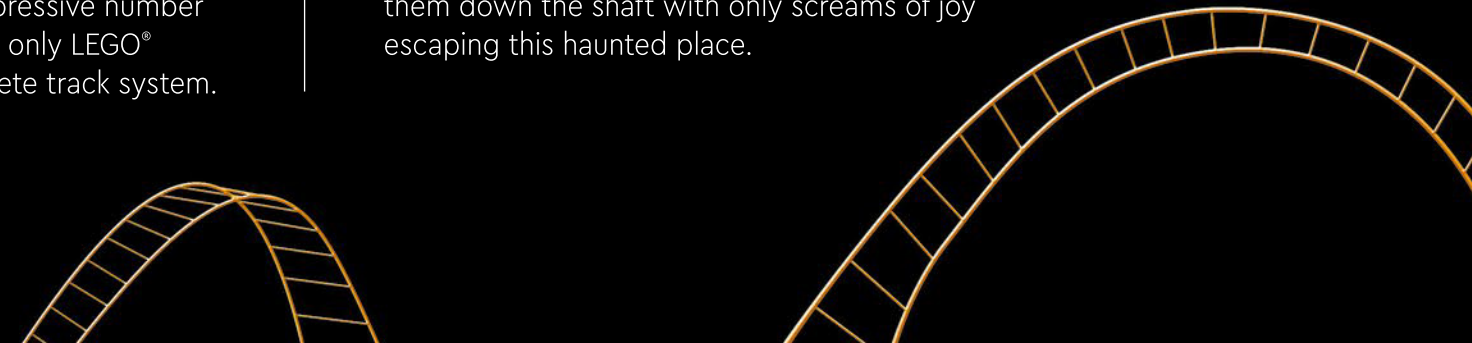

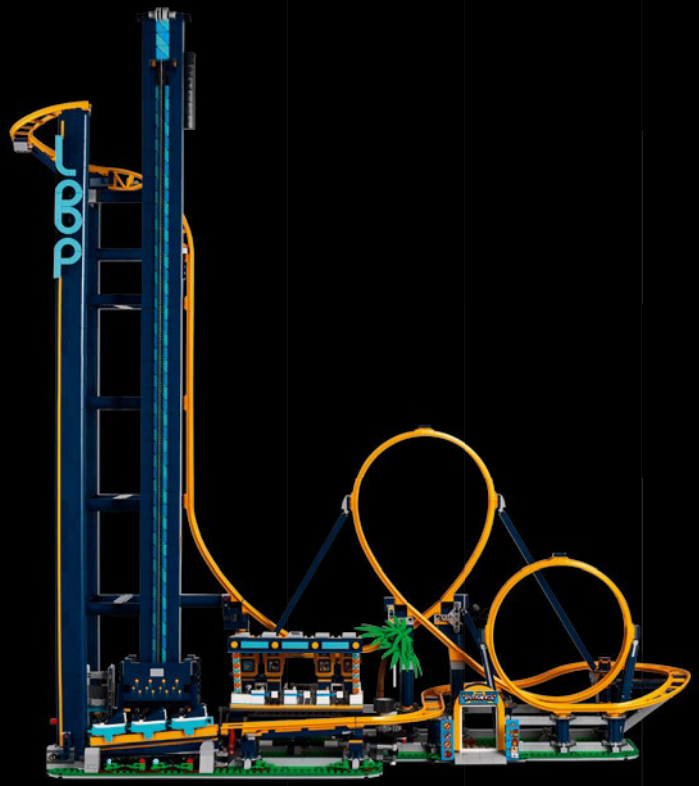

2022

10303 Loop Coaster

This gravity-defying thrill ride turns the fairground upside-down with two looping inversions, an innovative lift tower and one massive vertical drop! Three new track pieces extend the track system to go places never achieved before.

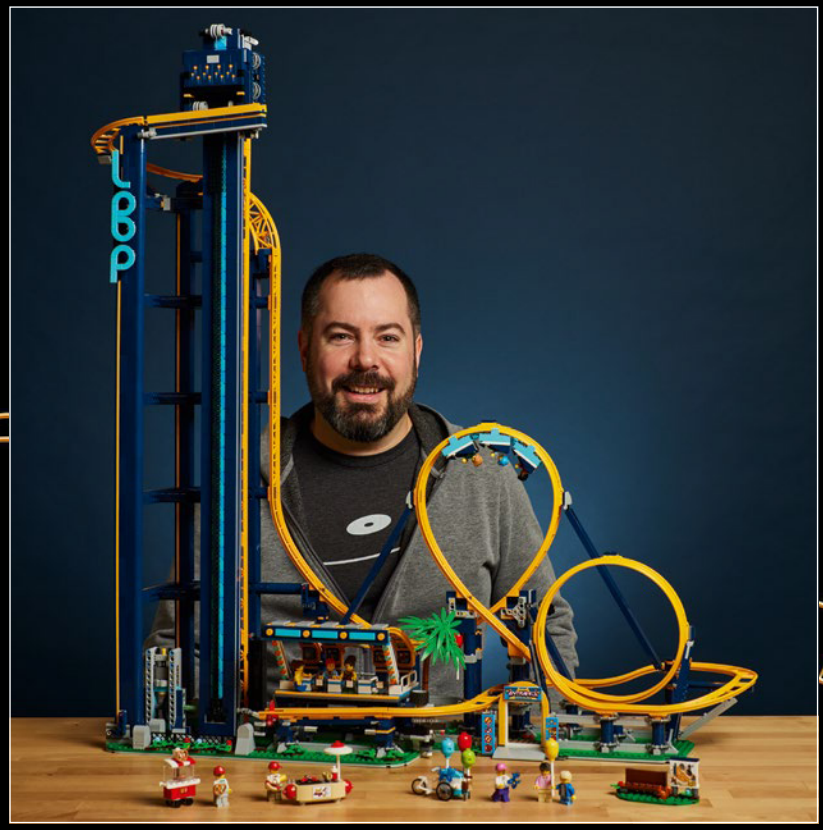

Senior LEGO® Designer, Pierre Normandin

FROM THE DESIGN TEAM

"Working on the Loop Coaster was quite a roller-coaster ride (pun intended!). It's the first time we set out to create a functioning loop feature in LEGO® elements, so a lot of my time was spent on establishing a track layout, defining the new elements that would be needed, plus figuring out all the correct measurements and mechanisms. I also had to ensure that the model's structure was both stable and aesthetically correct while also offering builders a fun yet challenging building experience. I loved adding in those small details such as the "Are you tall enough to go on this ride?" sign or the lost red balloon that's attached to the ride. It's what brings the model to life."

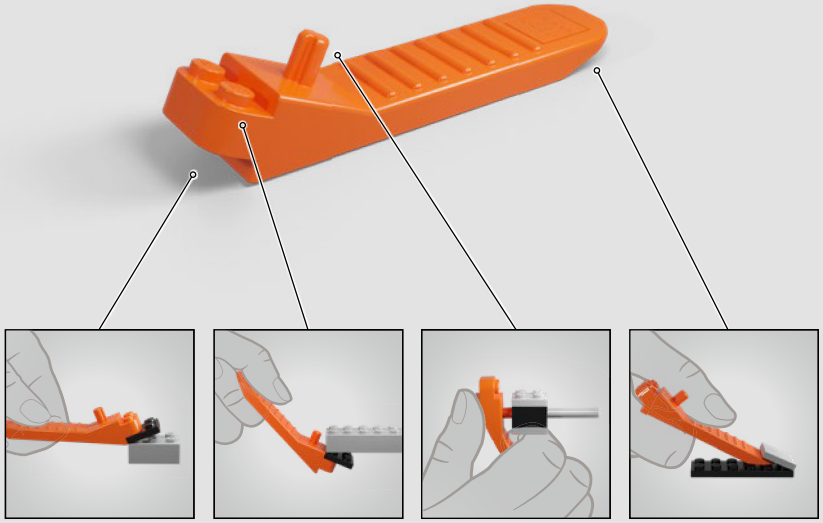

1

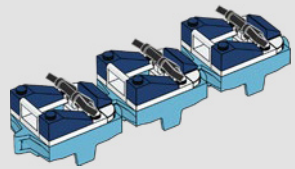

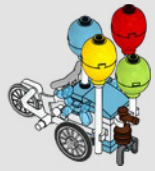

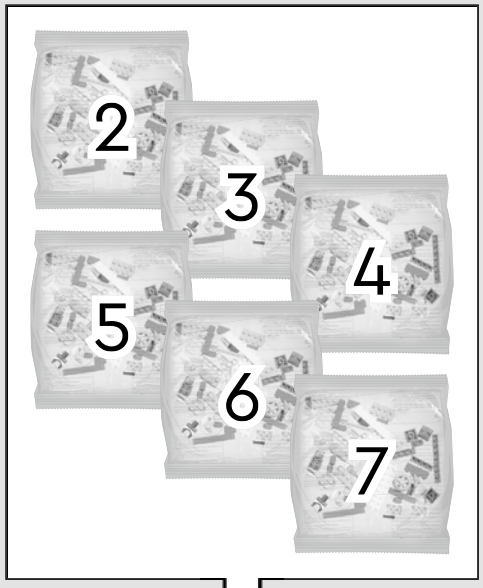
2
3
4
5
6
7

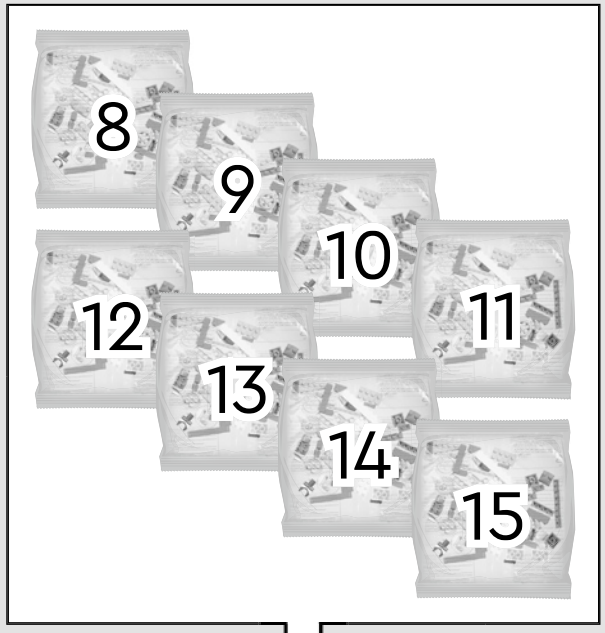
8
9
10
11
12
13
14
15

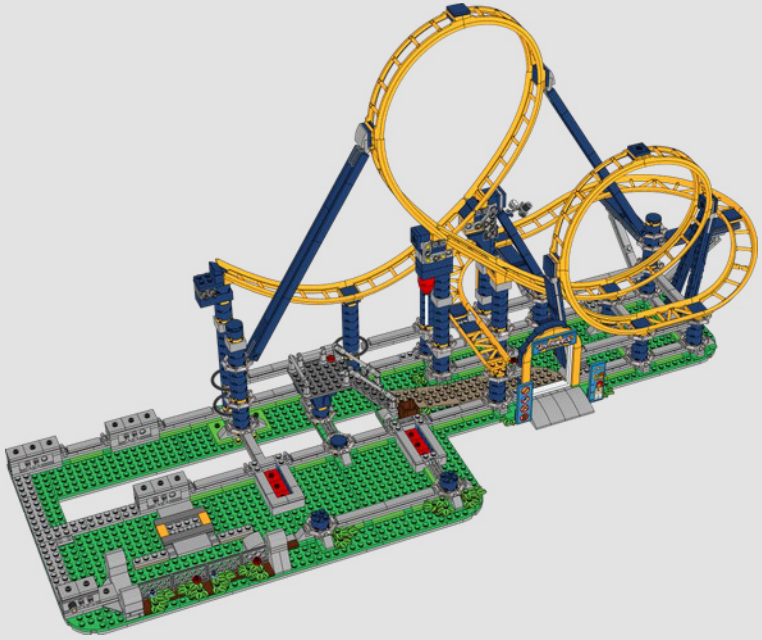

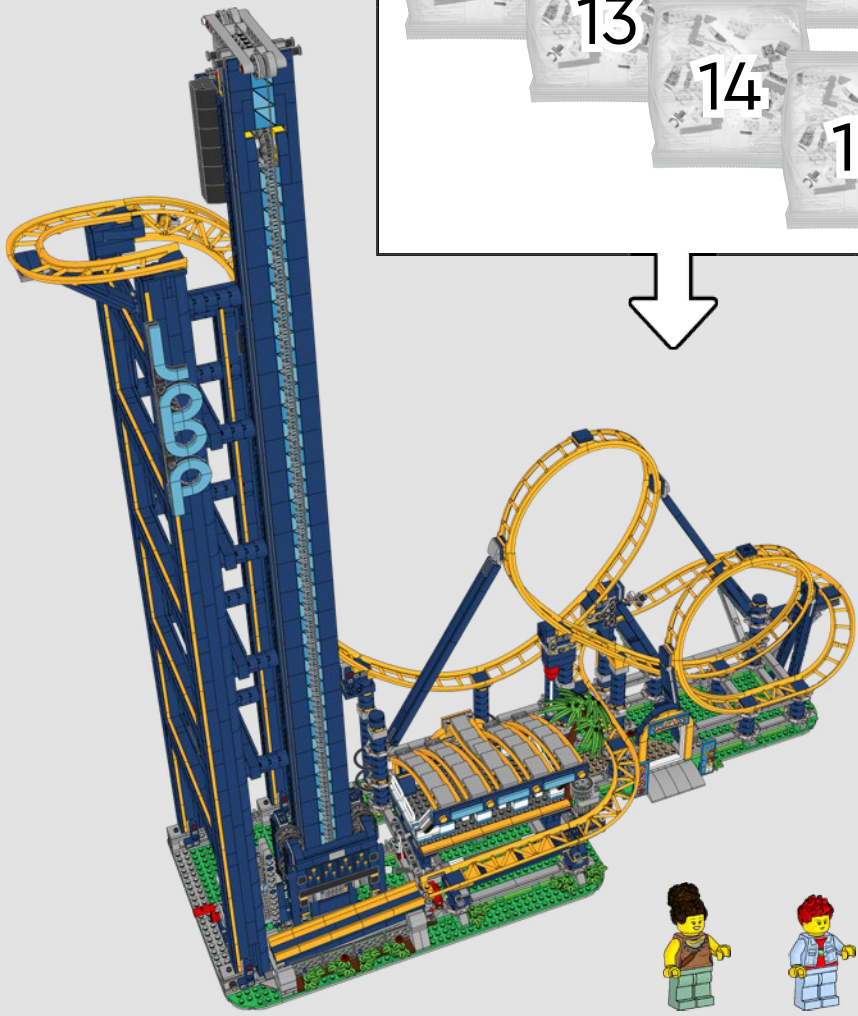
LBP

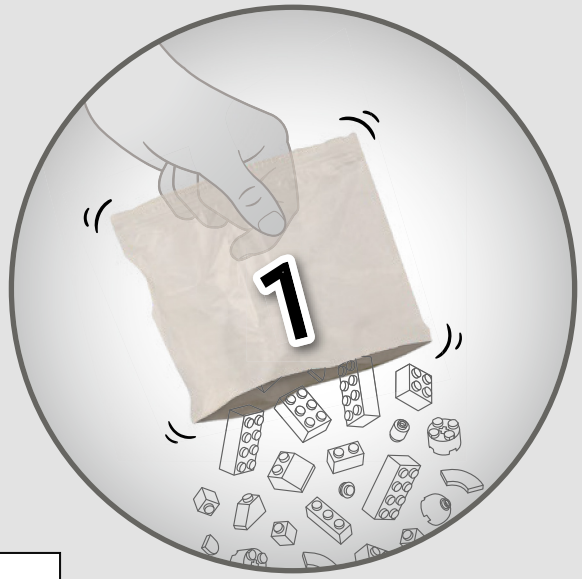
1

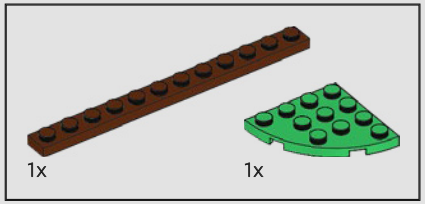

1

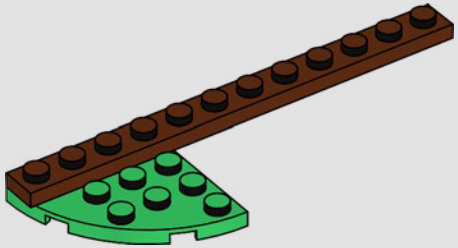

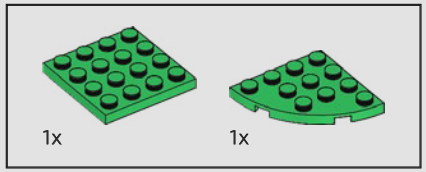

2

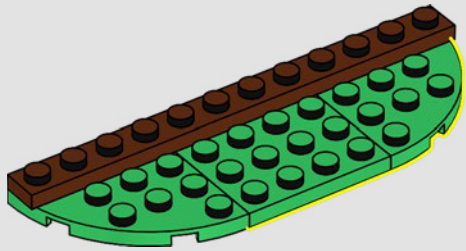

3

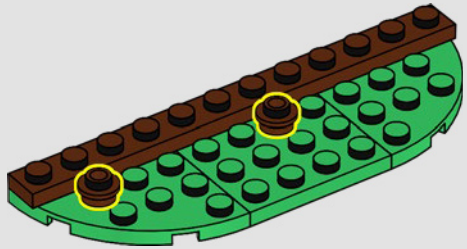

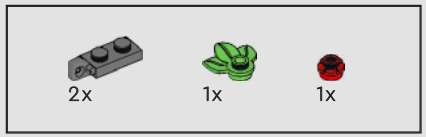

4

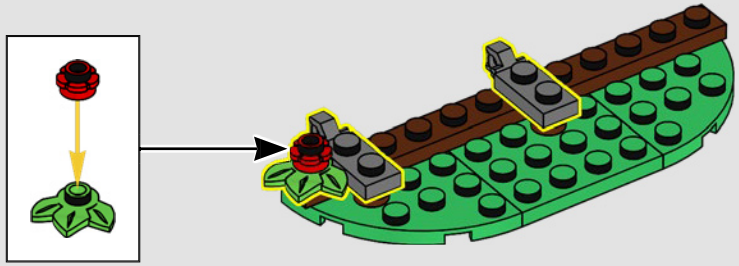

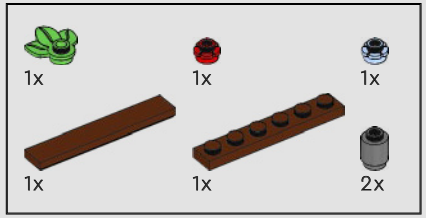

5

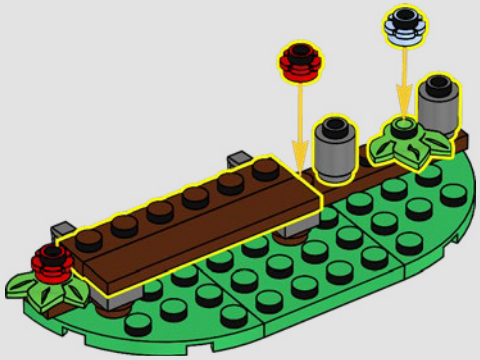

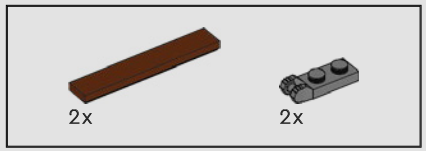

6

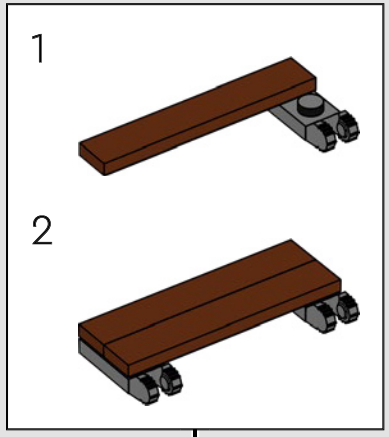

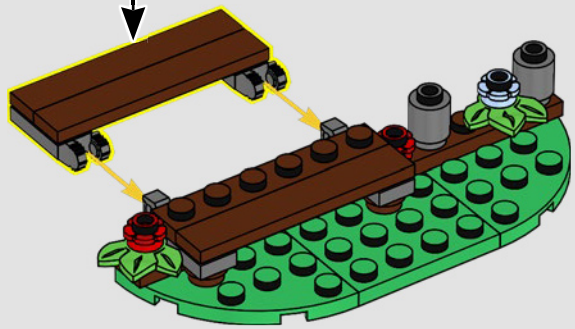

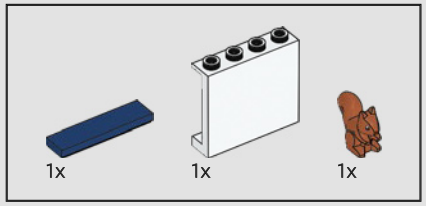

7

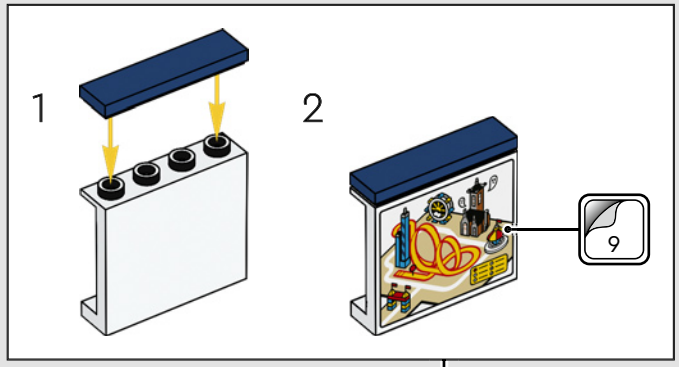

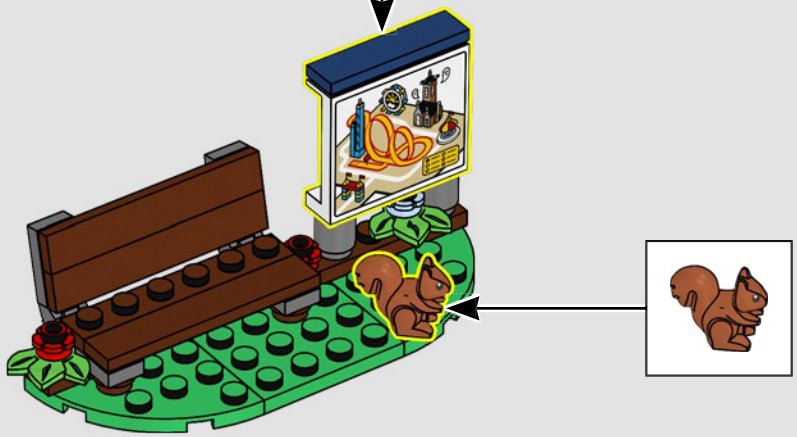

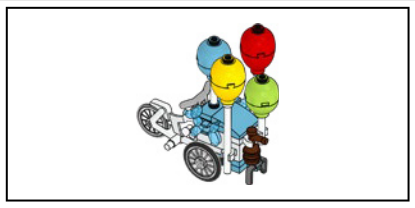

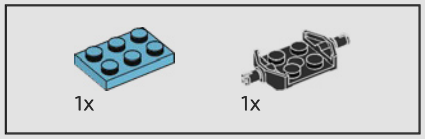

1

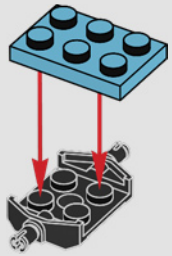

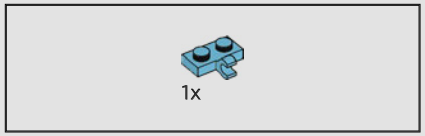

2

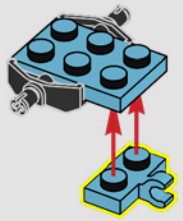

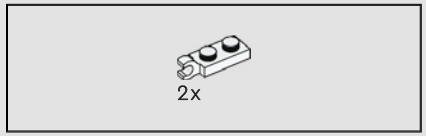

3

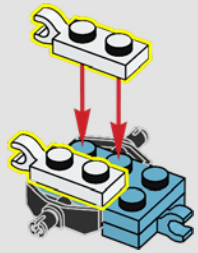

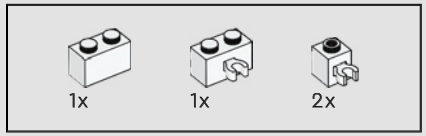

4

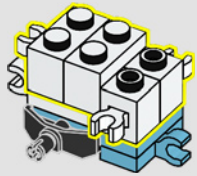

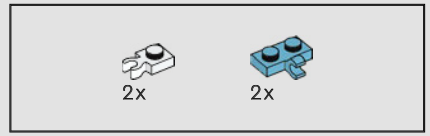

5

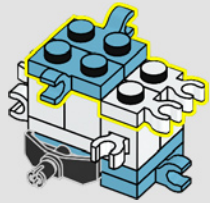

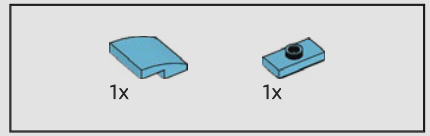

6

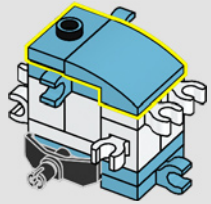

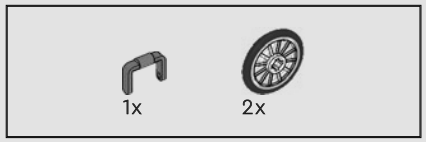

7

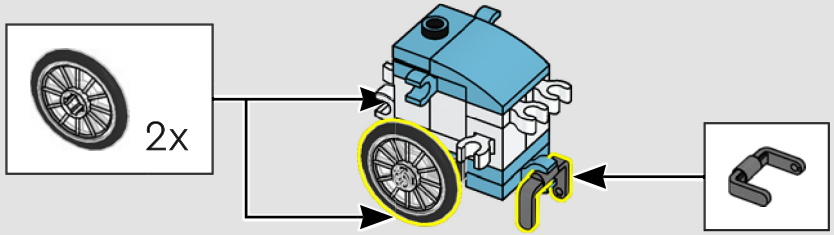

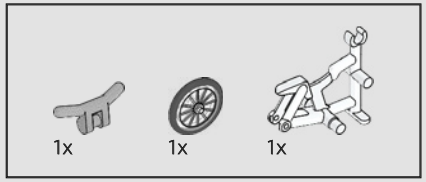

8

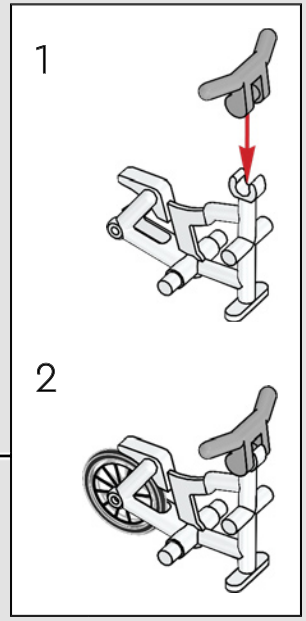

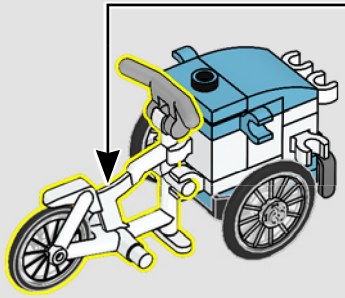

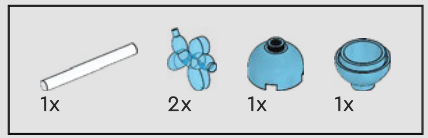

9

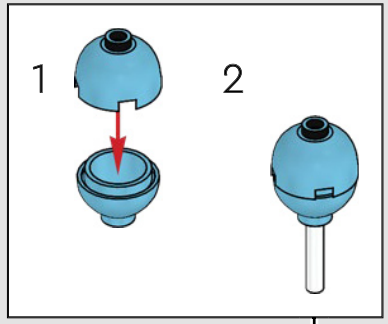

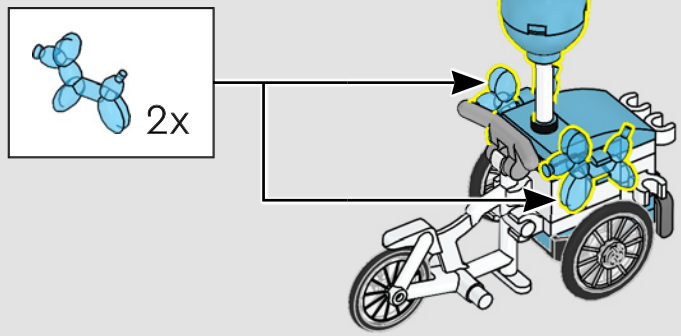

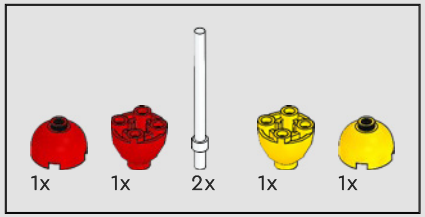

10

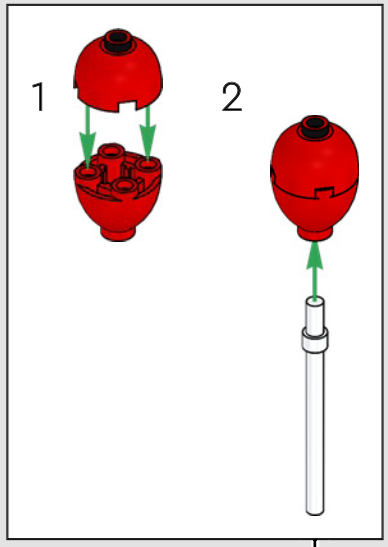

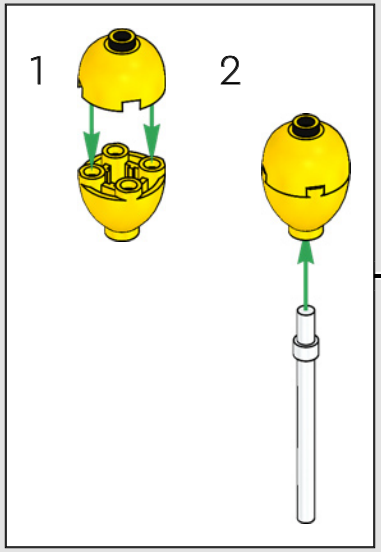

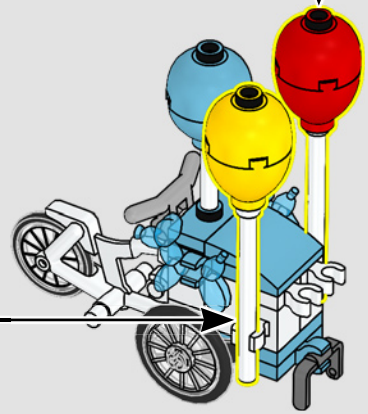

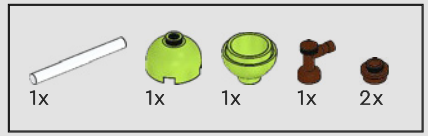

11

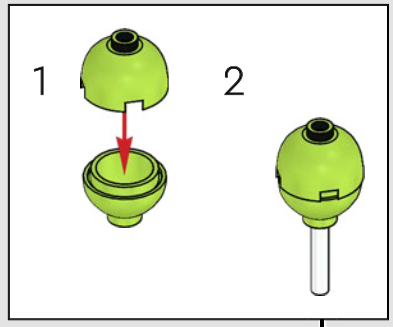

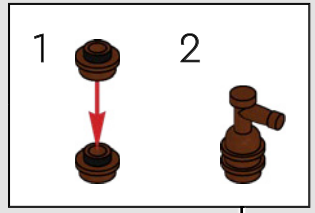

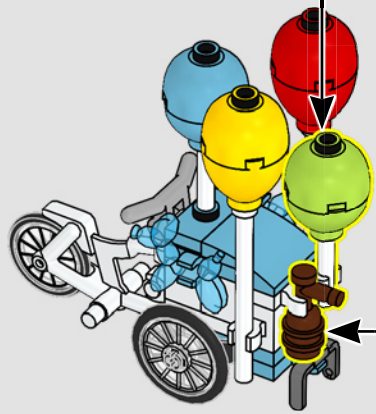

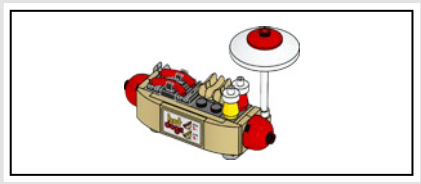

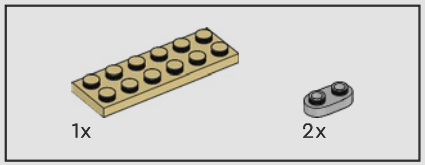

1

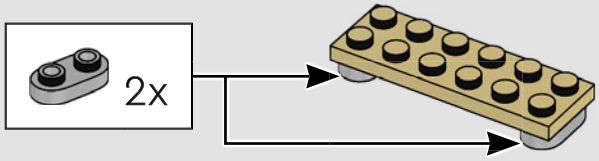

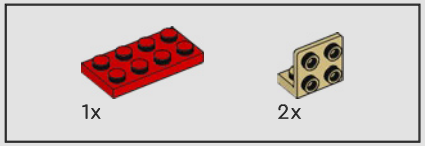

2

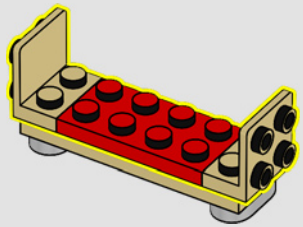

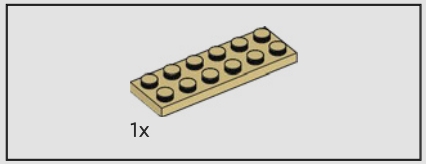

3

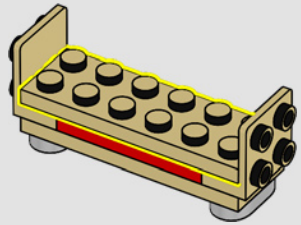

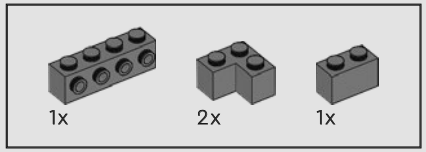

4

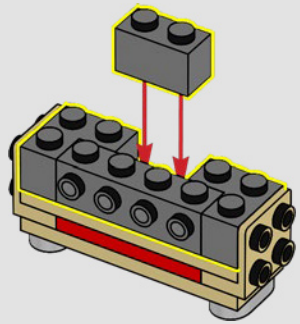

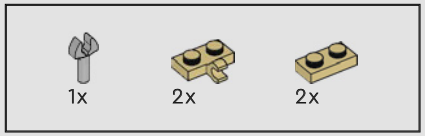

5

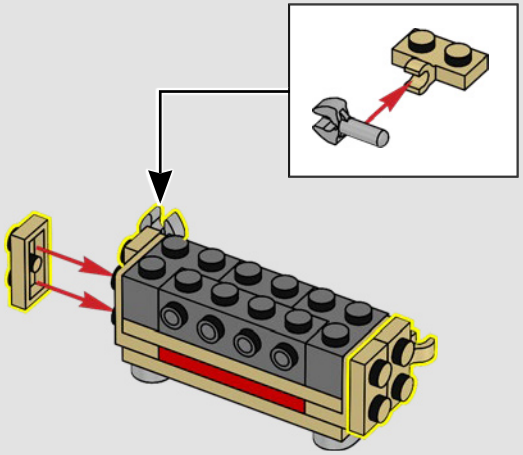

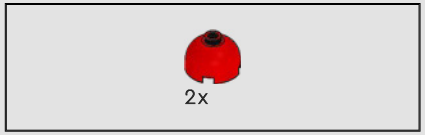

6

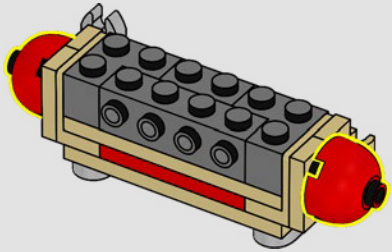

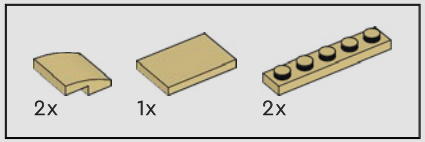

7

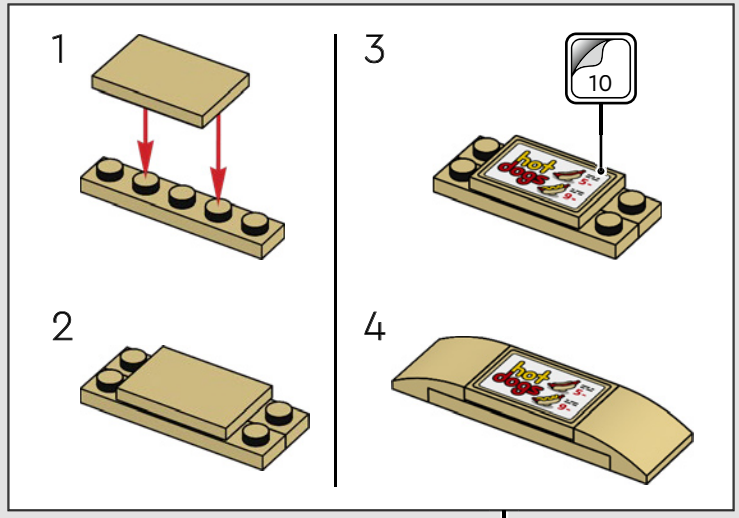

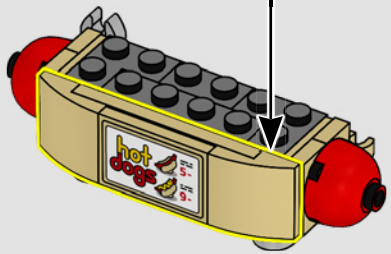

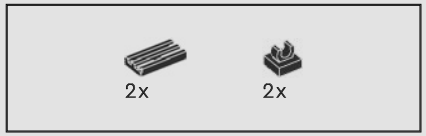

8

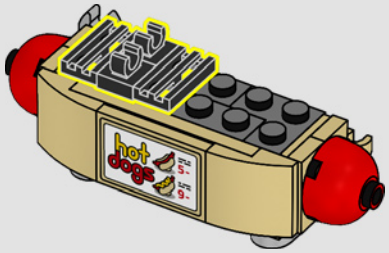

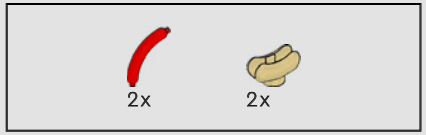

9

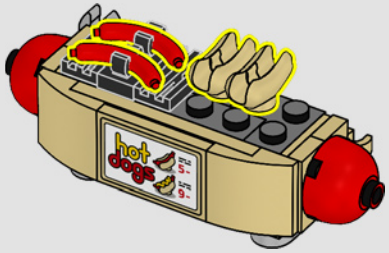

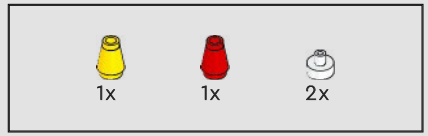

10

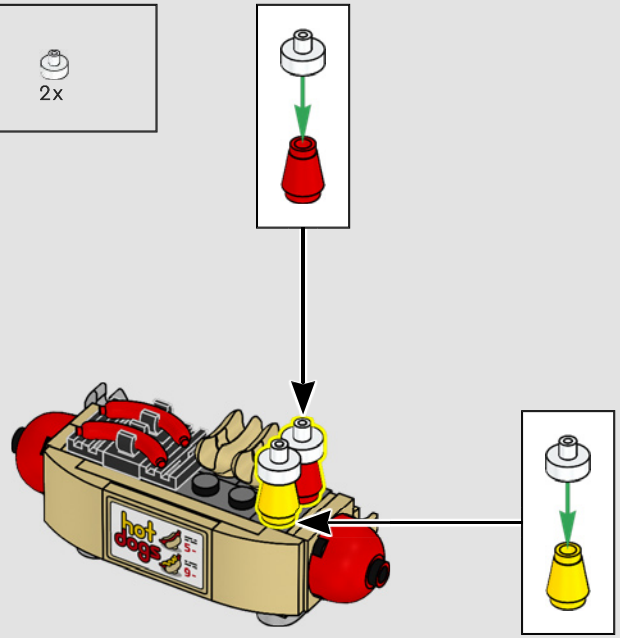

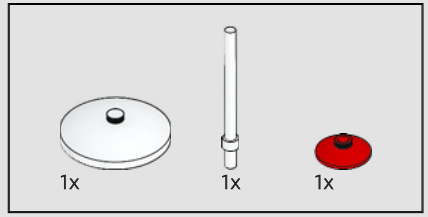

11

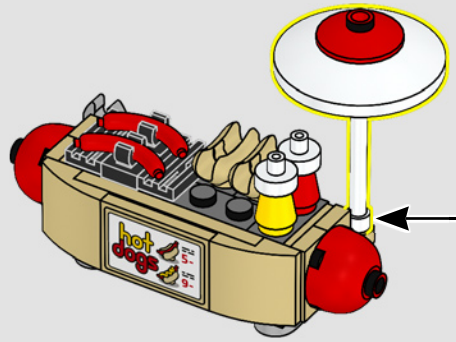

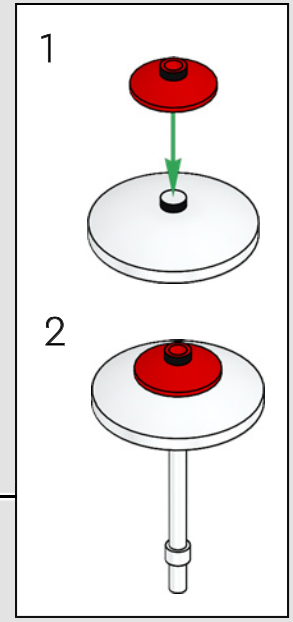

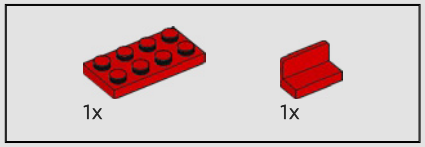

1

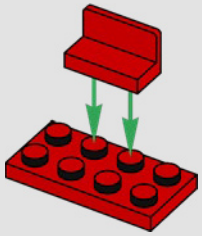

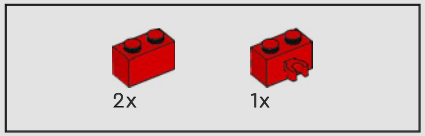

2

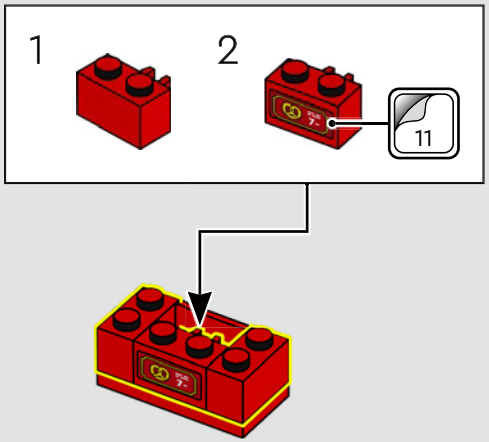

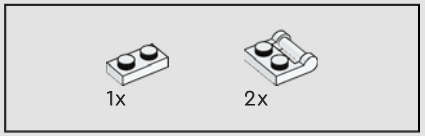

3

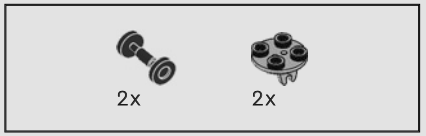

4

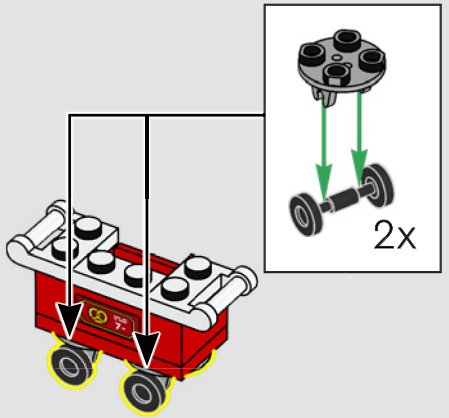

5

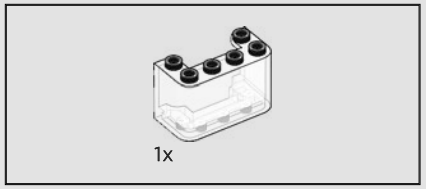

6

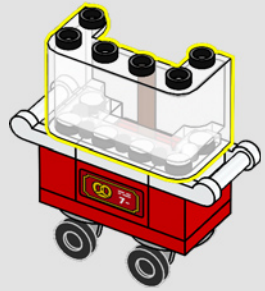

3x

7

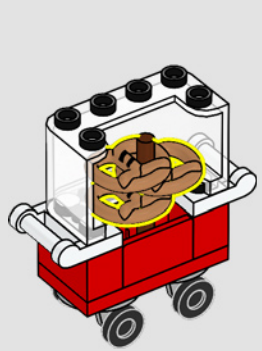

1x 1x 1x 1x

8

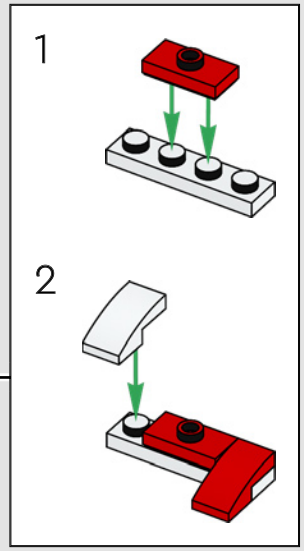

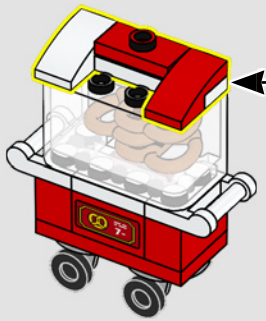

1x 1x

9

1x 1x

10

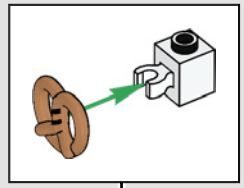

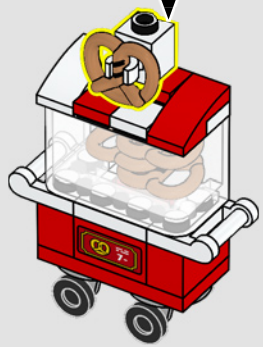

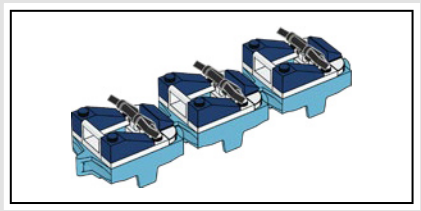

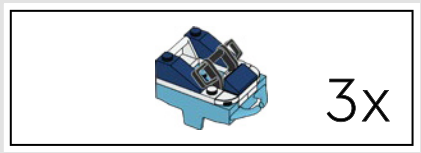

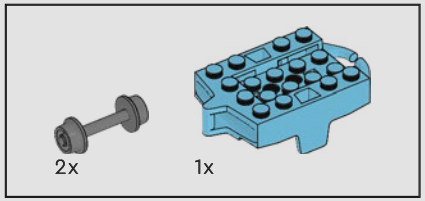

1

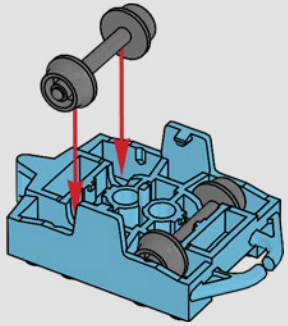

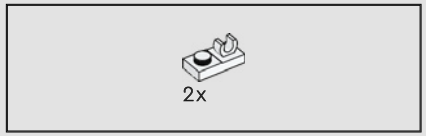

2

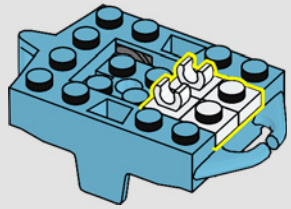

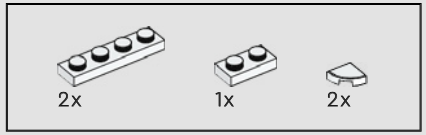

3

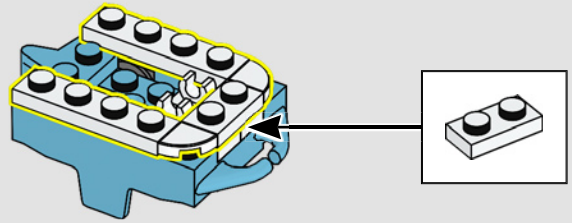

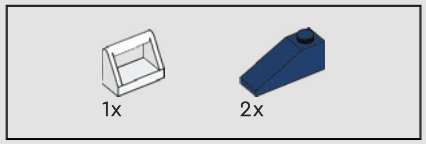

4

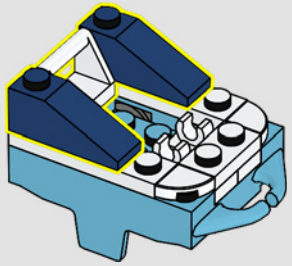

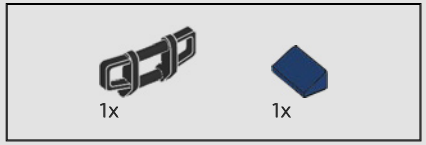

5

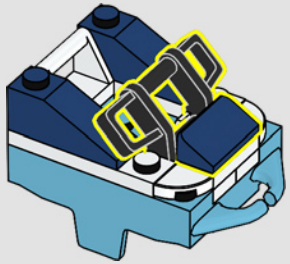

3x

6

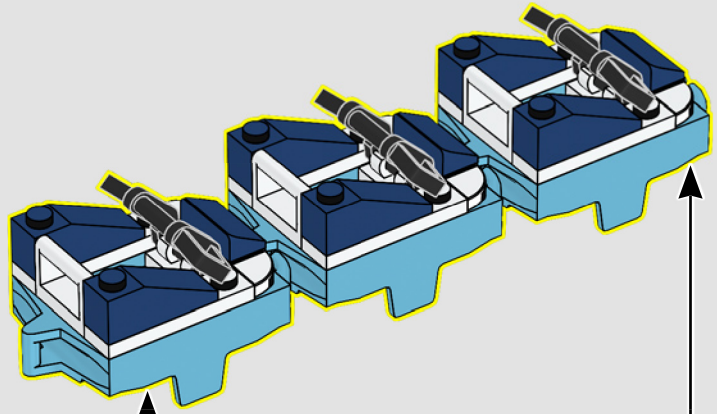

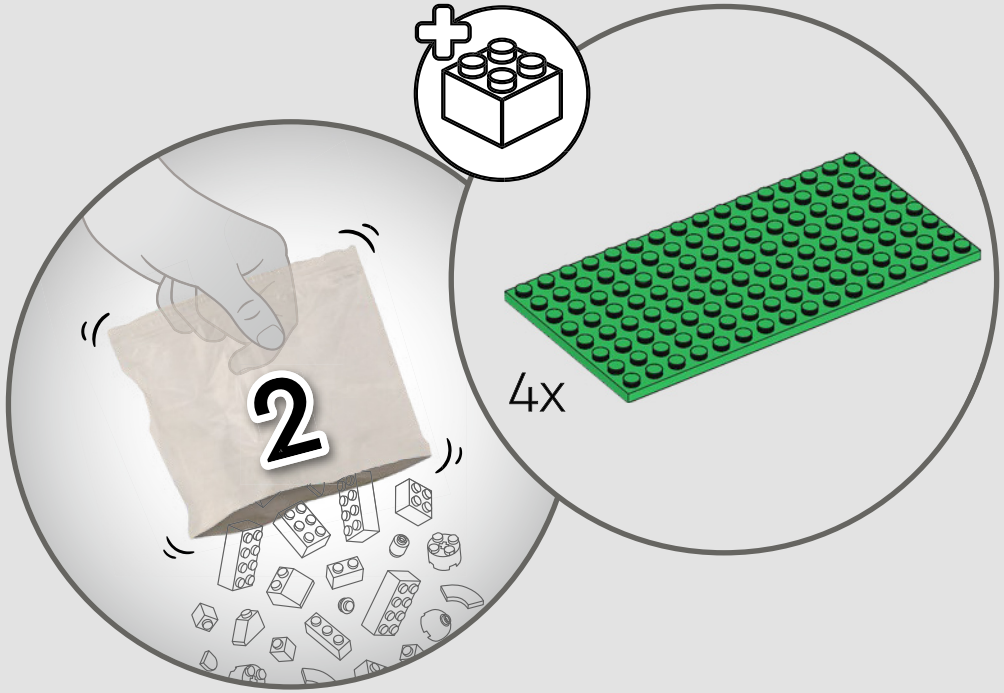

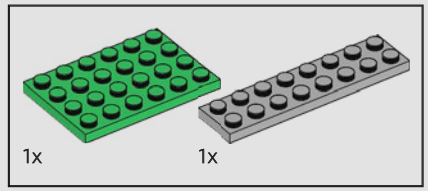

1

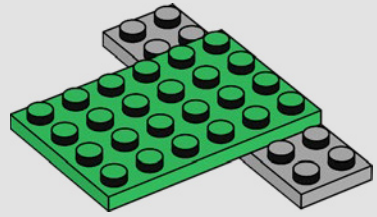

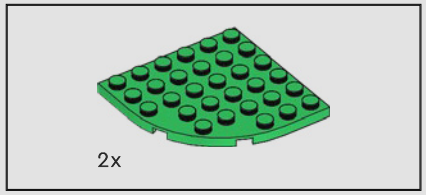

2

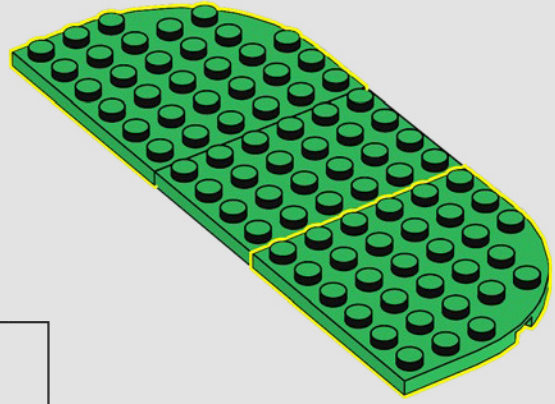

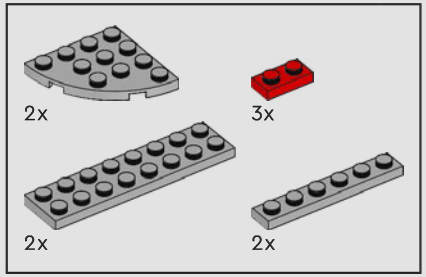

3

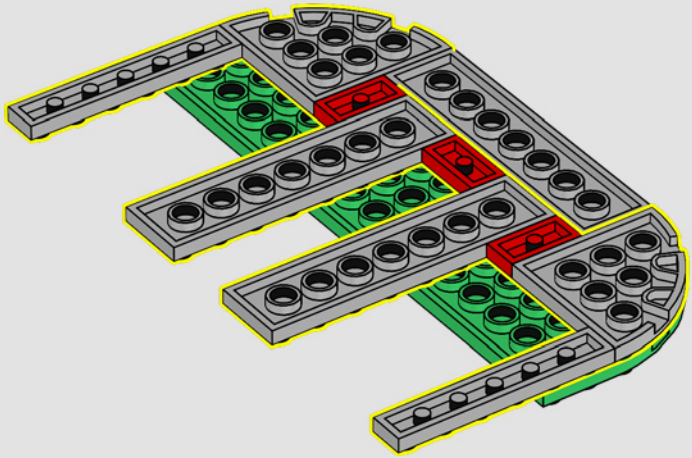

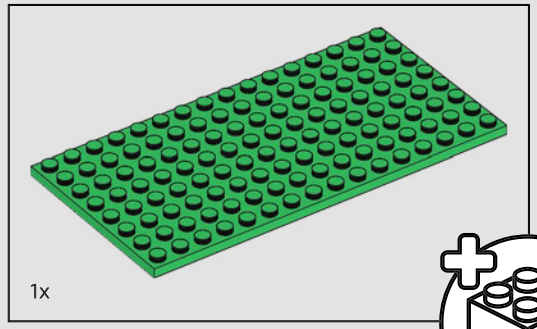

4

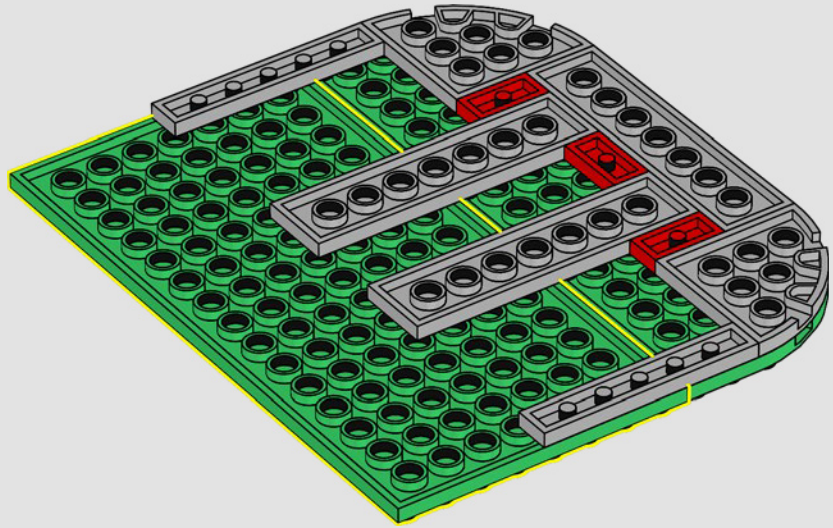

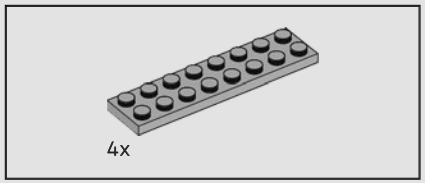

5

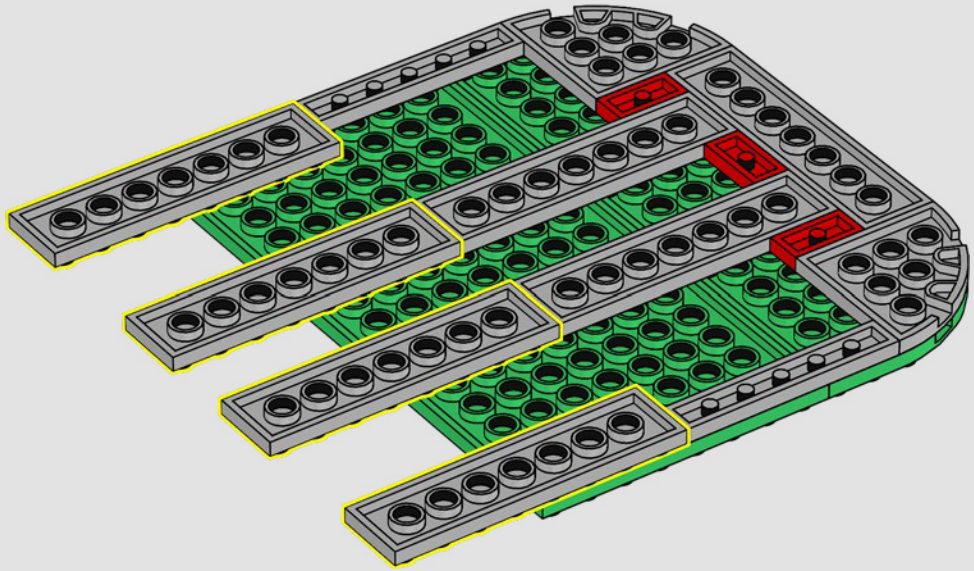

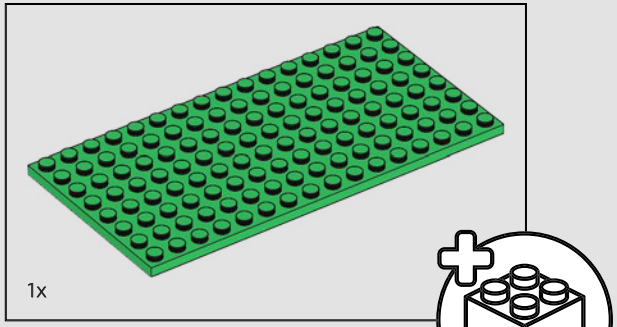

6

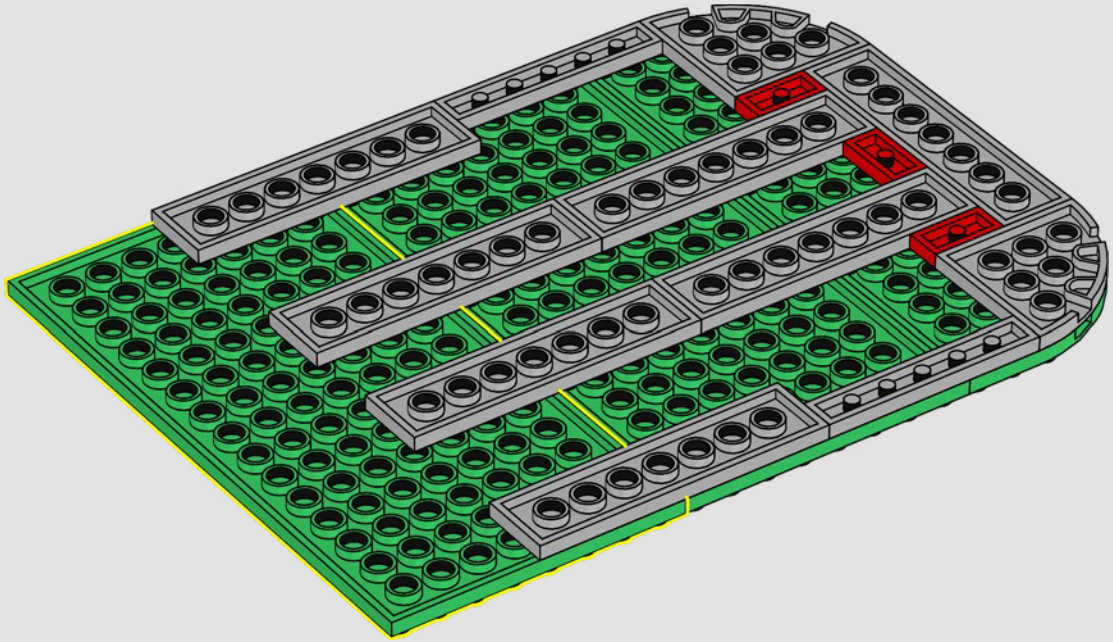

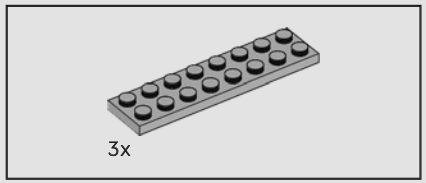

7

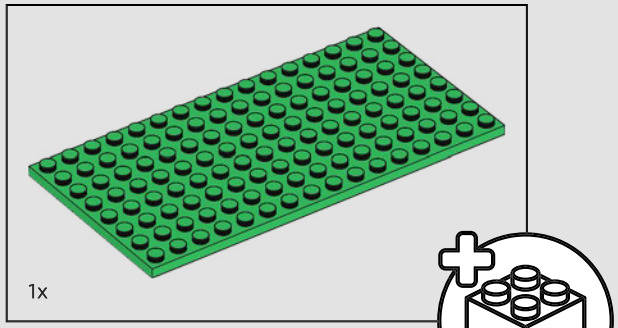

8

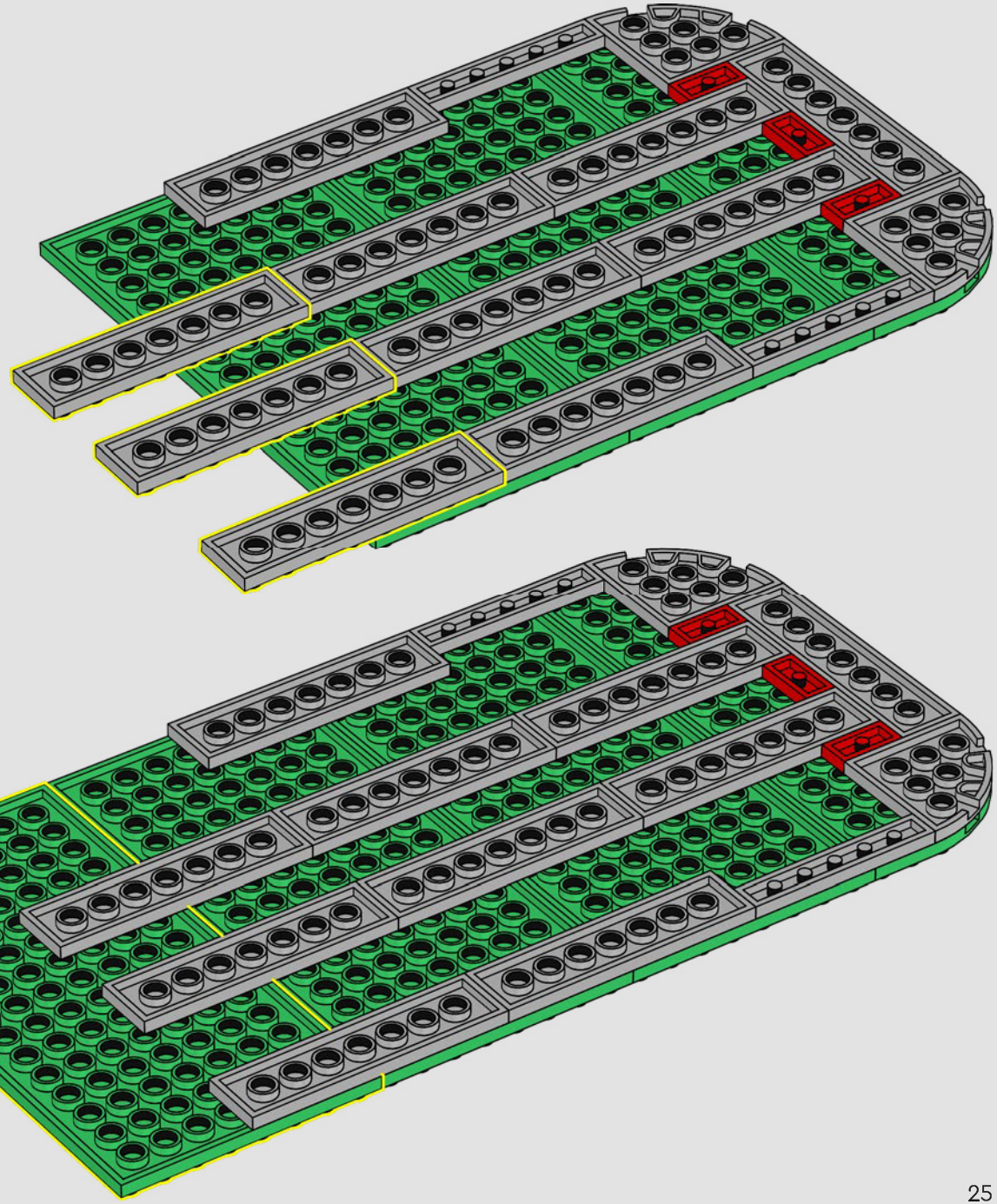

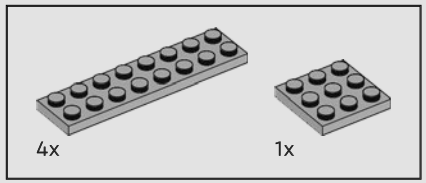

9

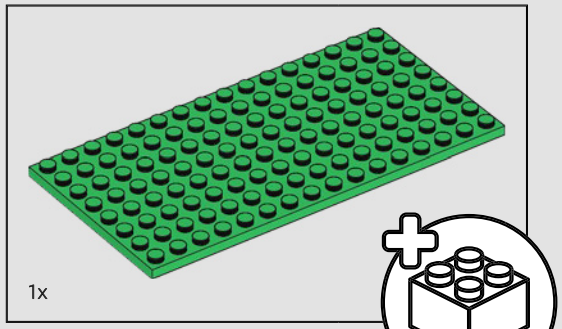

10

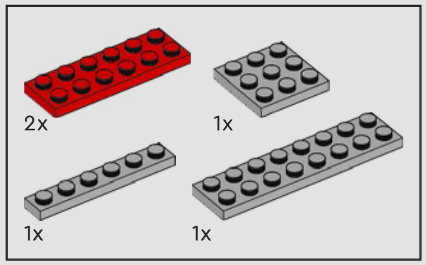

11

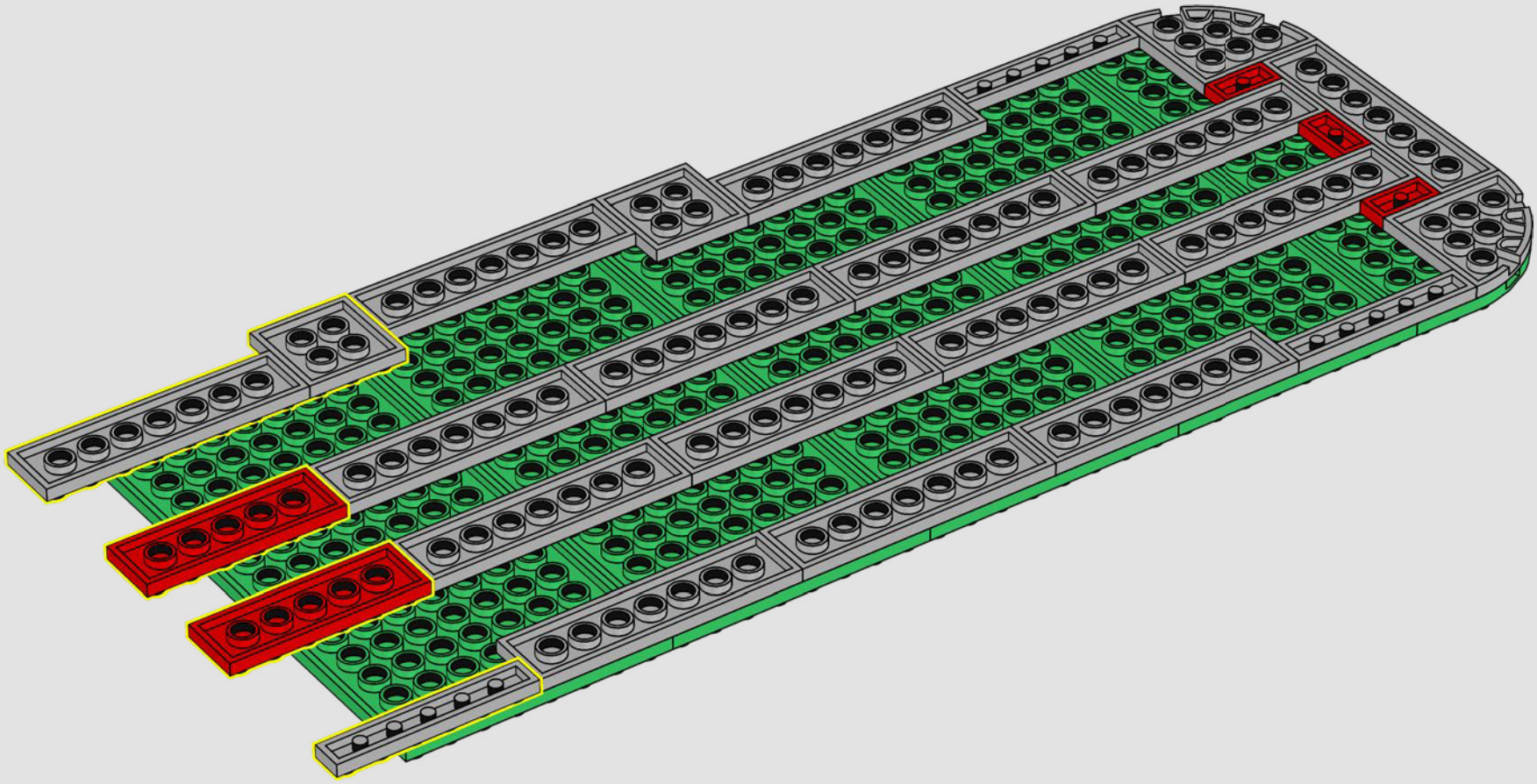

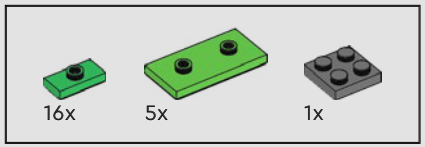

12

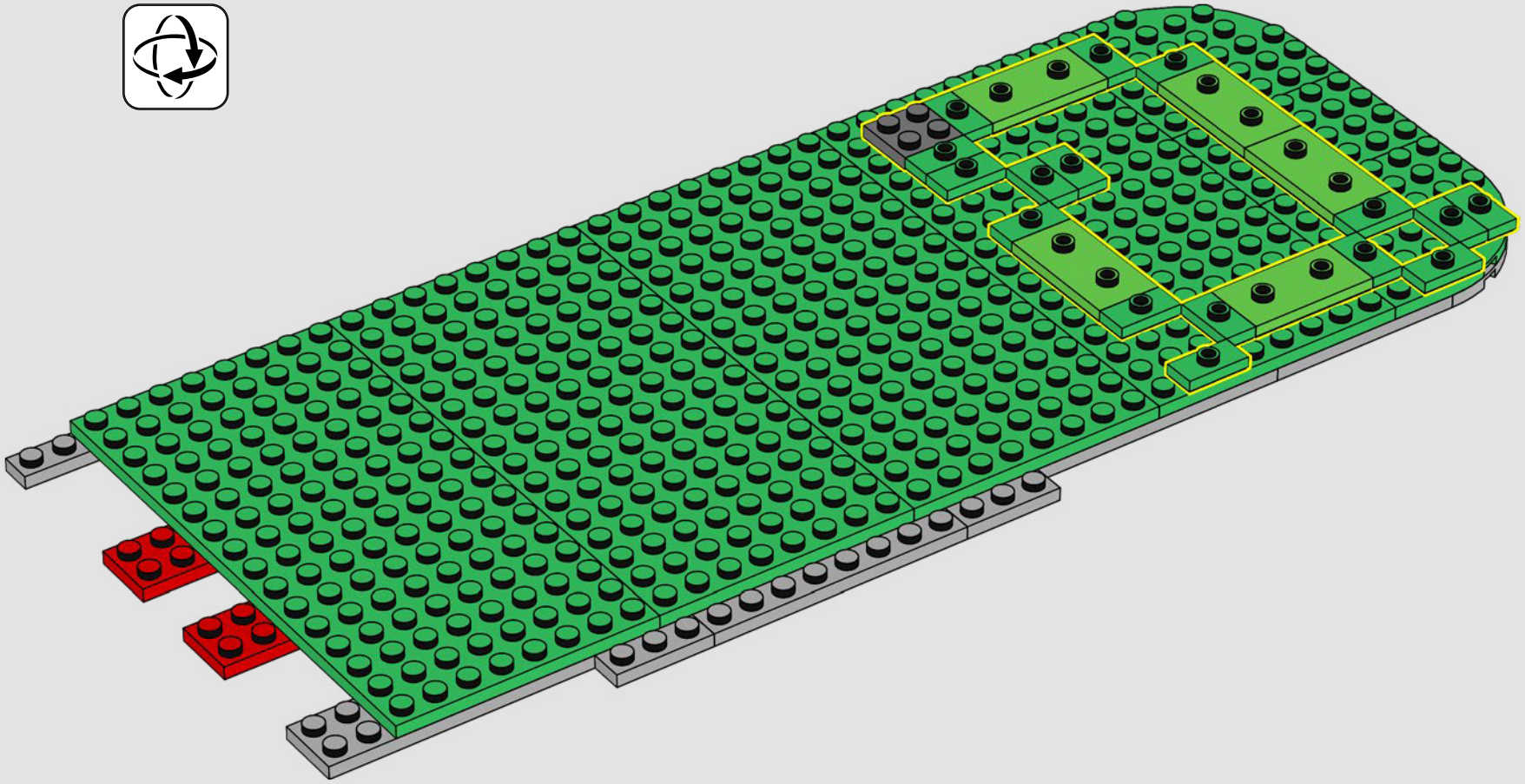

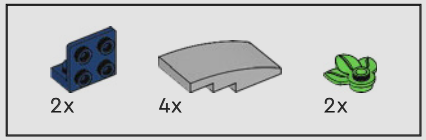

13

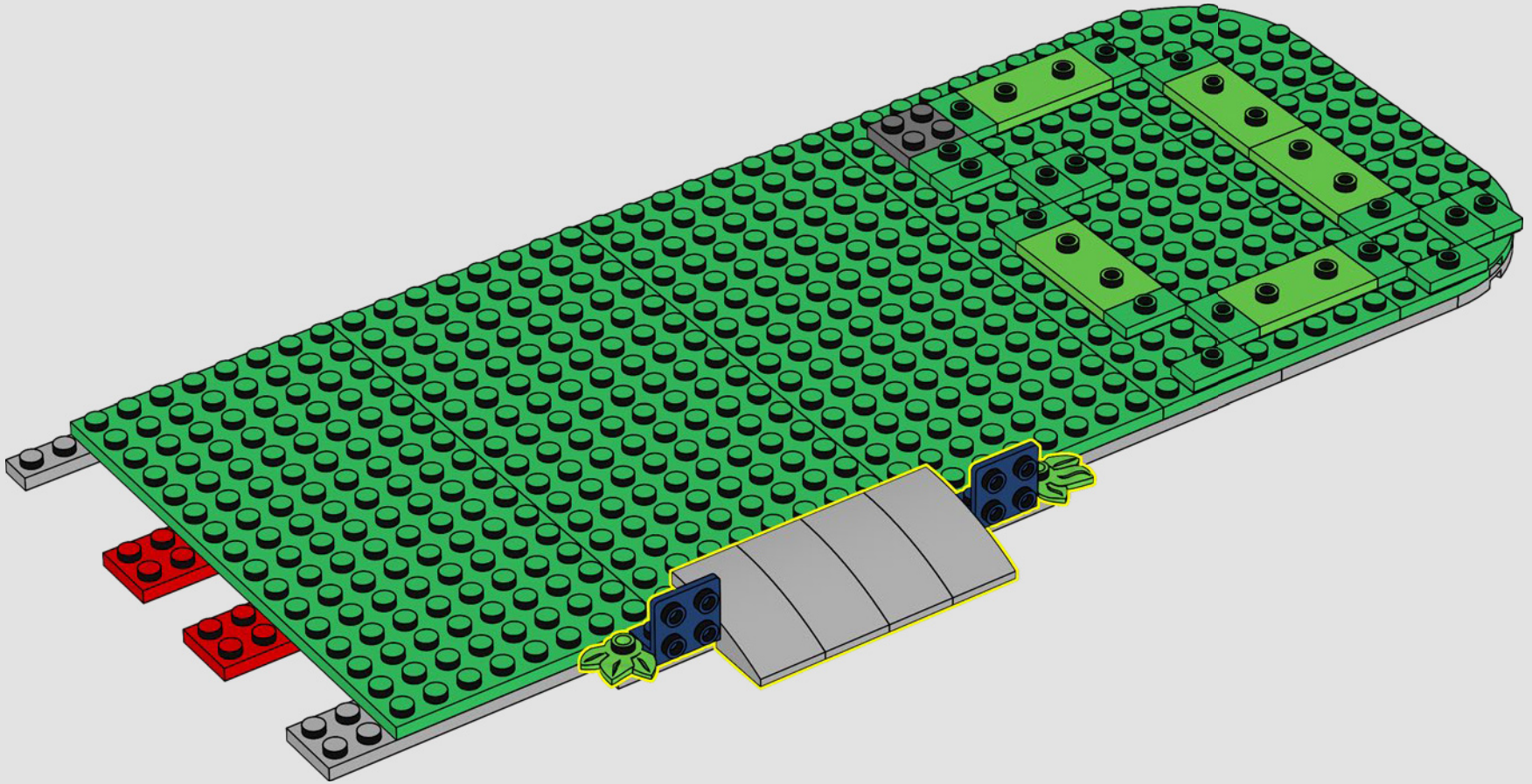

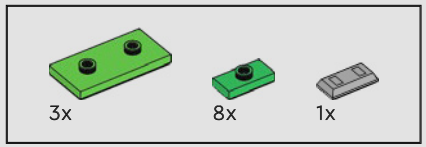

14

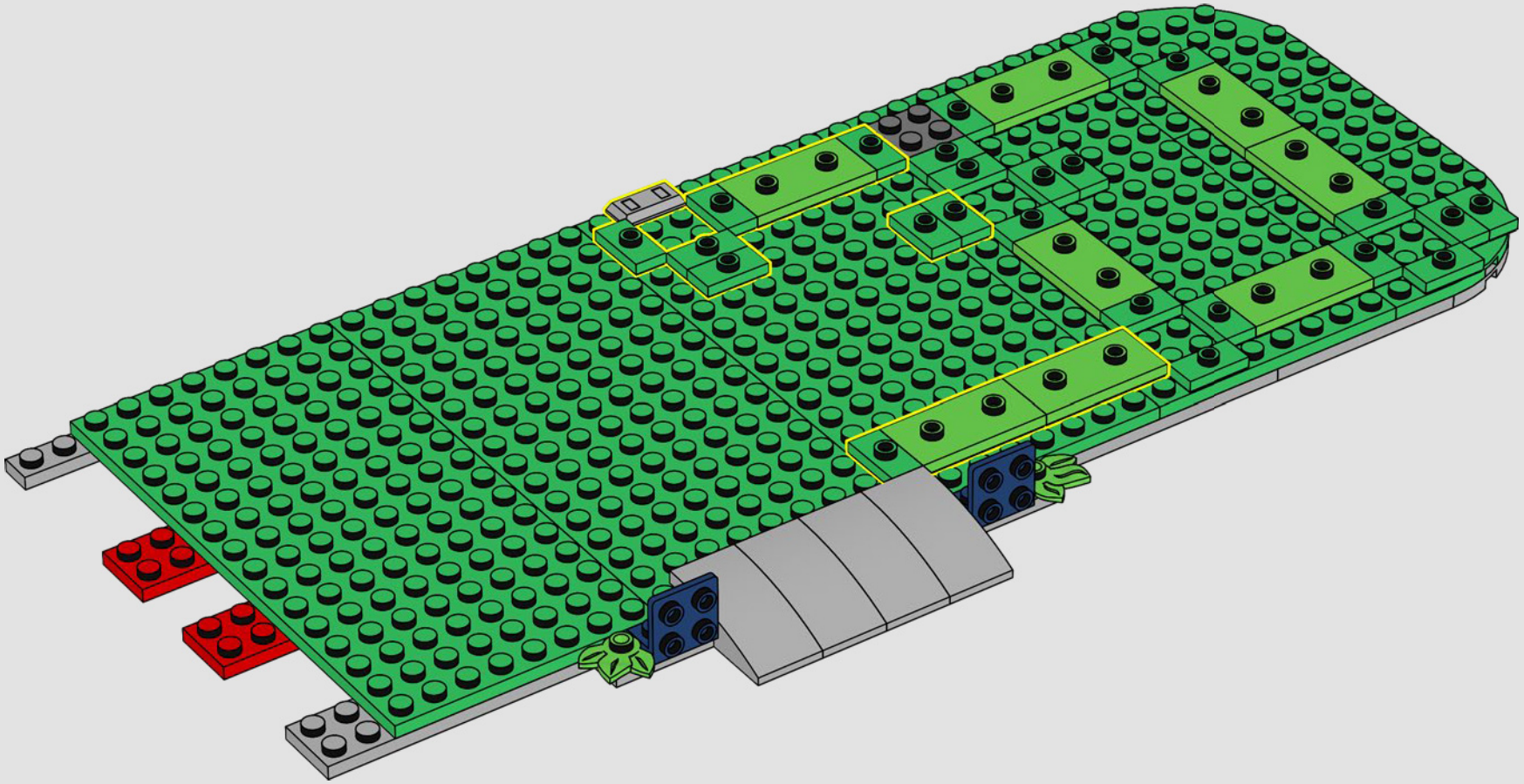

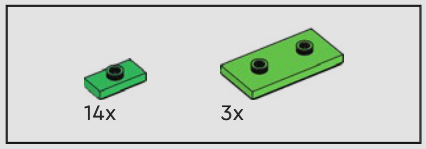

15

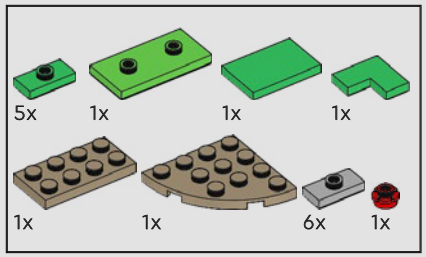

16

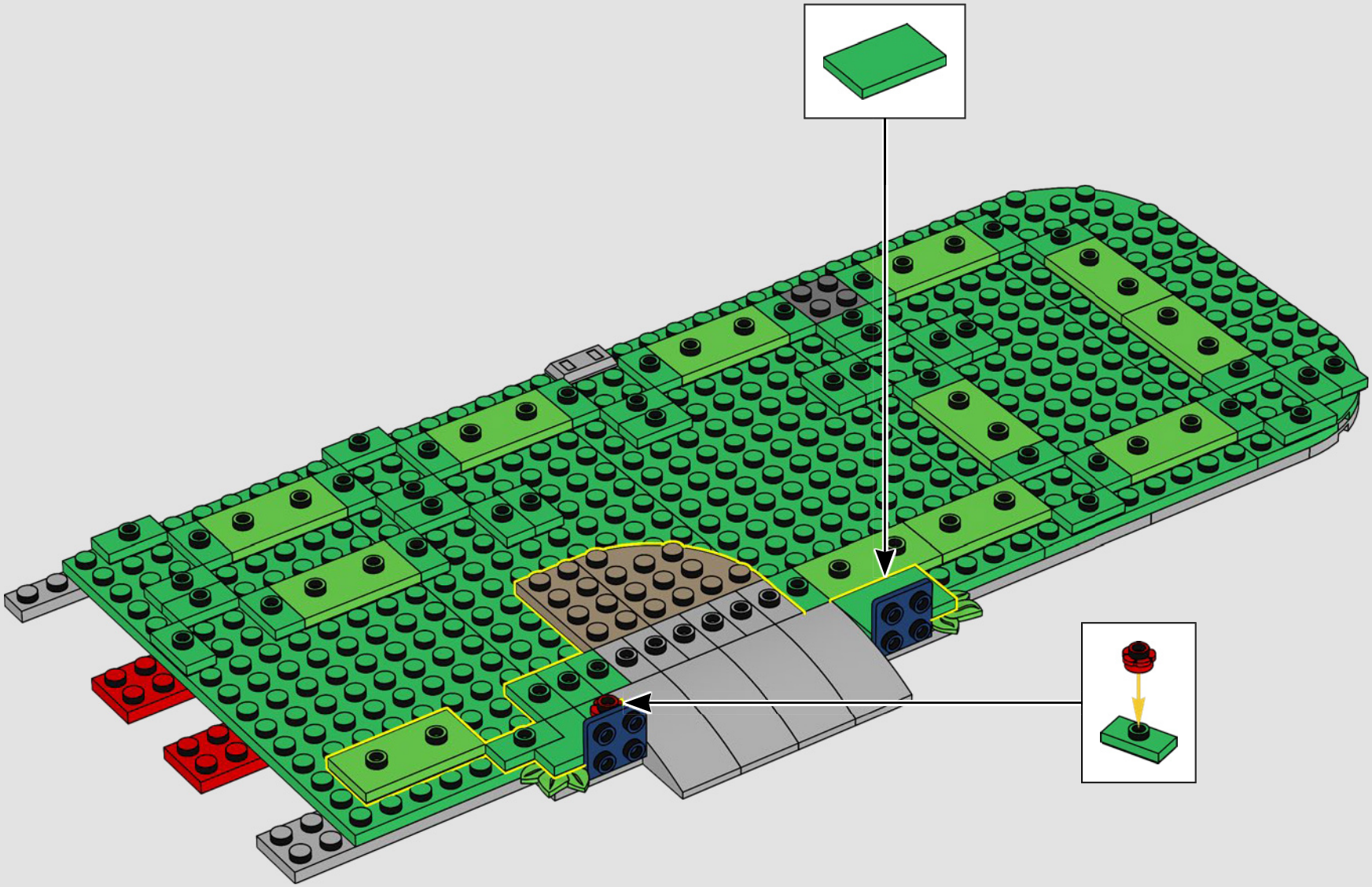

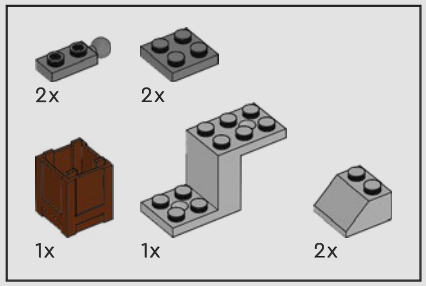

17

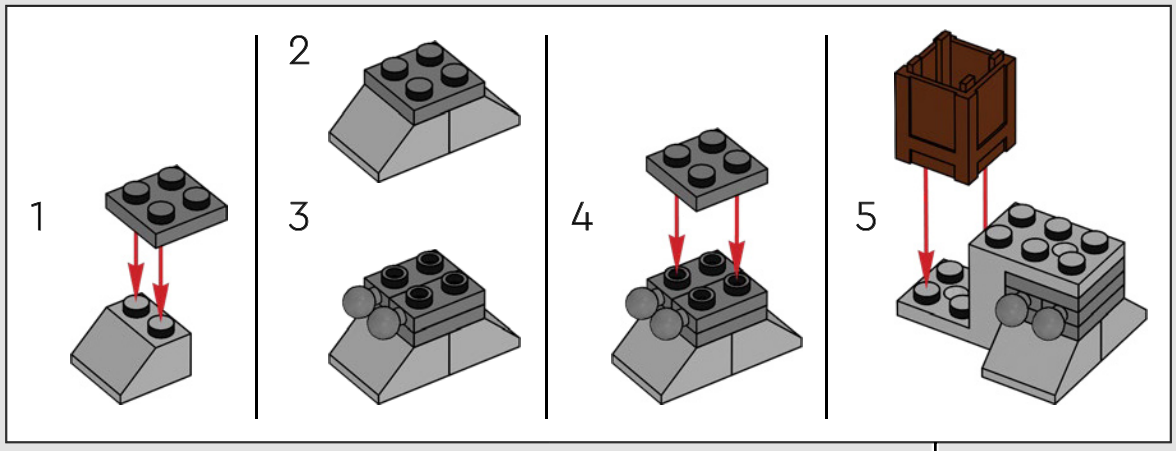

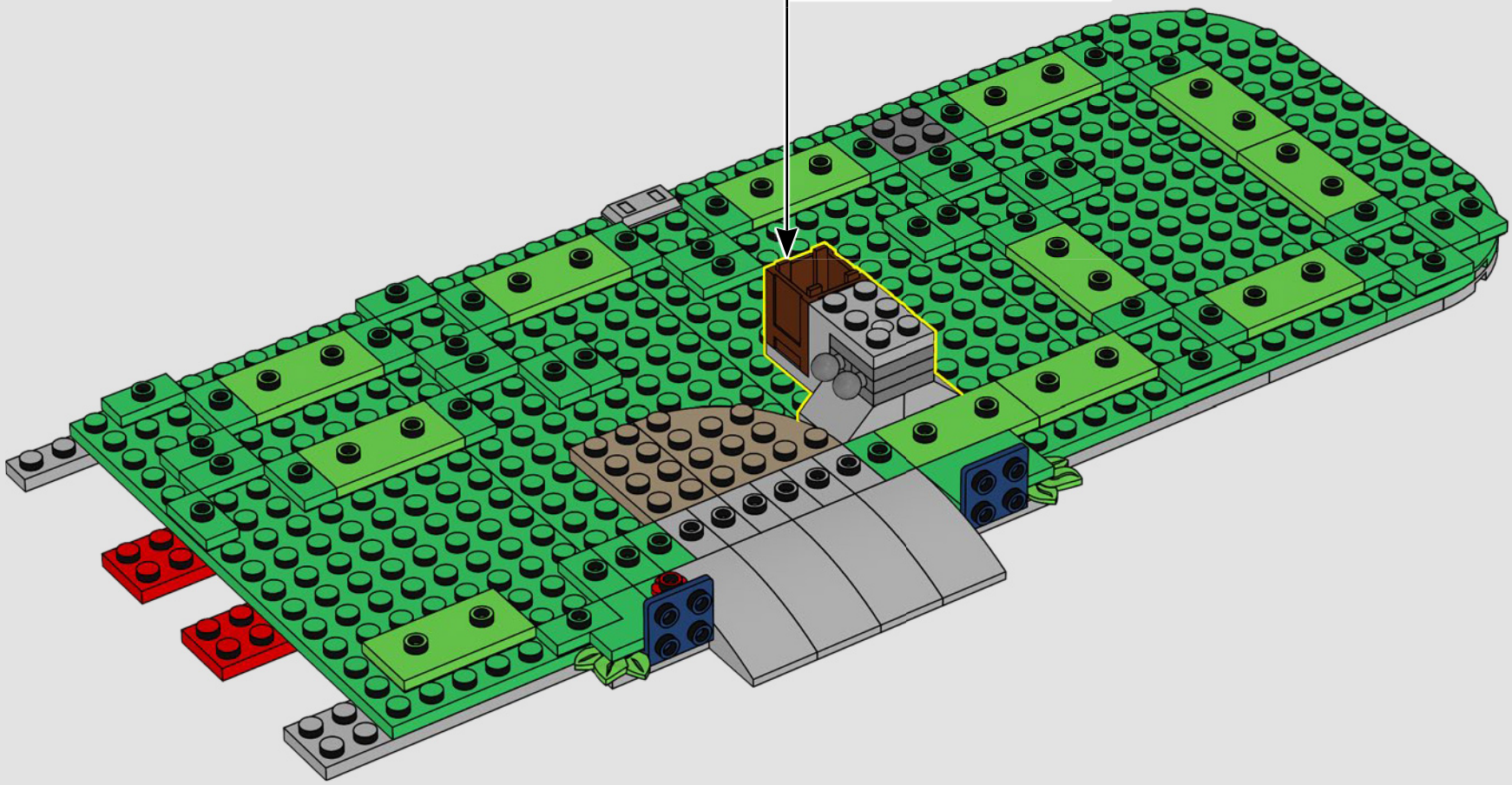

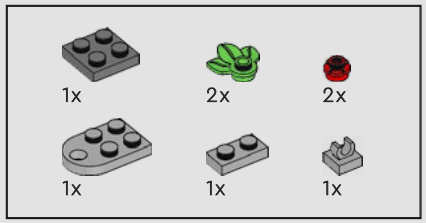

18

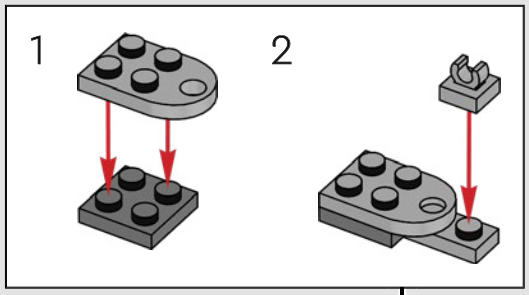

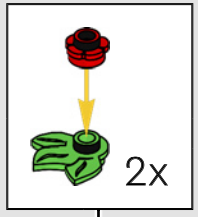

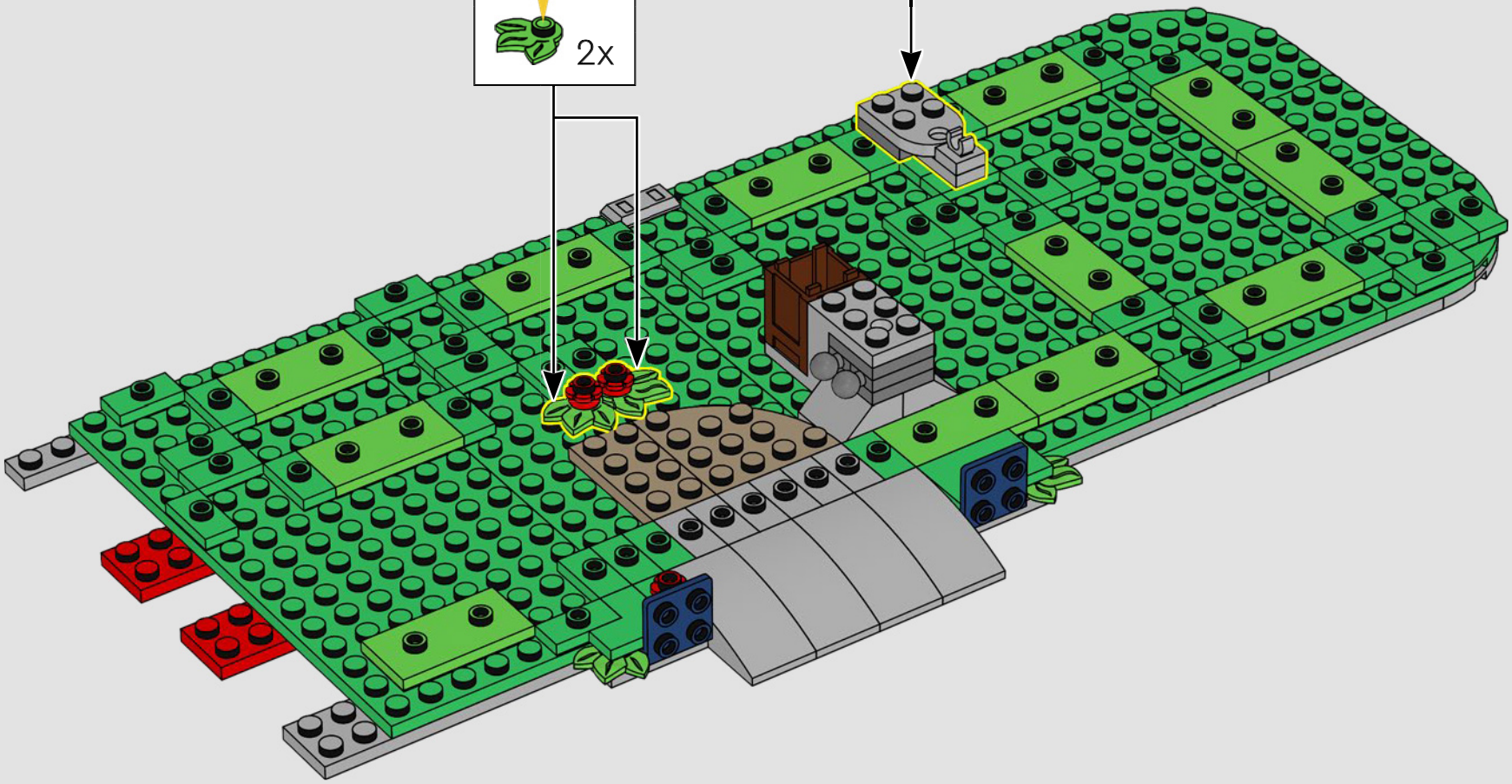

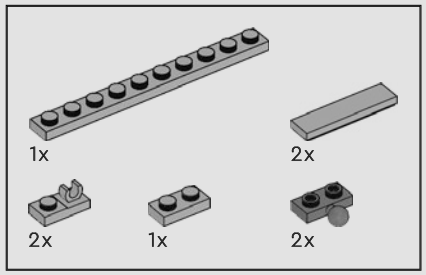

19

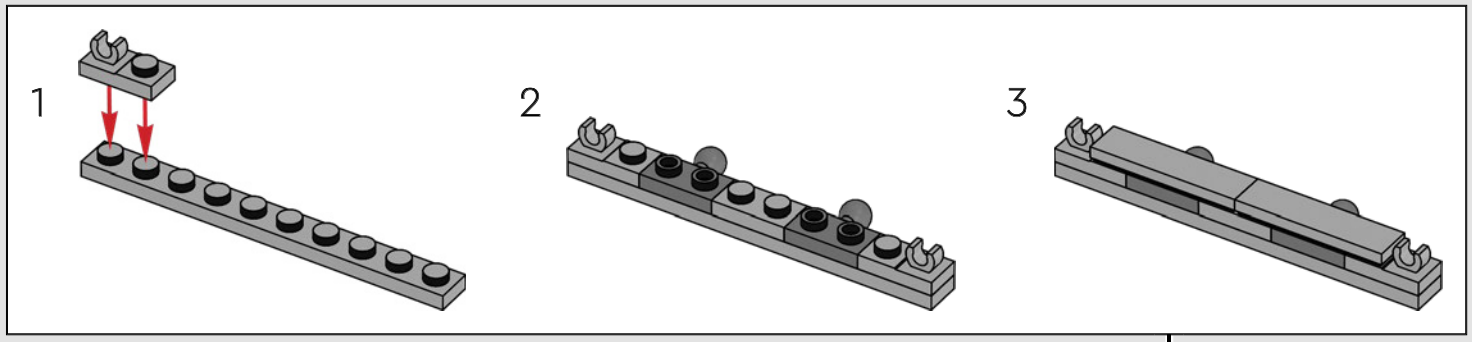

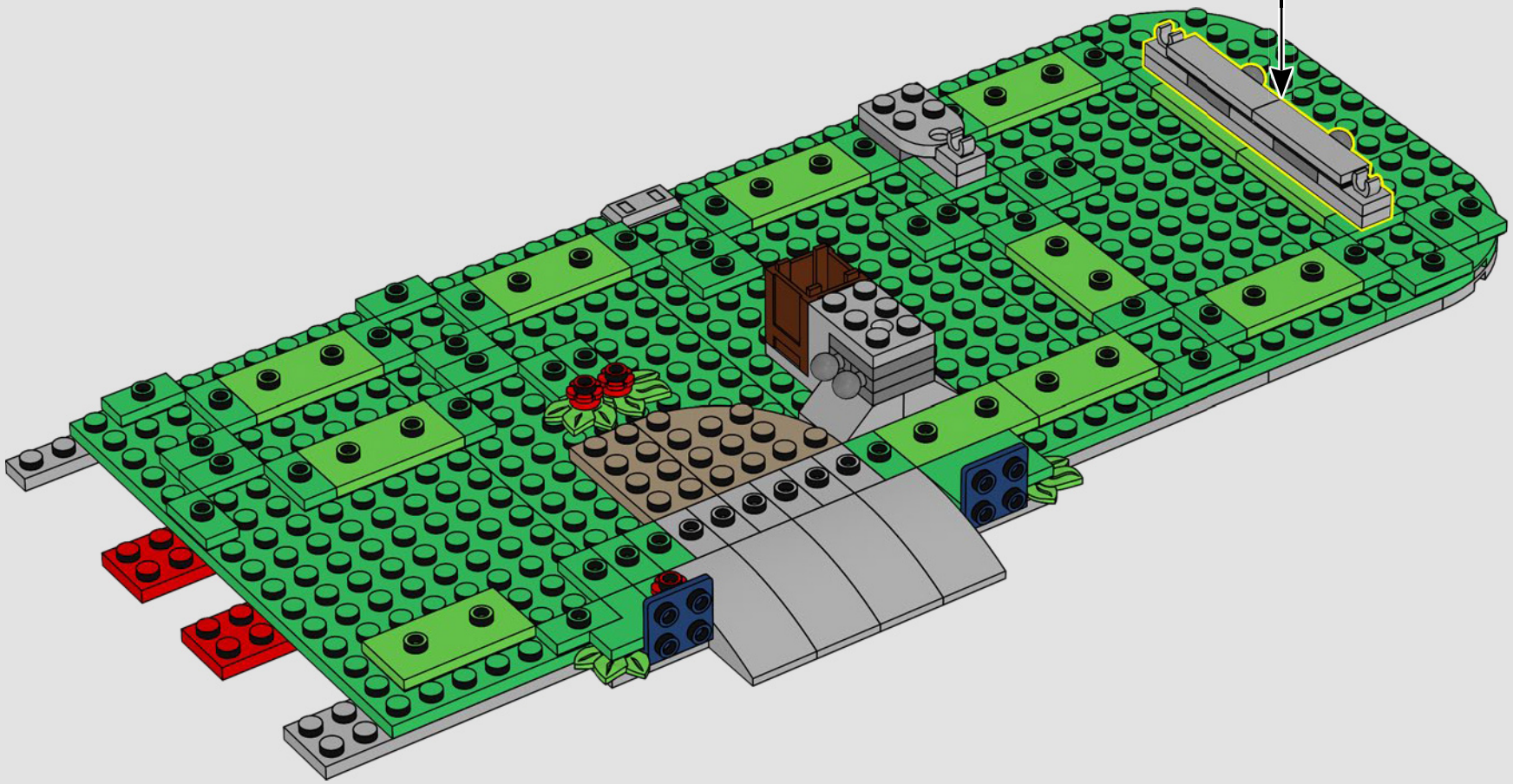

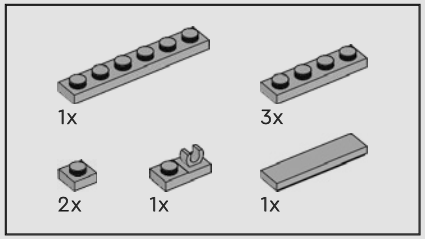

20

1

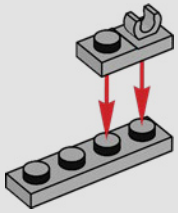

2

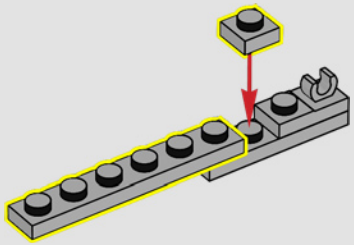

3

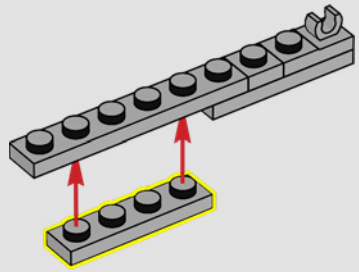

4

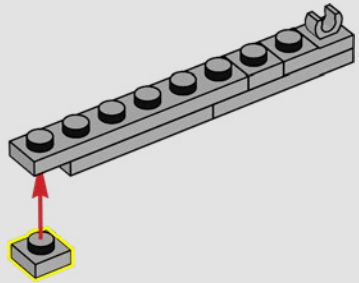

5

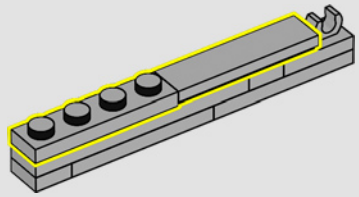

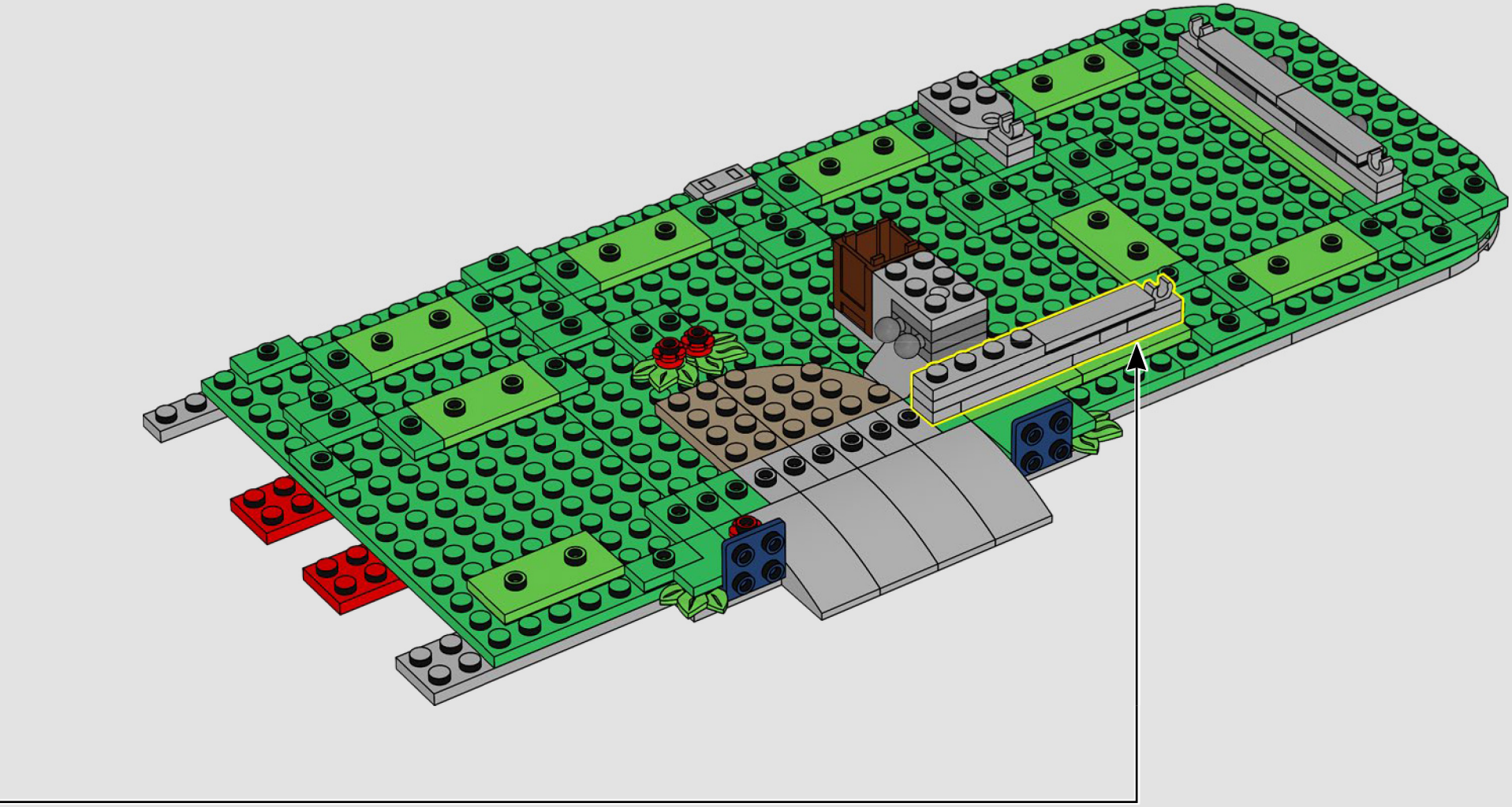

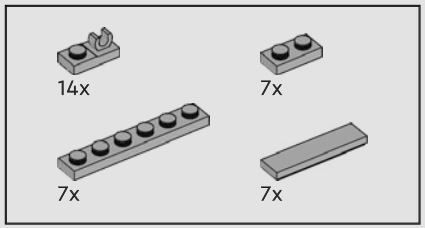

21

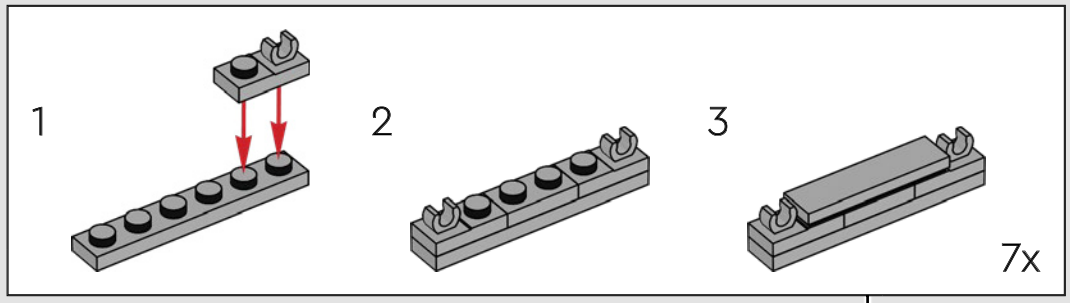

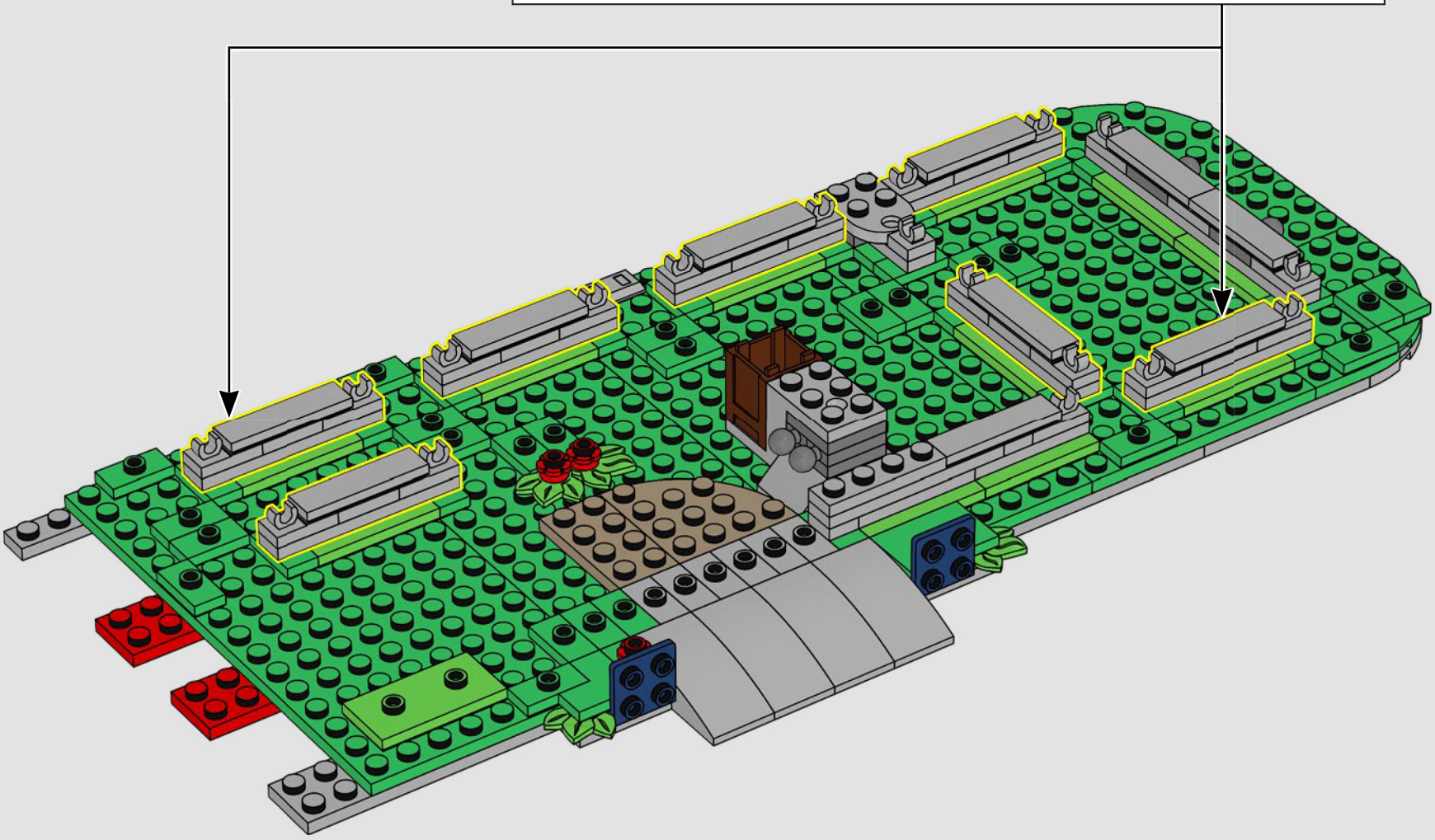

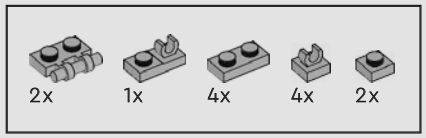

22

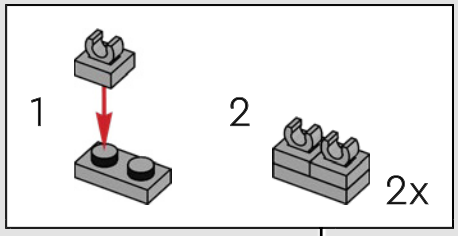

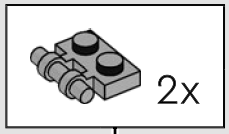

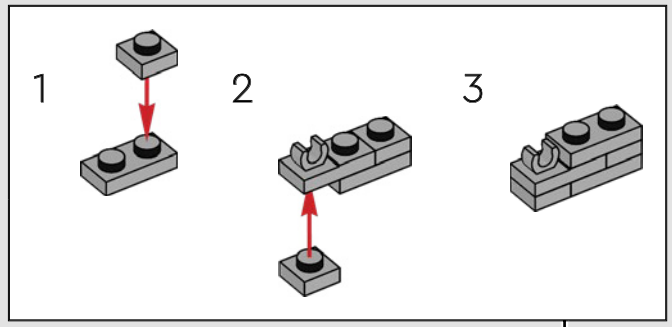

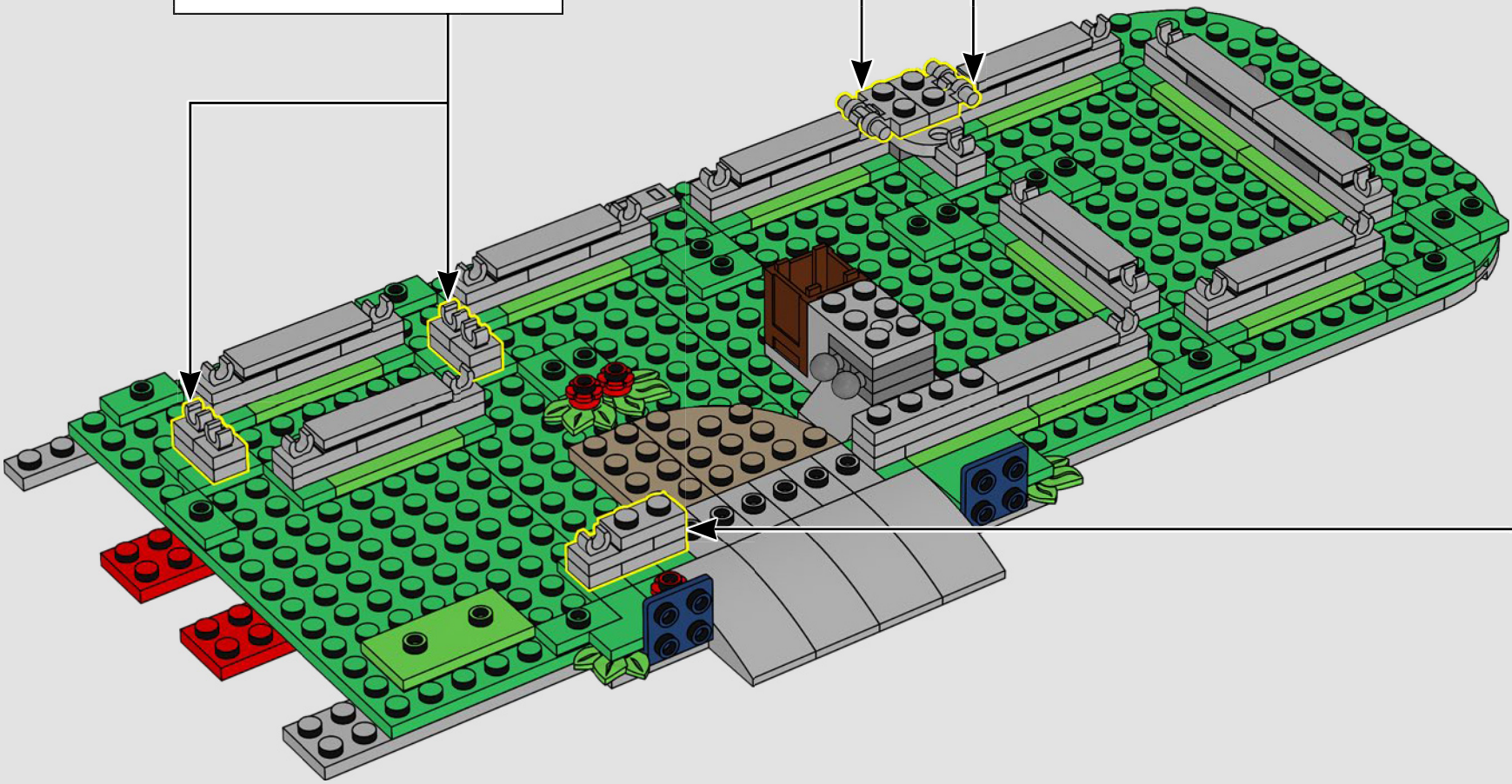

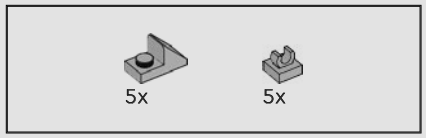

23

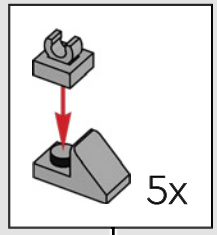

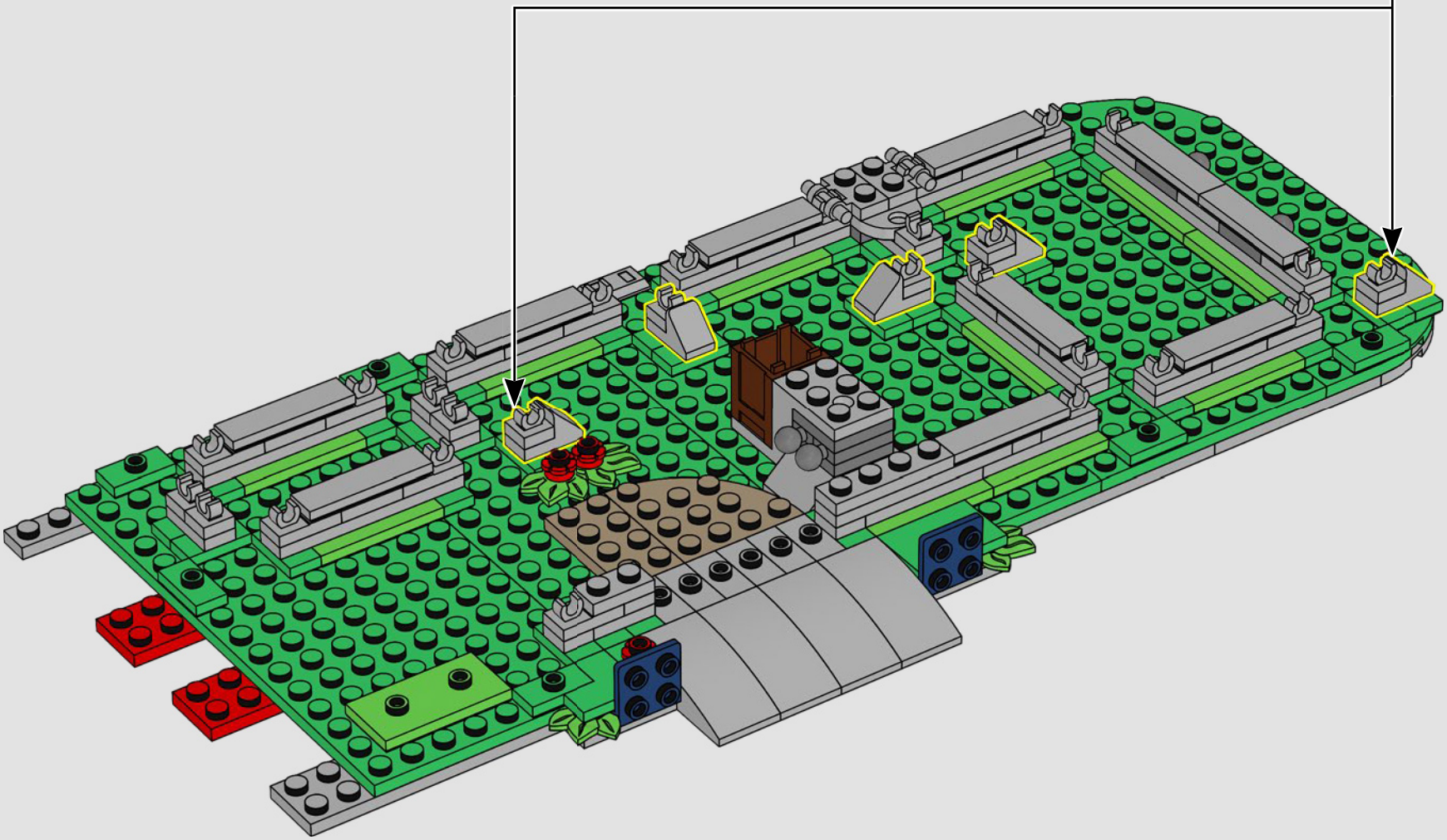

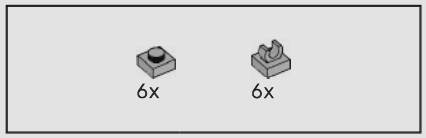

24

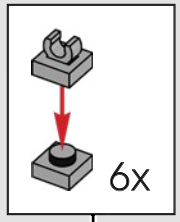

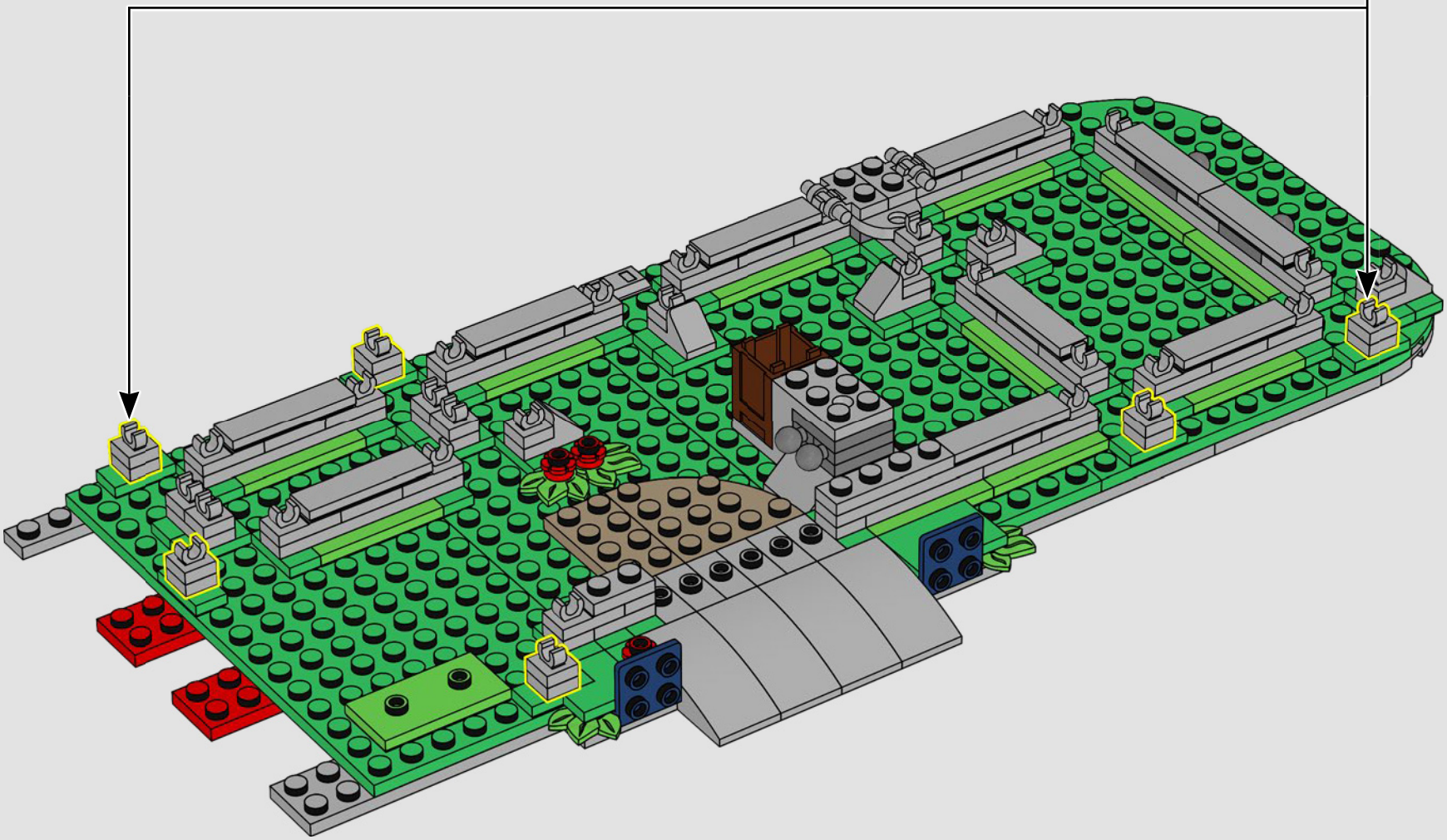

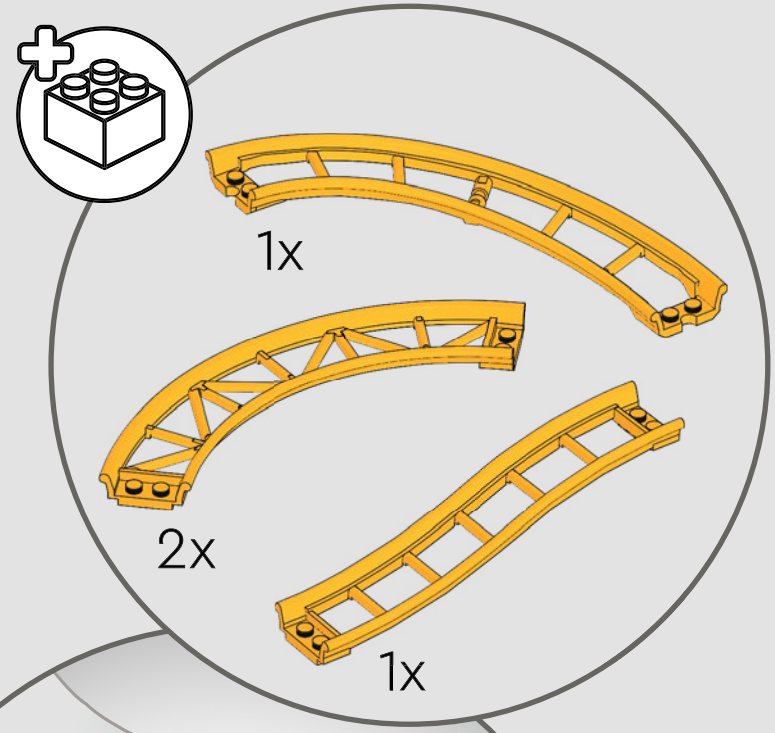

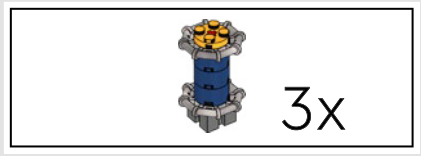

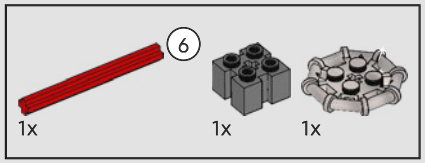

25

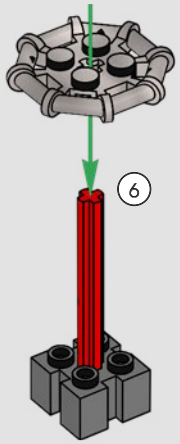

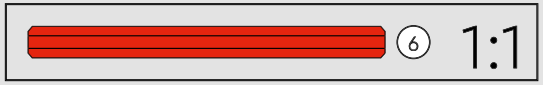

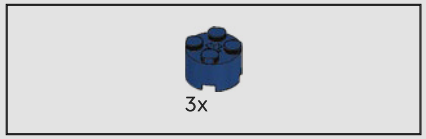

26

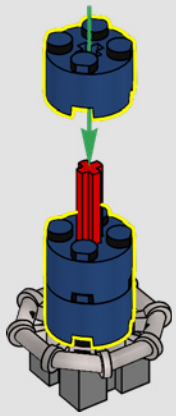

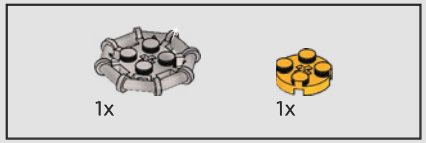

27

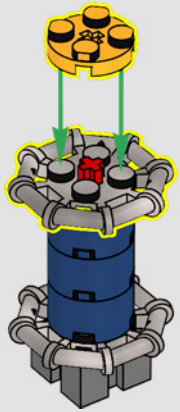

3x

28

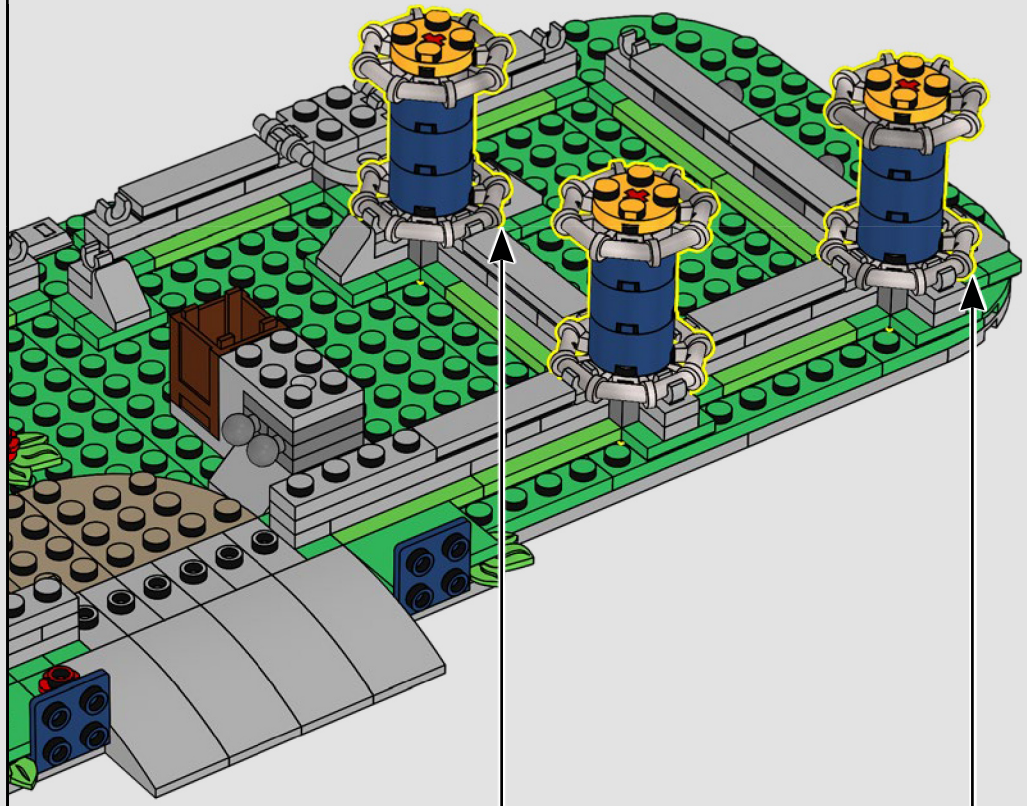

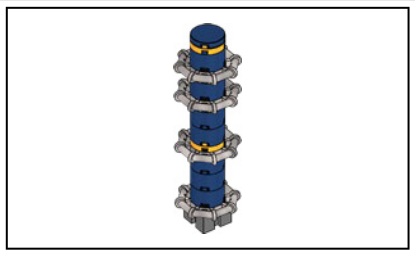

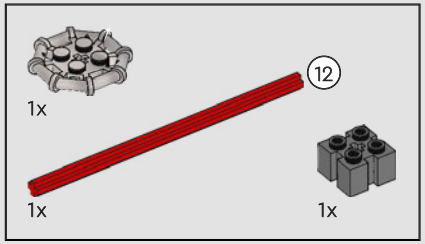

29

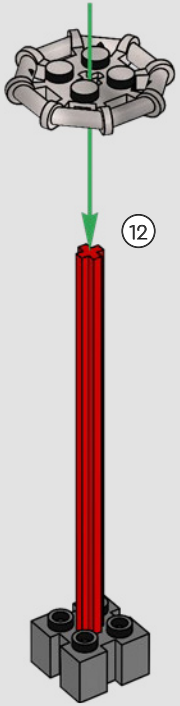

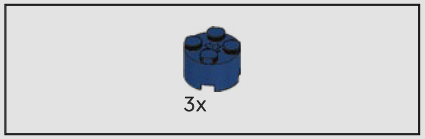

30

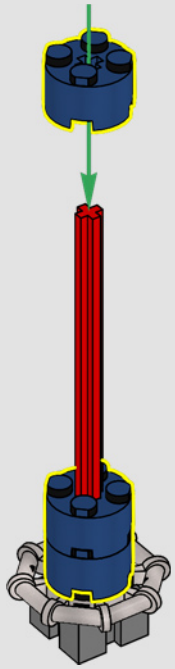

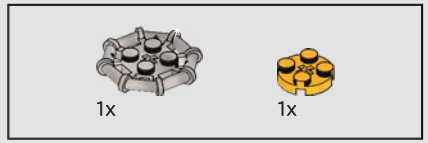

31

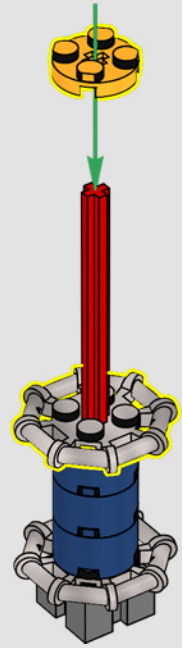

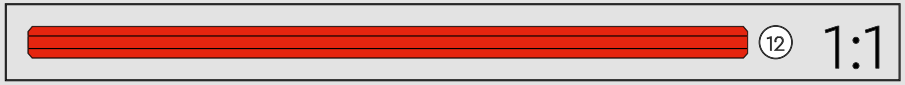

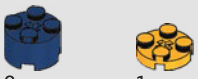

32

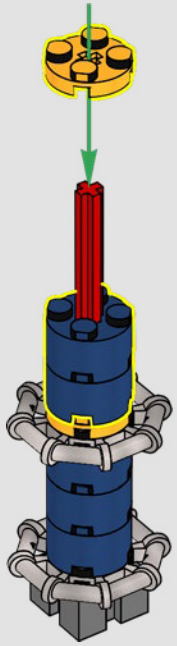

33

34

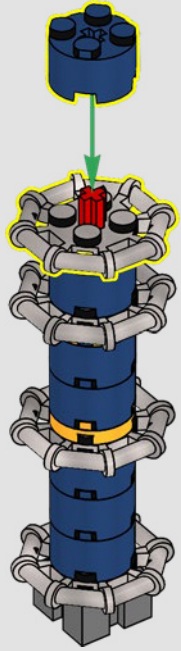

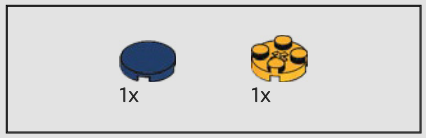

35

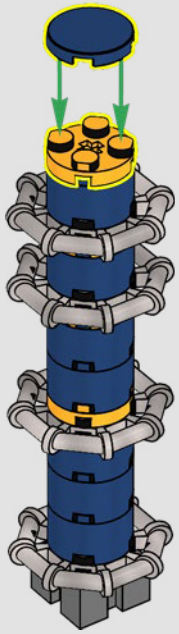

36

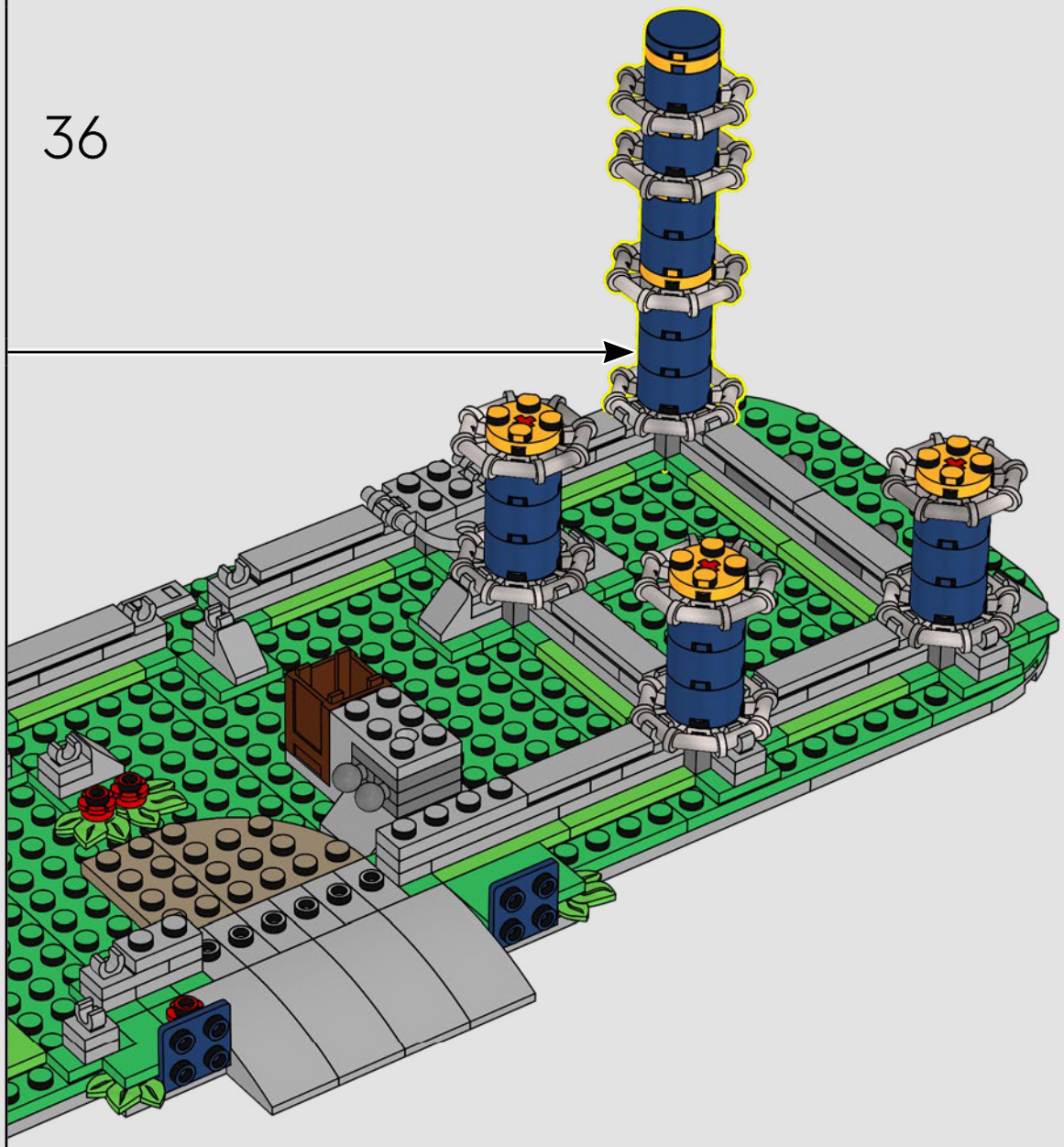

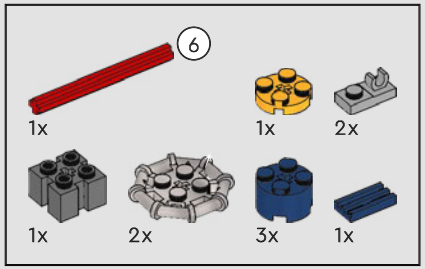

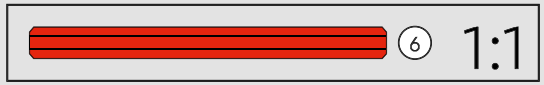

37

1

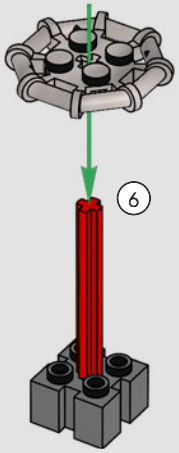

2

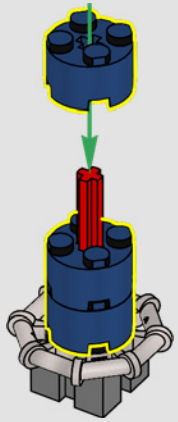

3

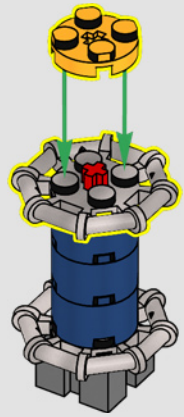

4

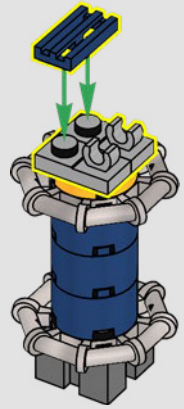

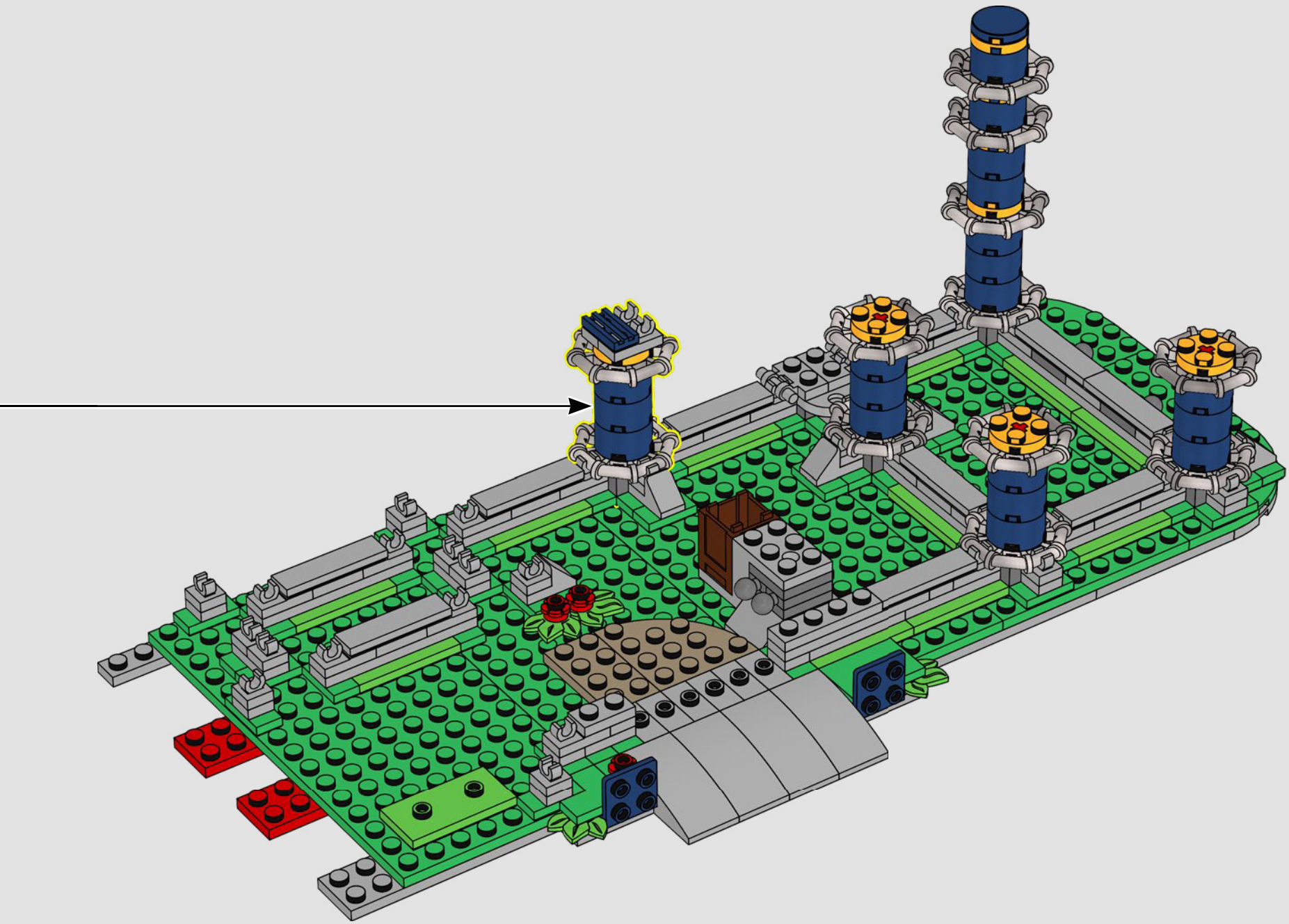

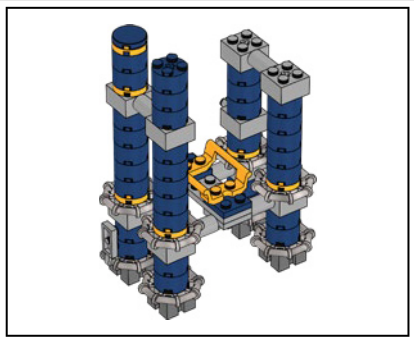

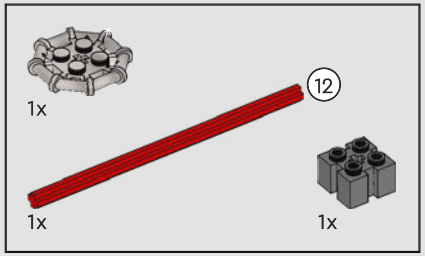

38

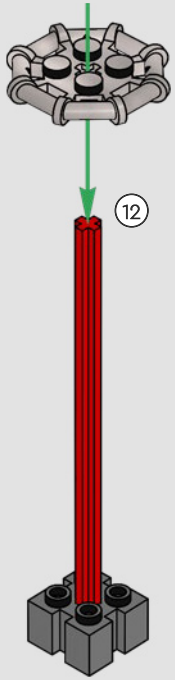

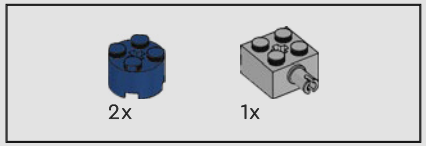

39

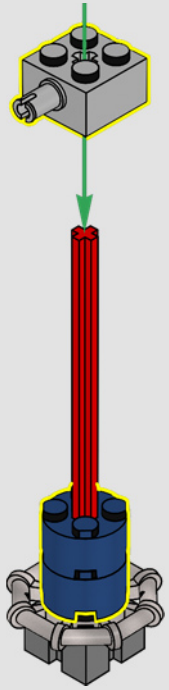

40

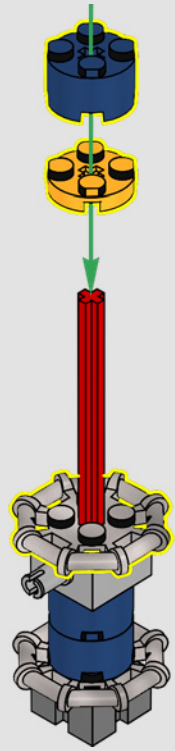

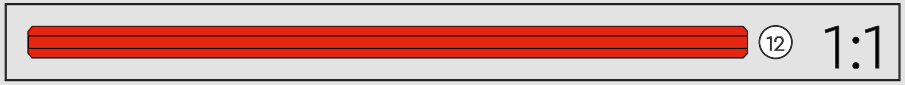

41

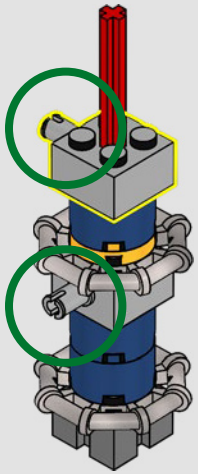

42

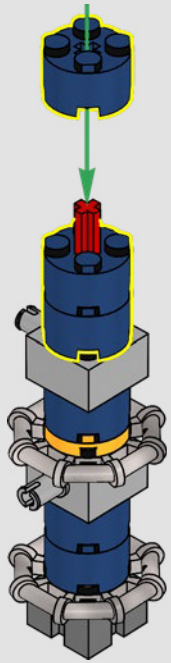

43

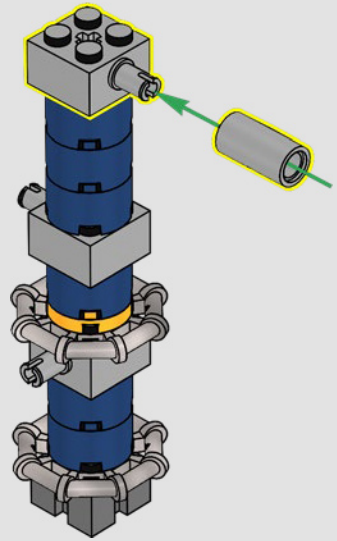

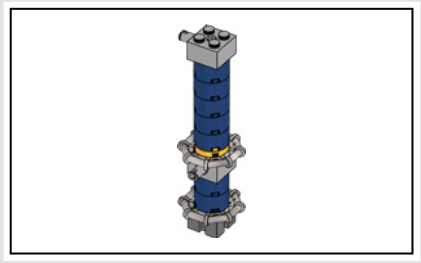

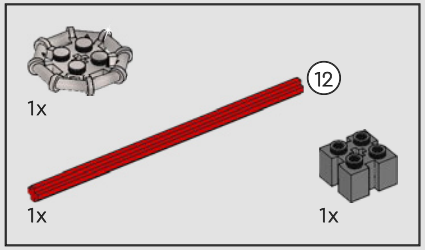

44

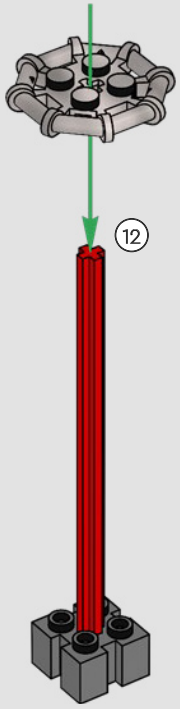

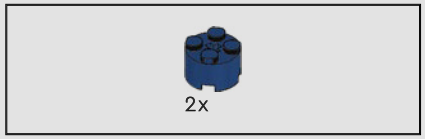

45

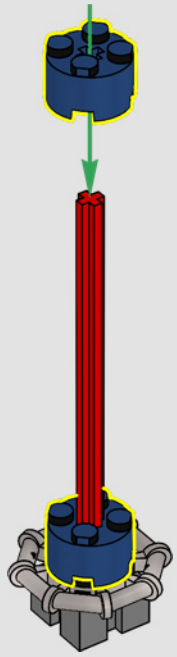

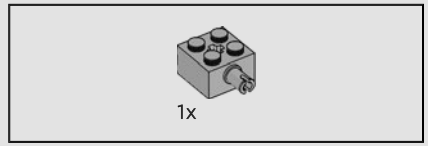

46

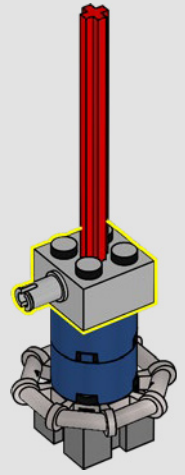

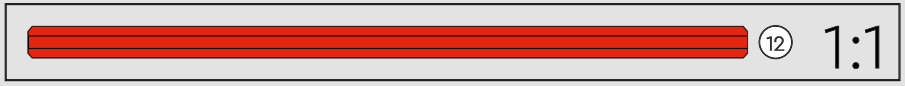

1x

1x

47

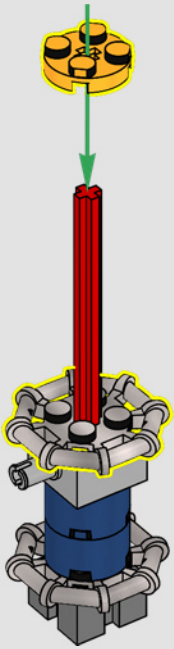

5x

48

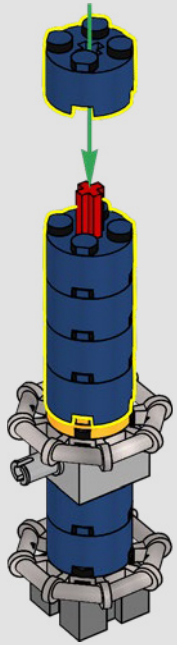

1x

49

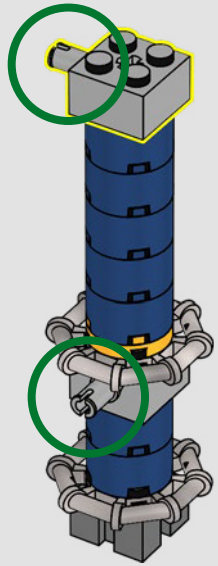

50

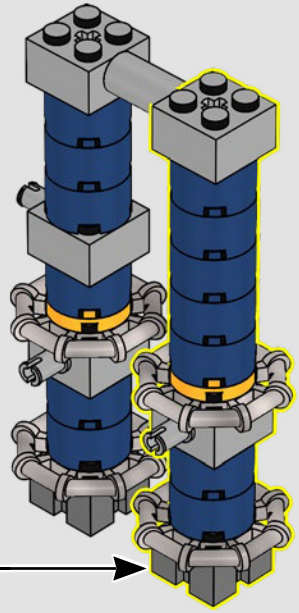

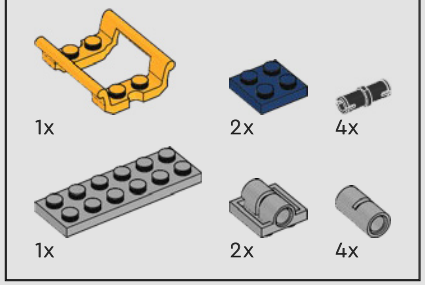

51

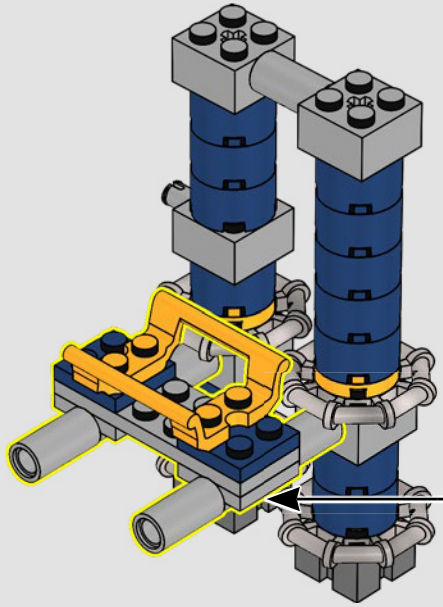

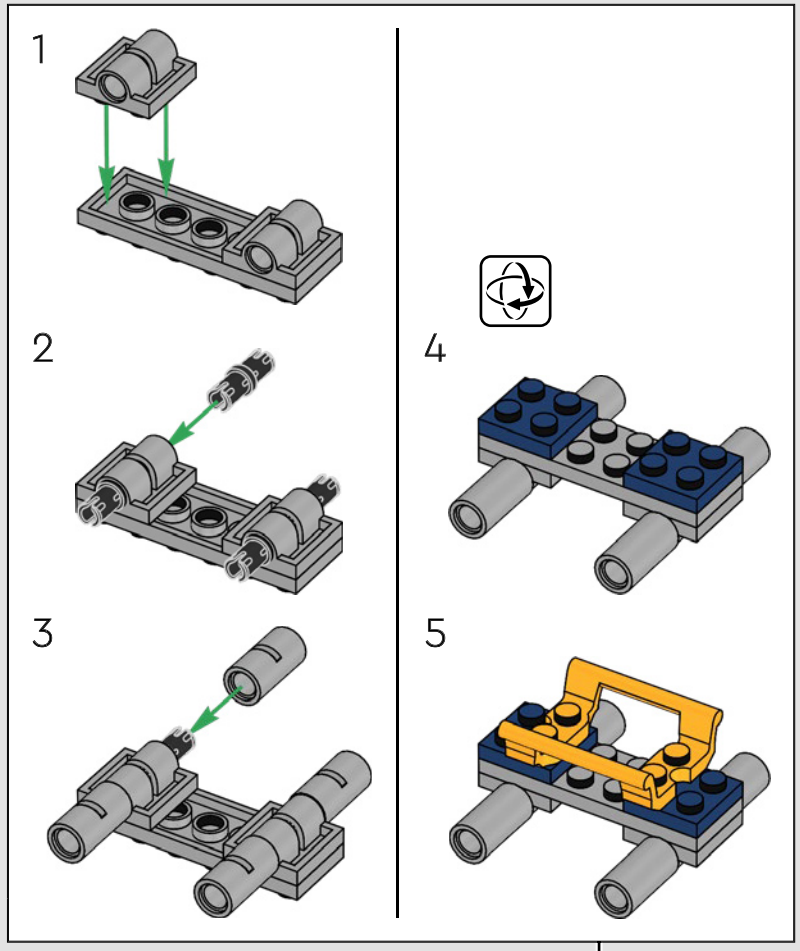

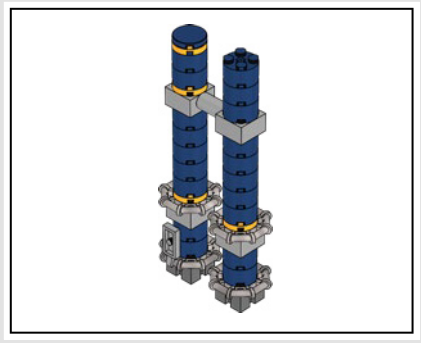

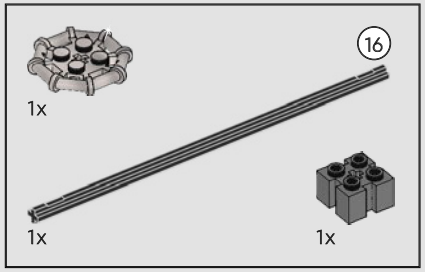

52

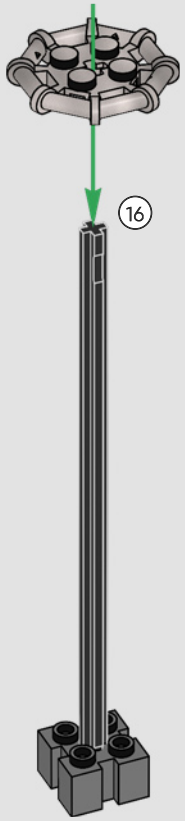

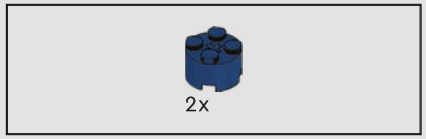

53

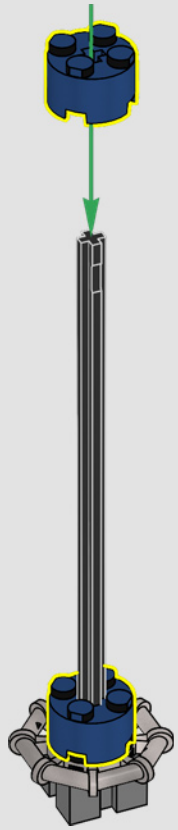

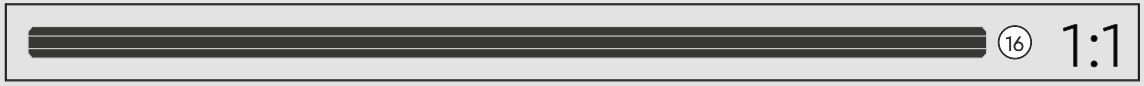

1x

54

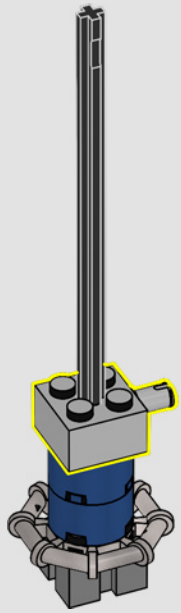

1x

1x

55

5x

56

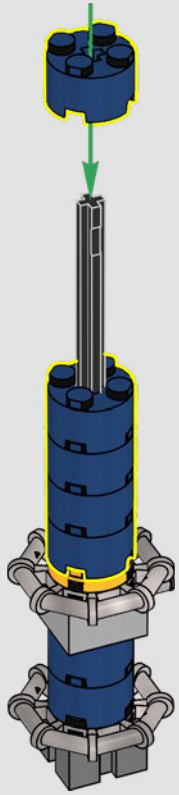

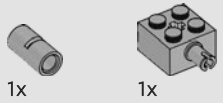

57

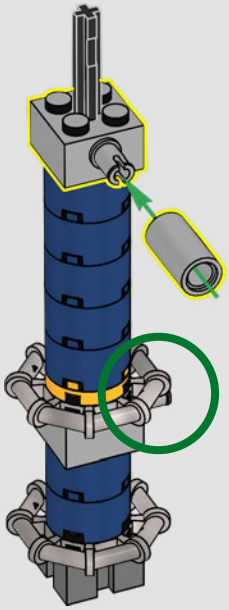

58

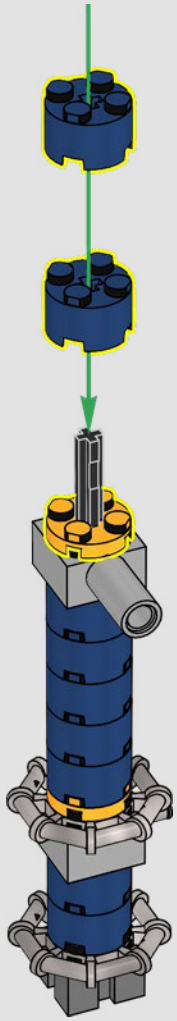

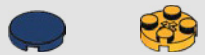

59

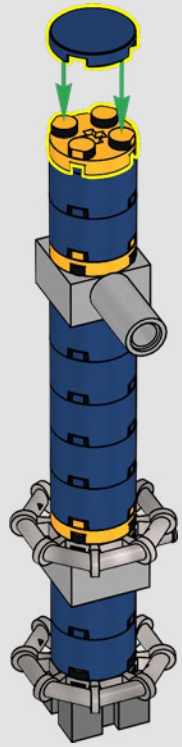

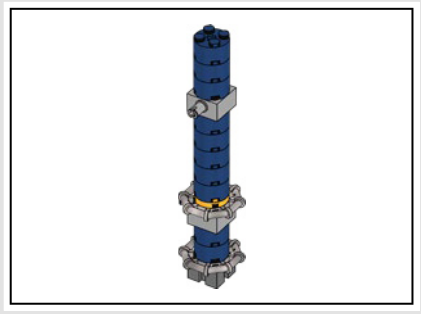

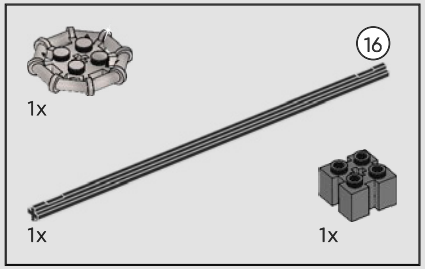

60

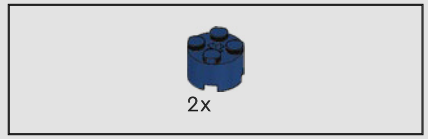

61

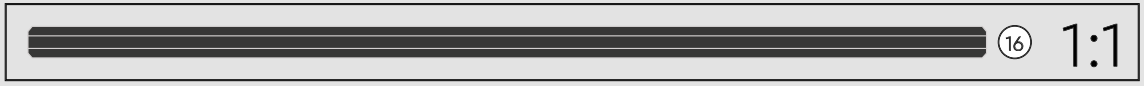

1x

62

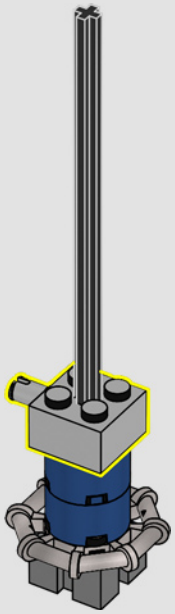

1x

1x

63

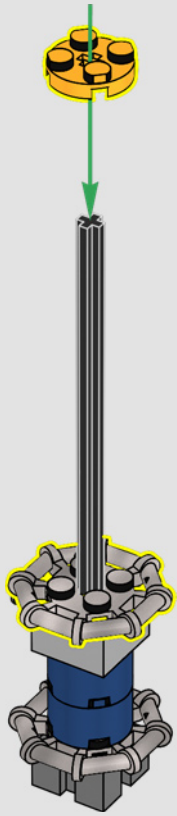

5x

64

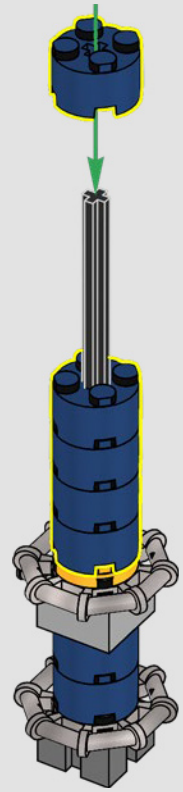

1x

65

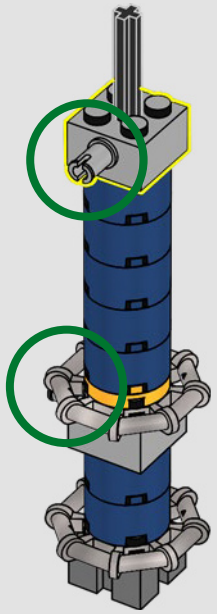

3x

66

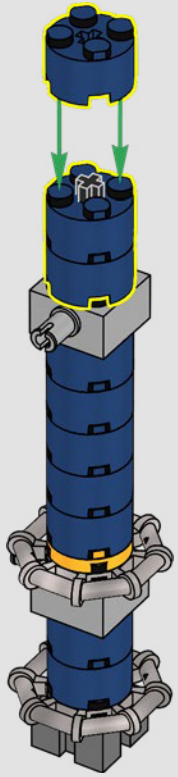

67

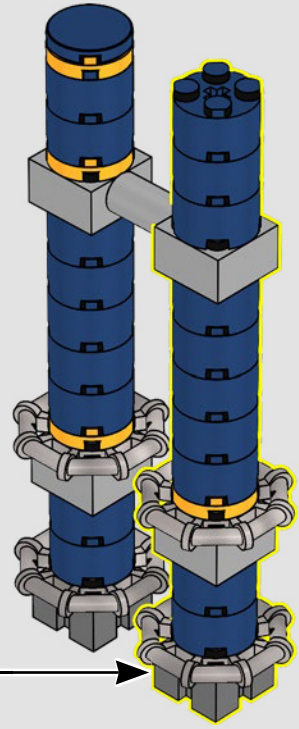

68

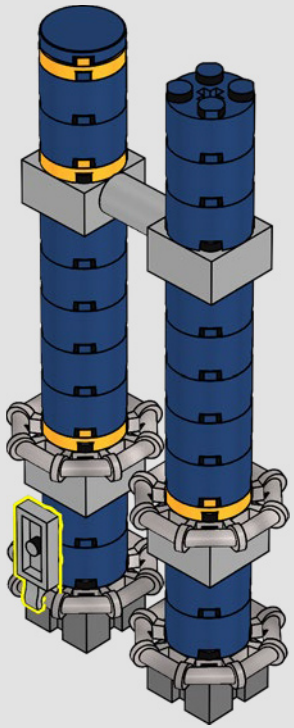

69

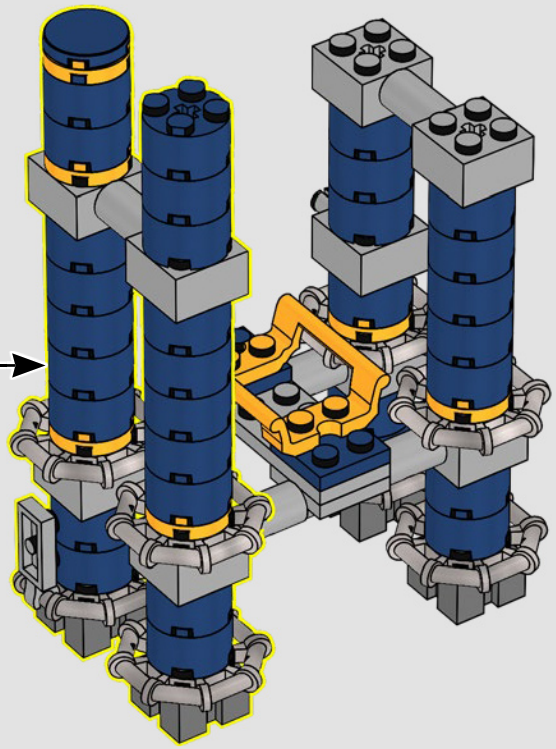

70

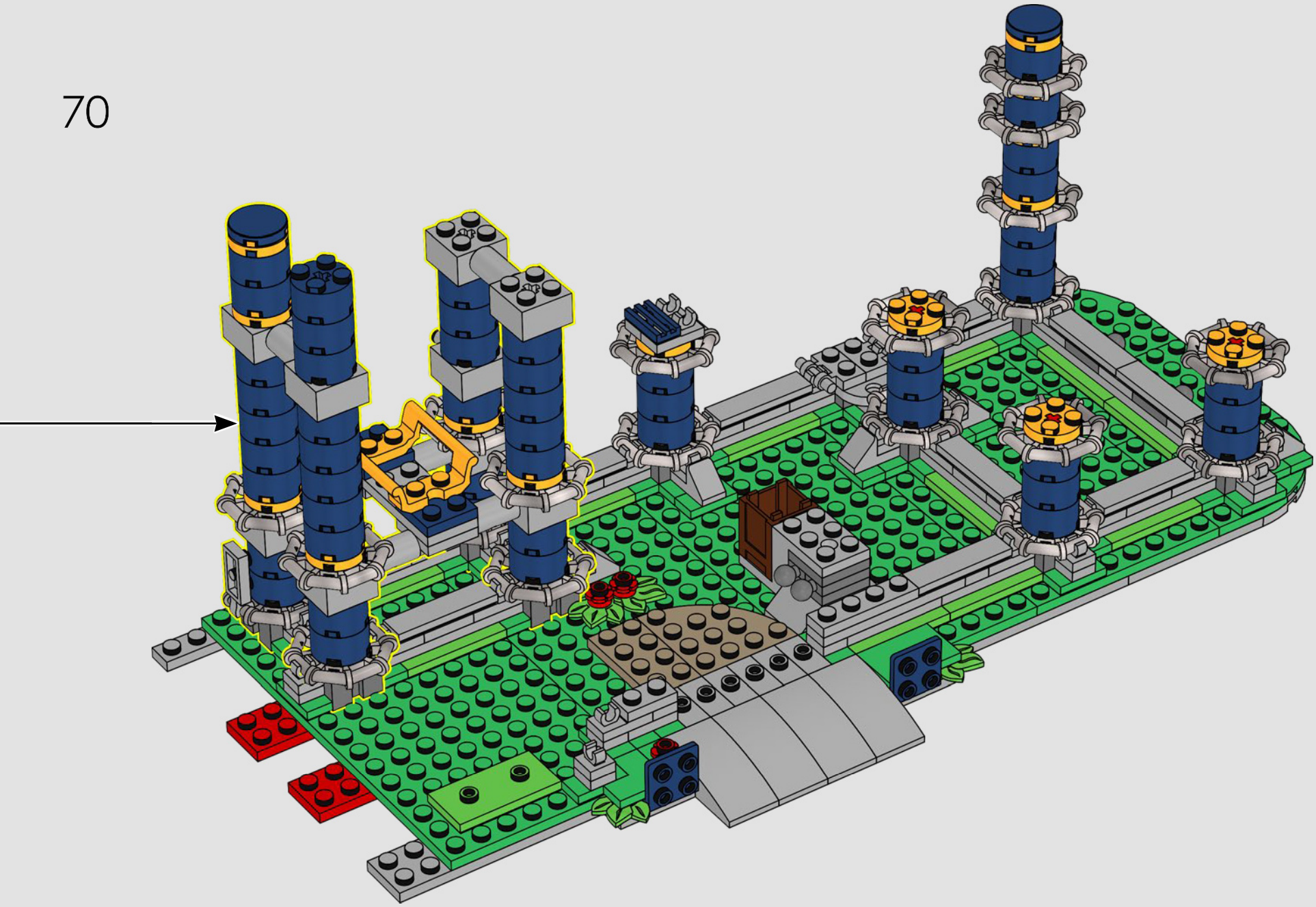

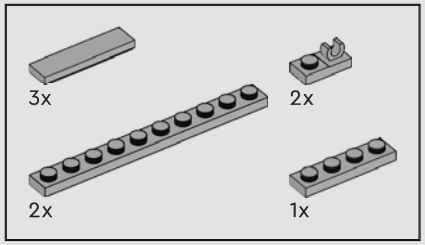

71

1

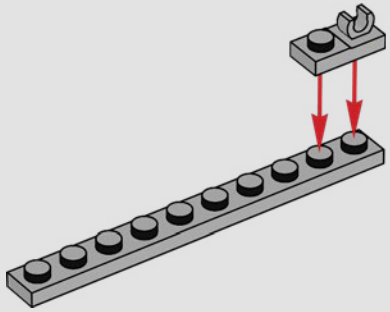

2

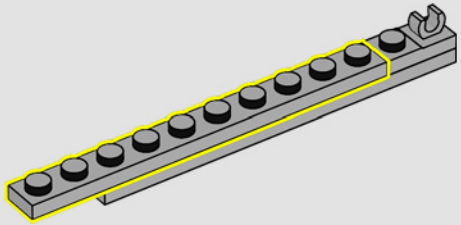

3

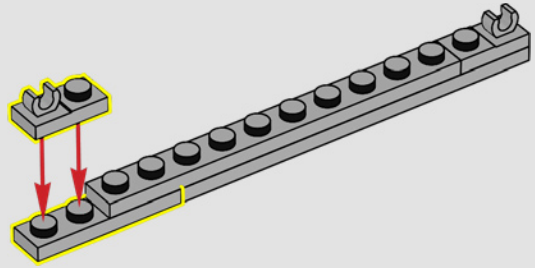

4

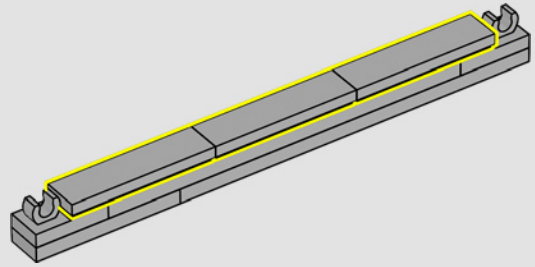

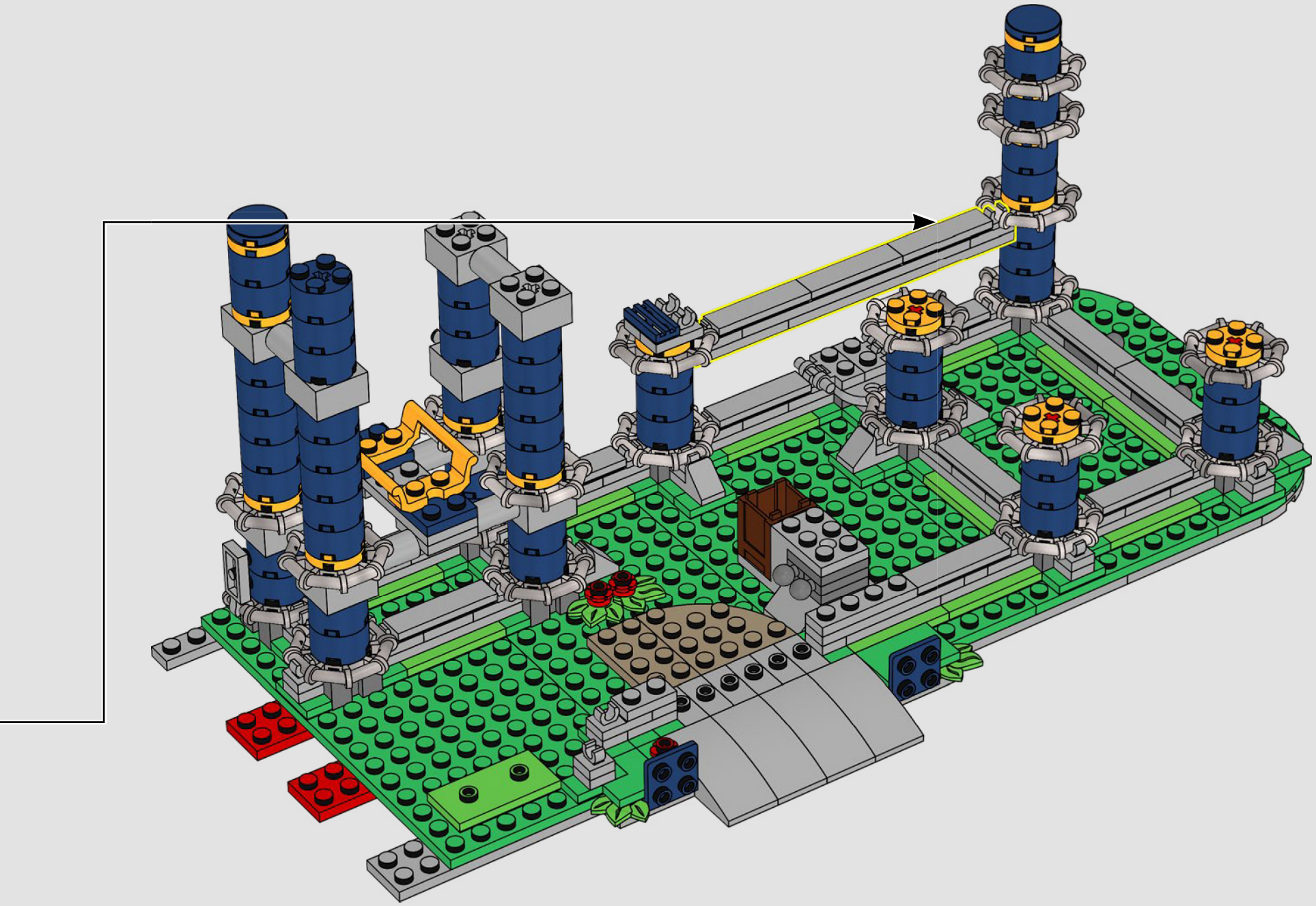

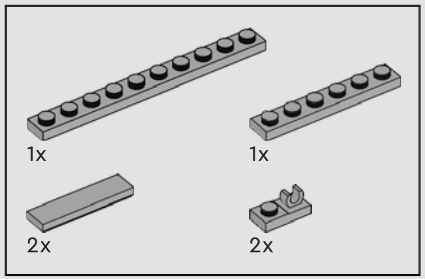

72

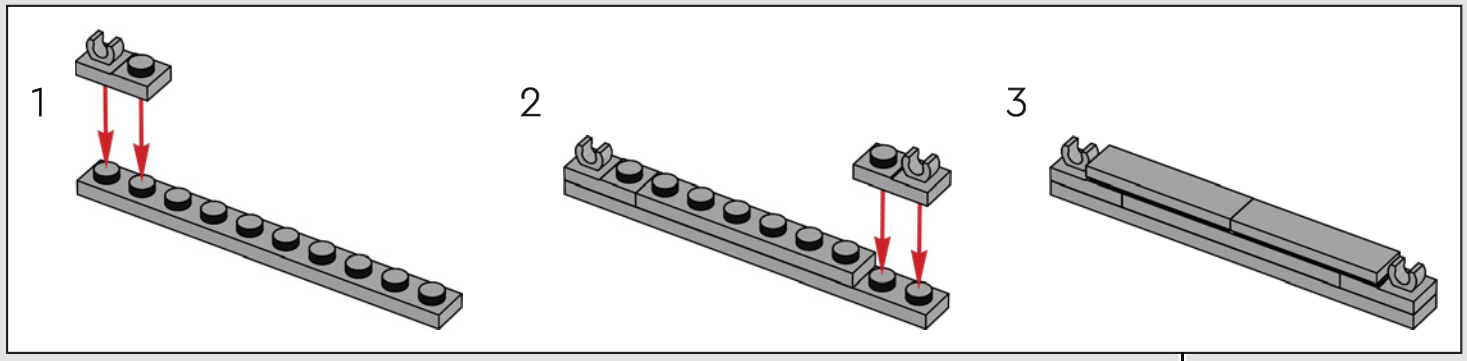

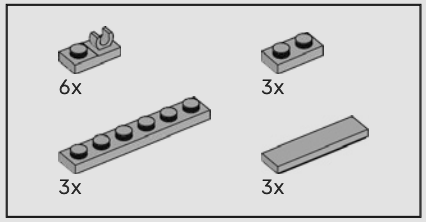

73

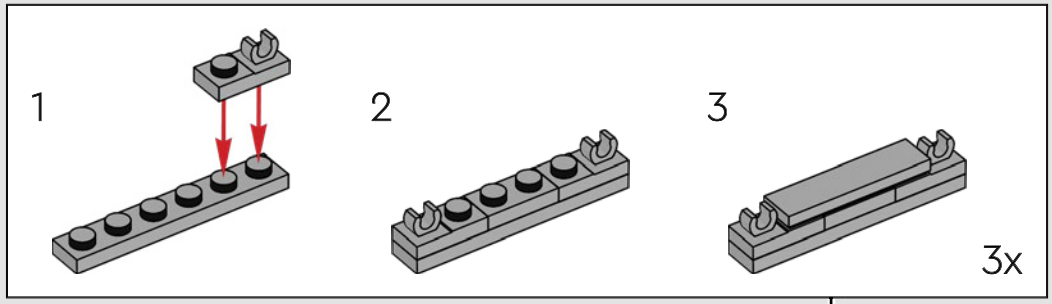

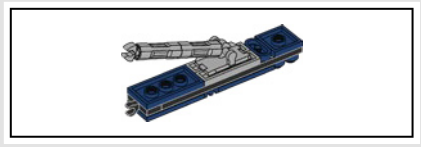

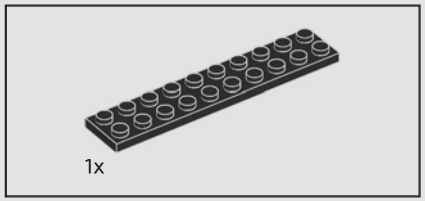

74

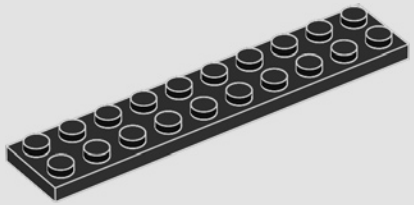

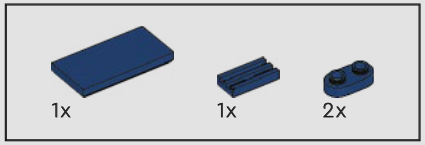

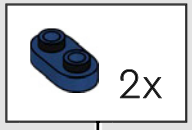

75

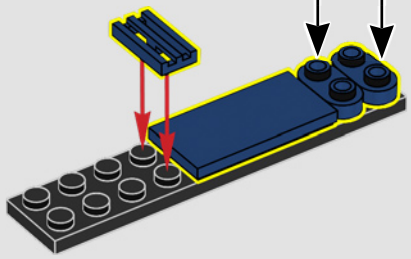

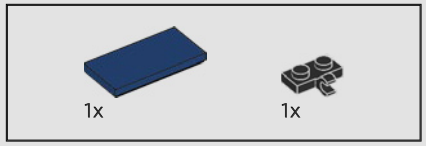

76

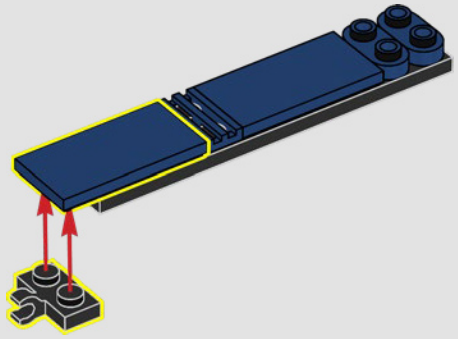

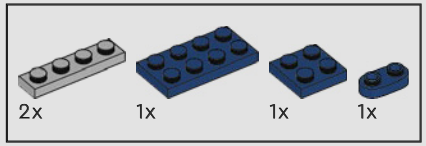

77

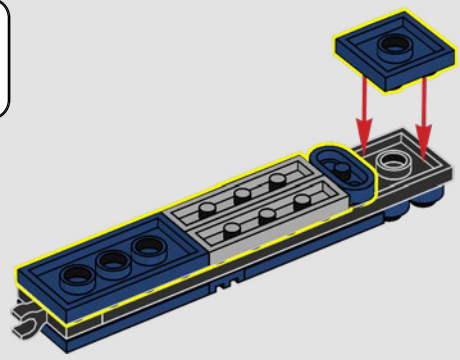

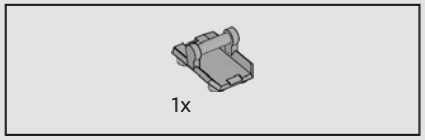

78

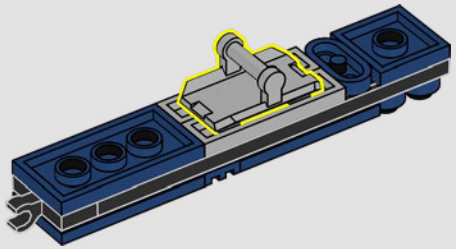

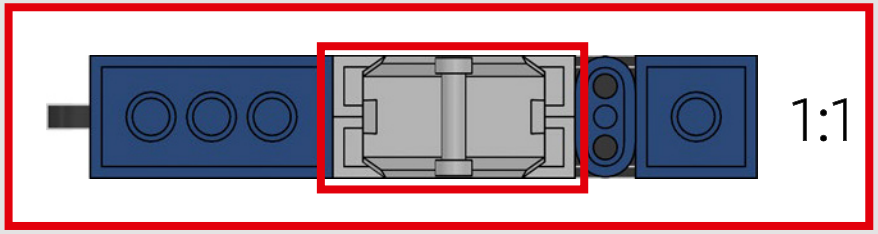

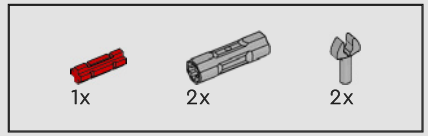

79

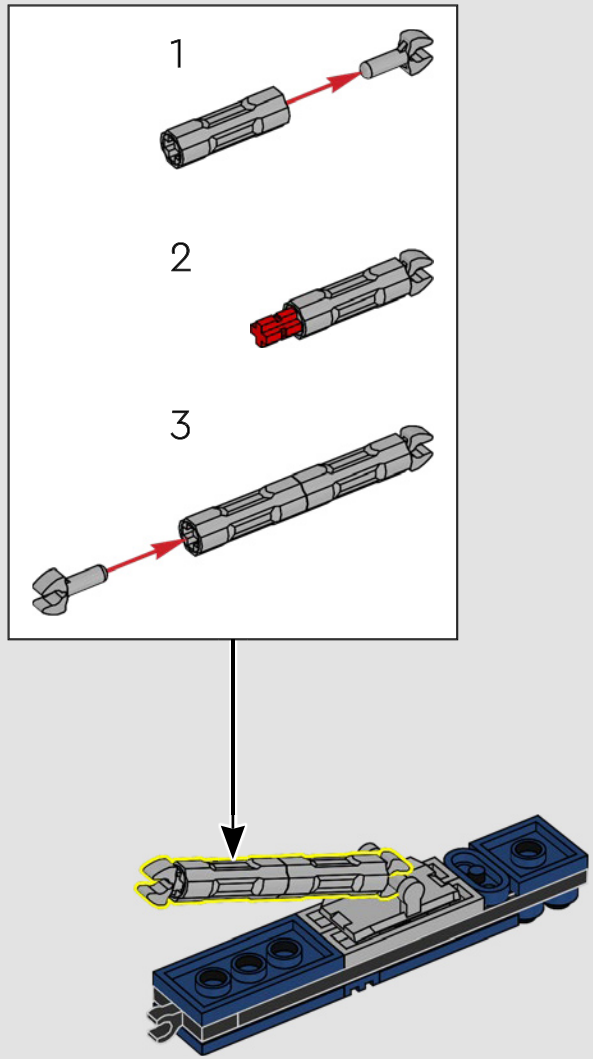

80

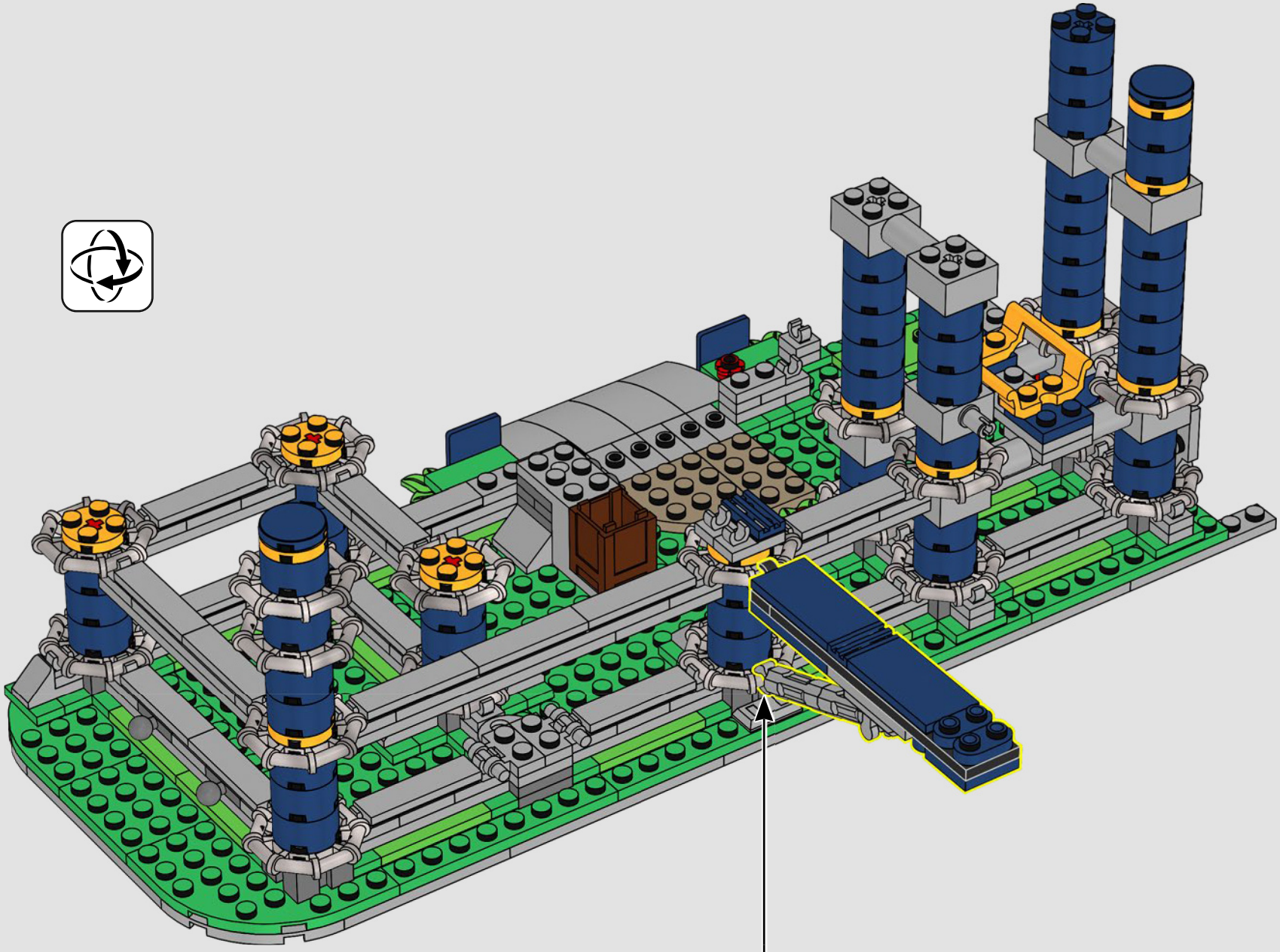

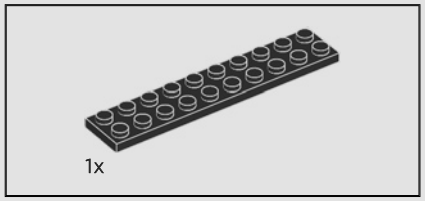

81

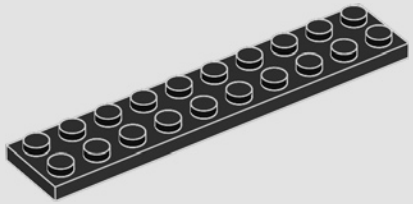

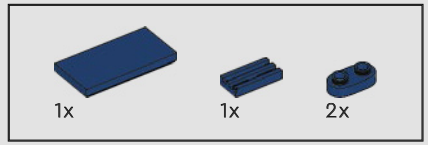

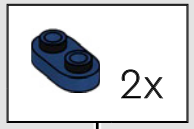

82

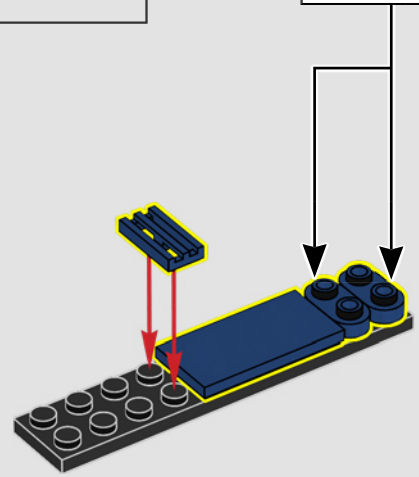

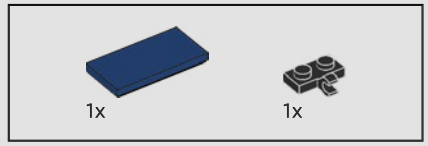

83

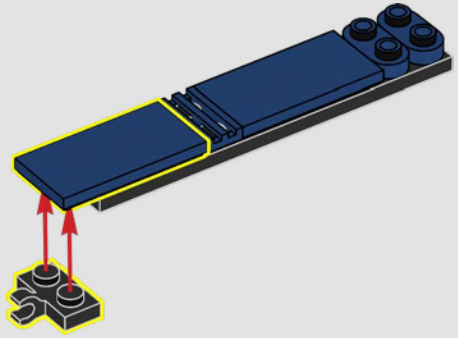

84

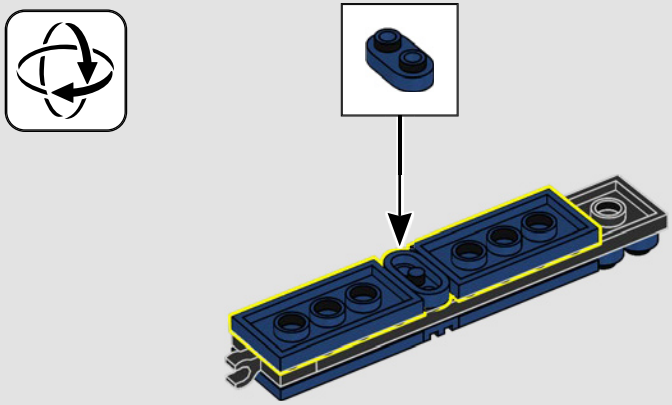

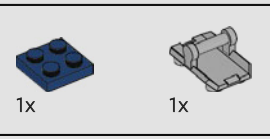

85

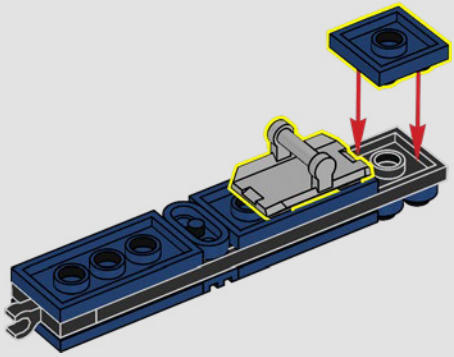

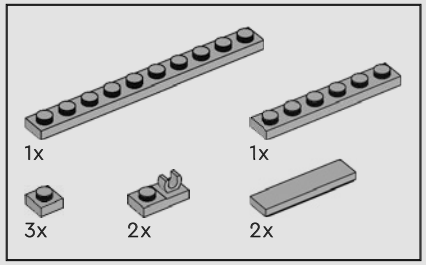

86

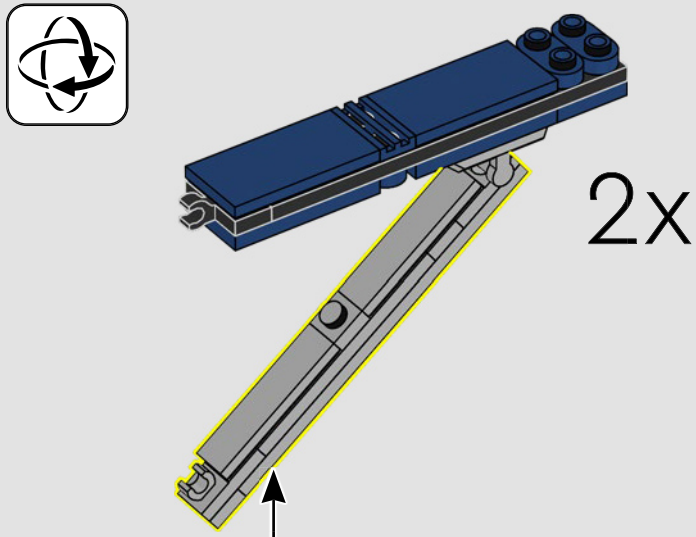

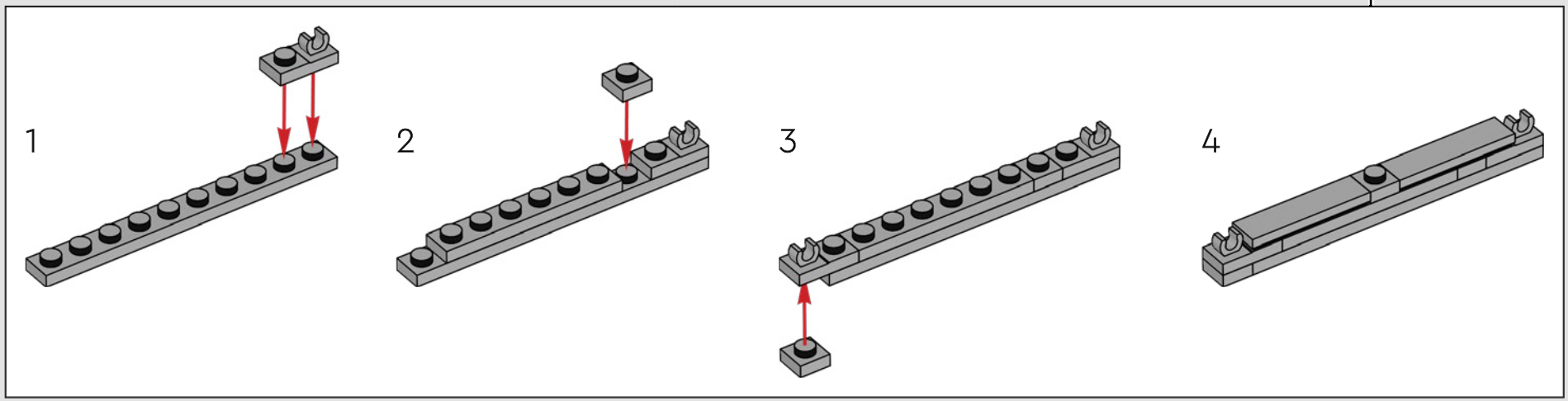

87

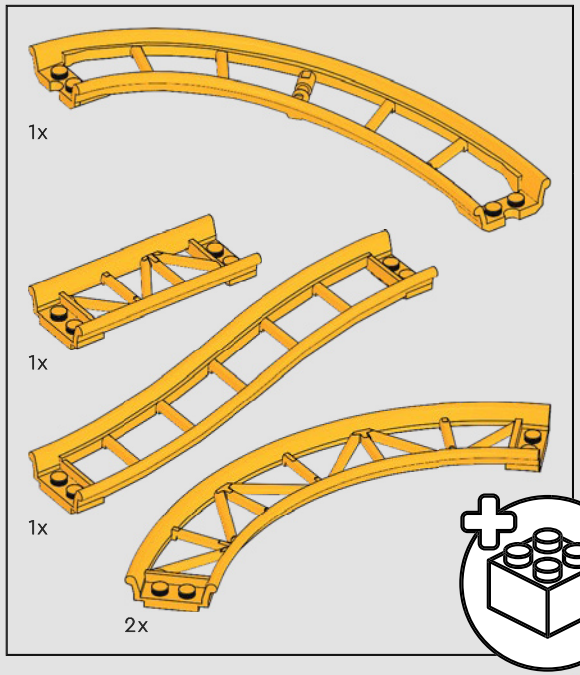

88

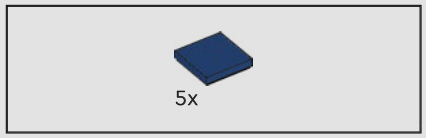

89

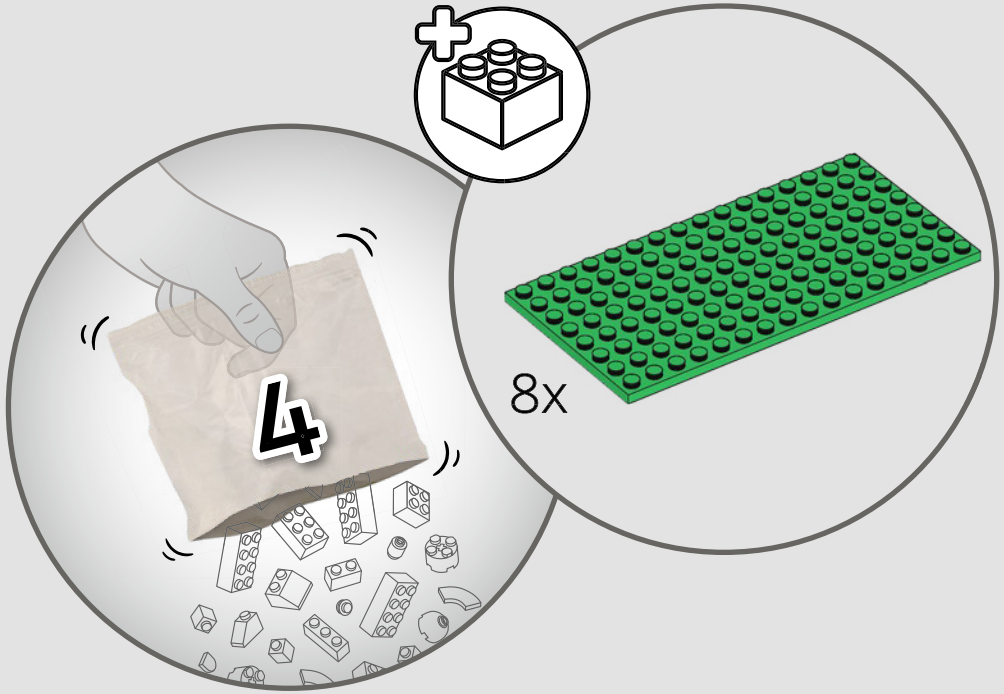

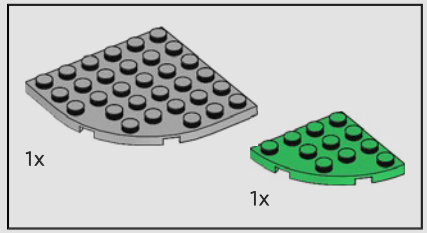

90

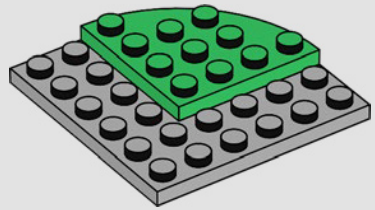

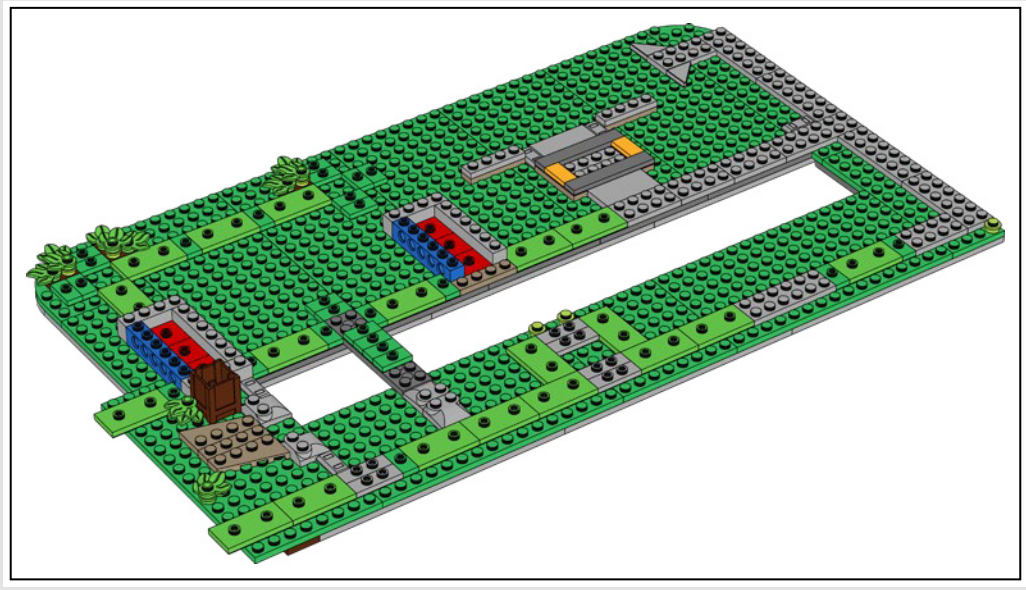

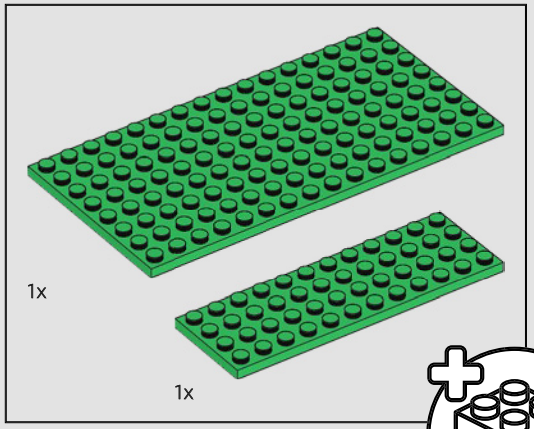

91

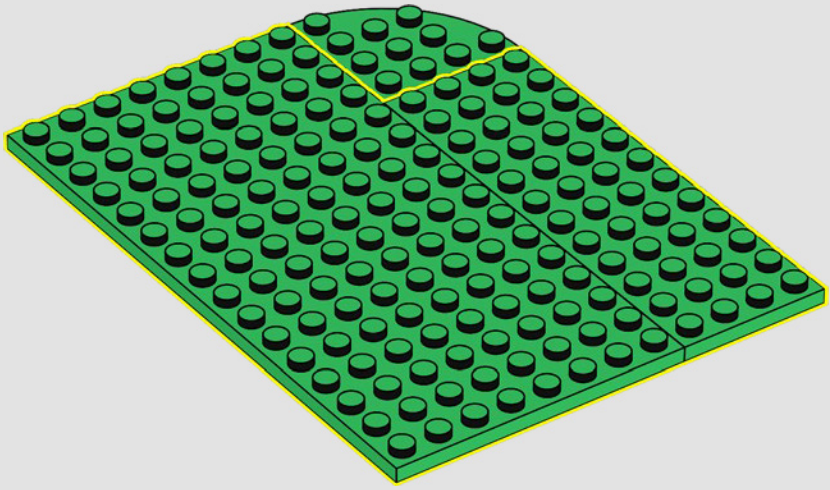

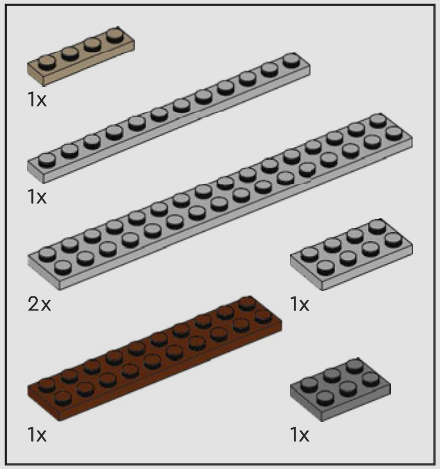

92

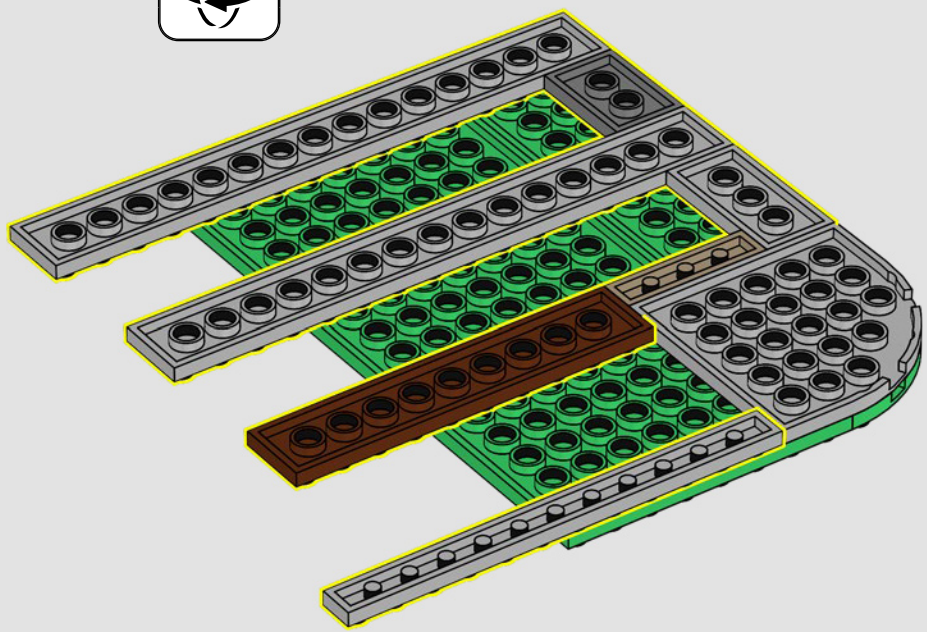

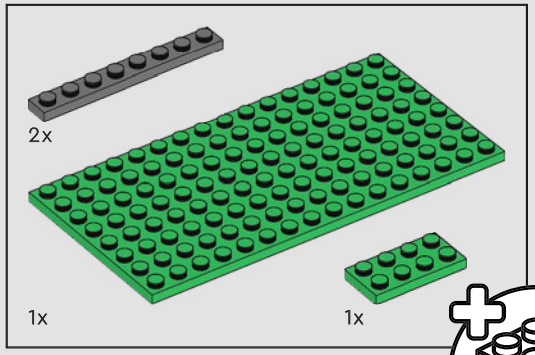

93

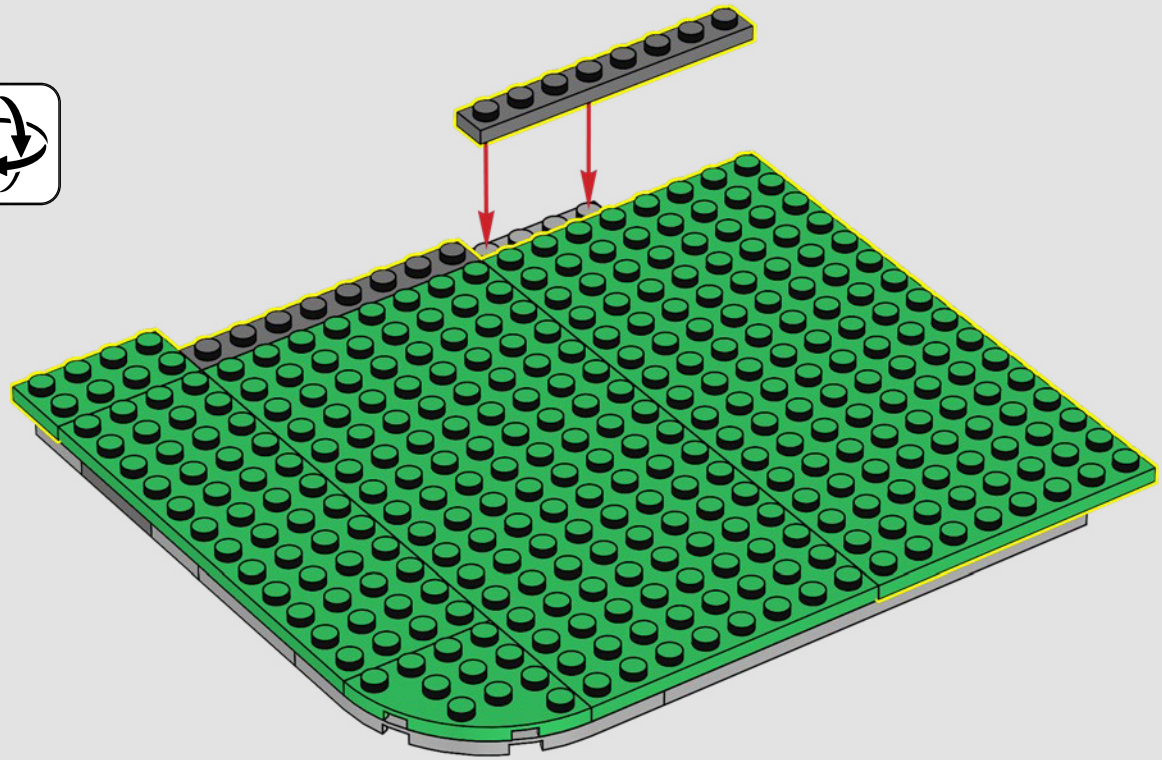

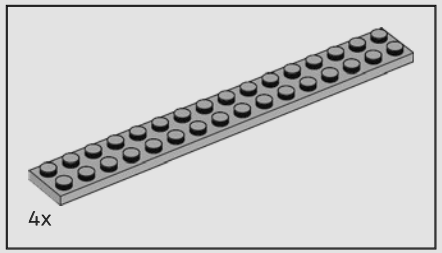

94

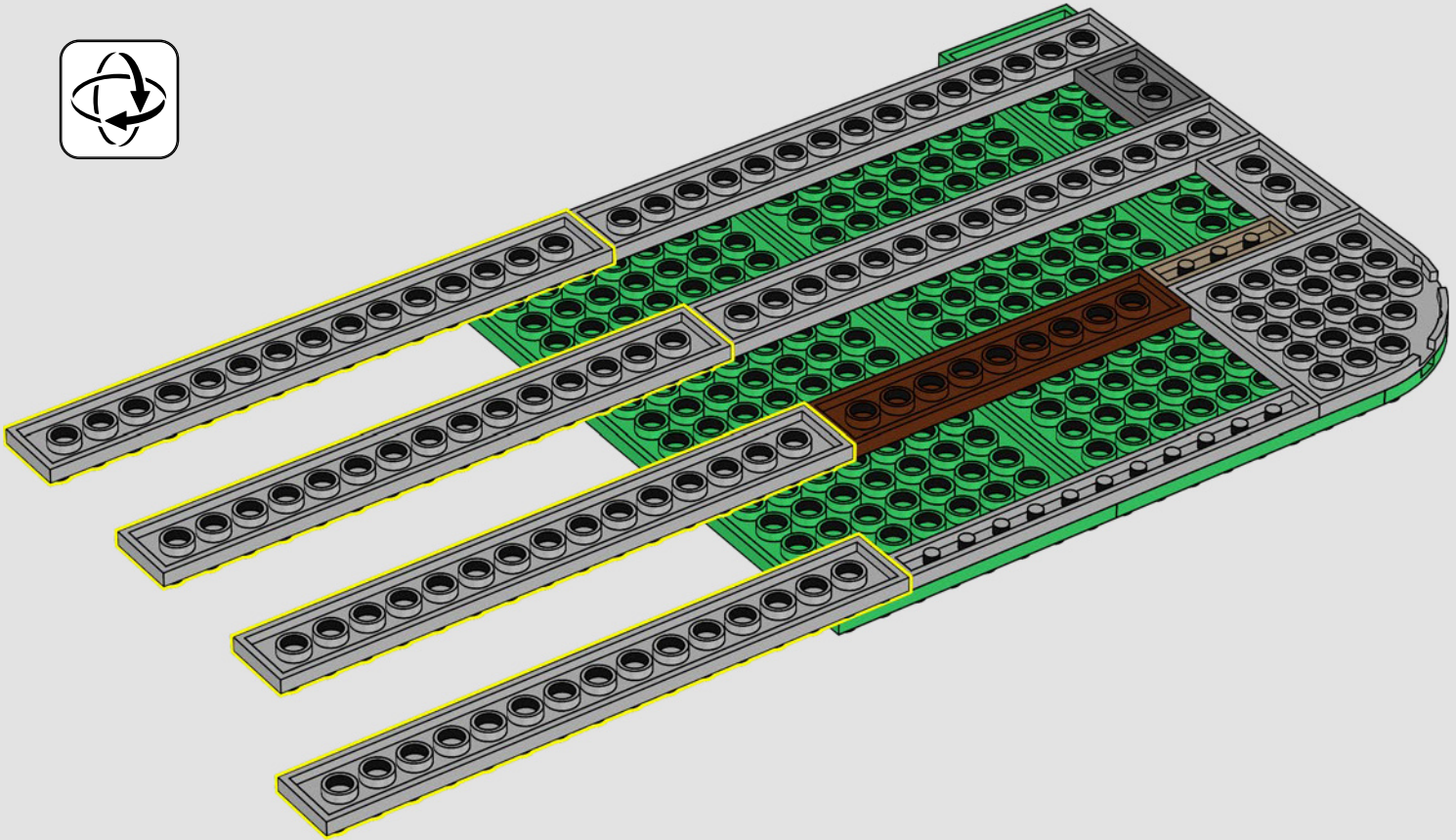

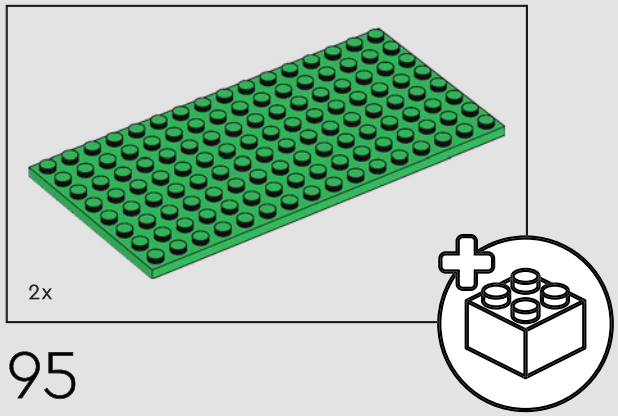

95

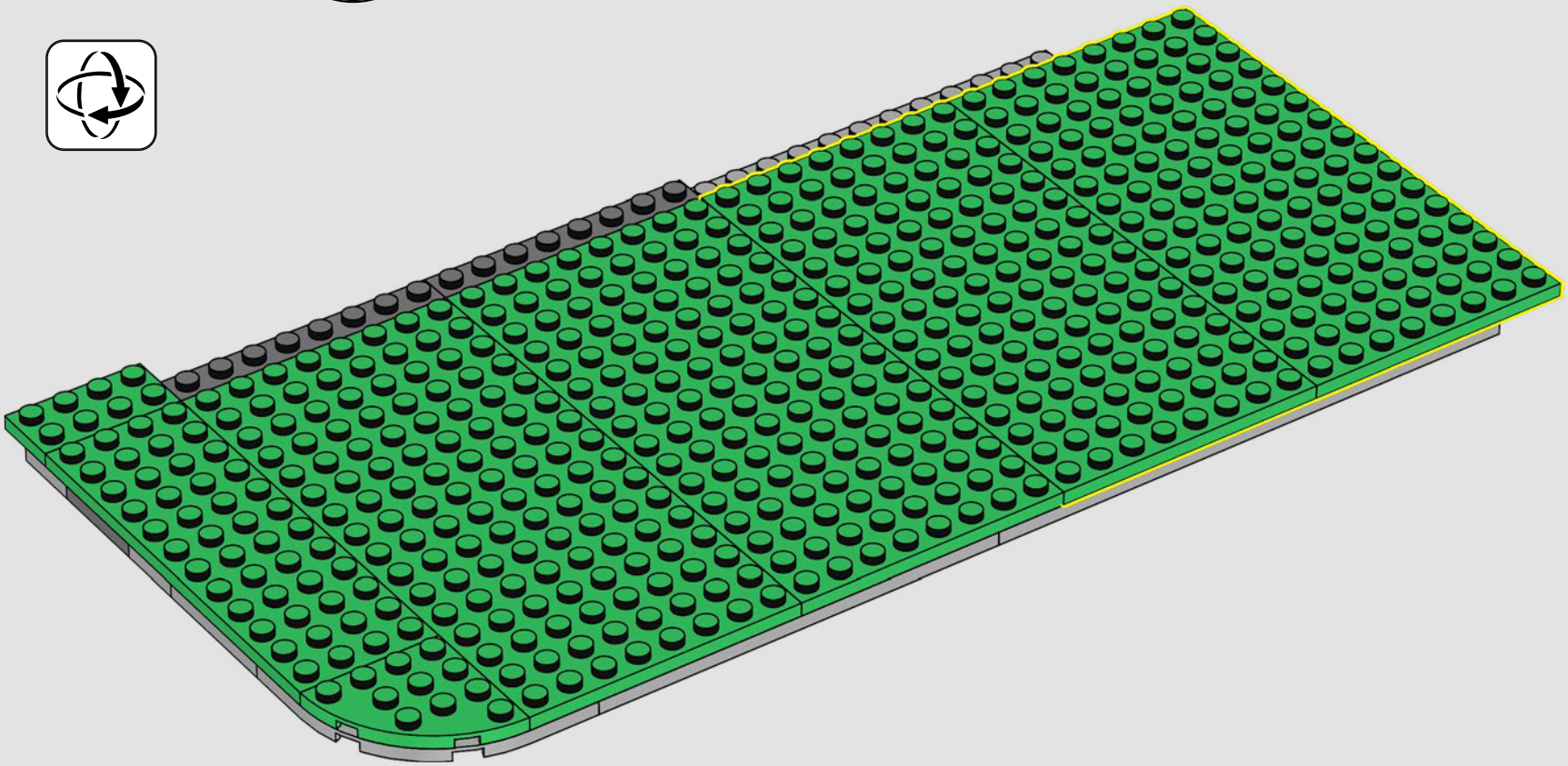

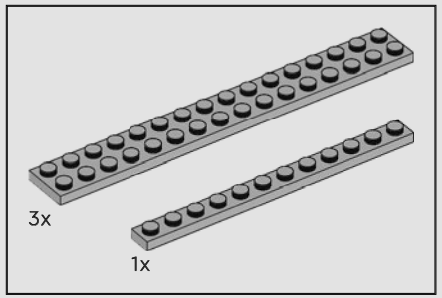

96

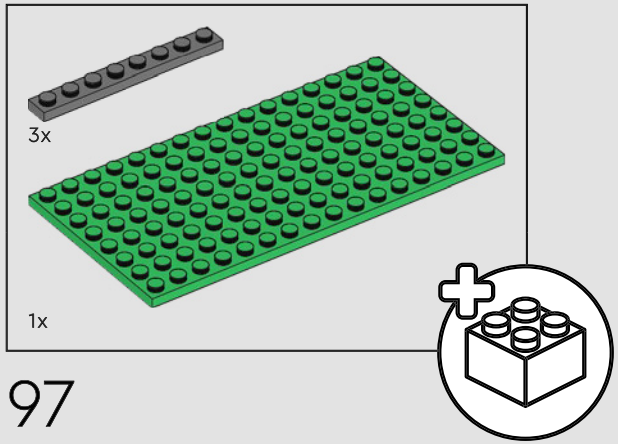

97

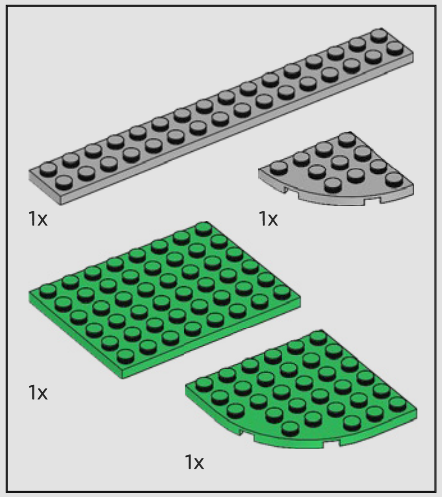

98

1

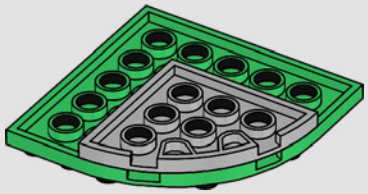

2

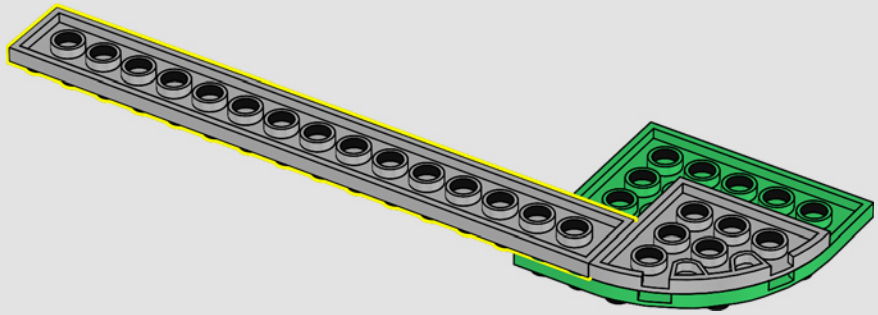

3

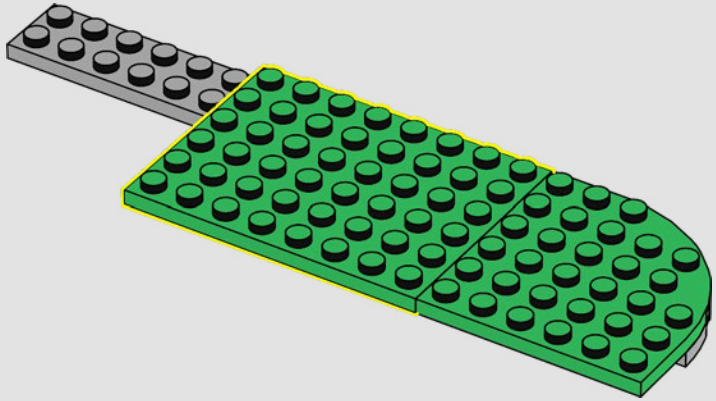

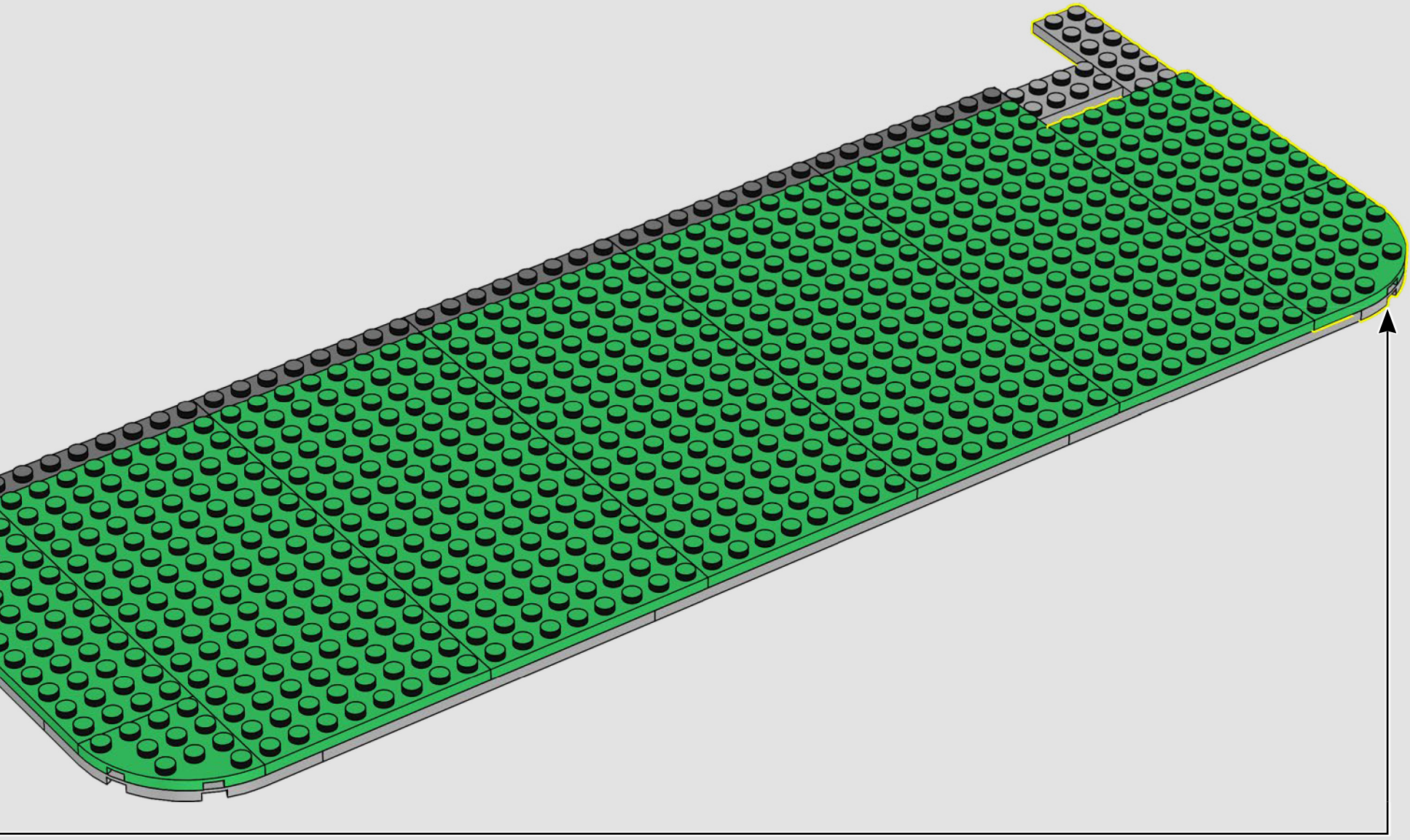

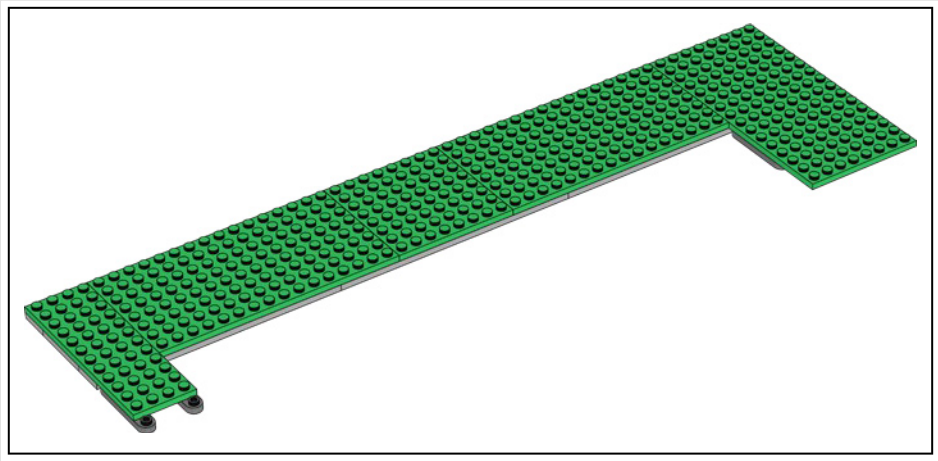

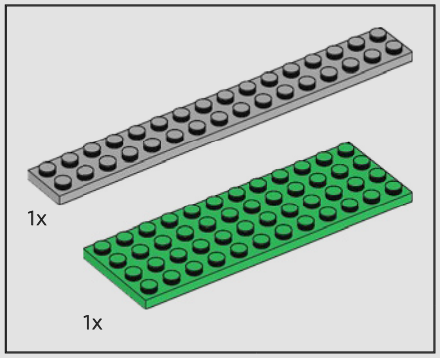

99

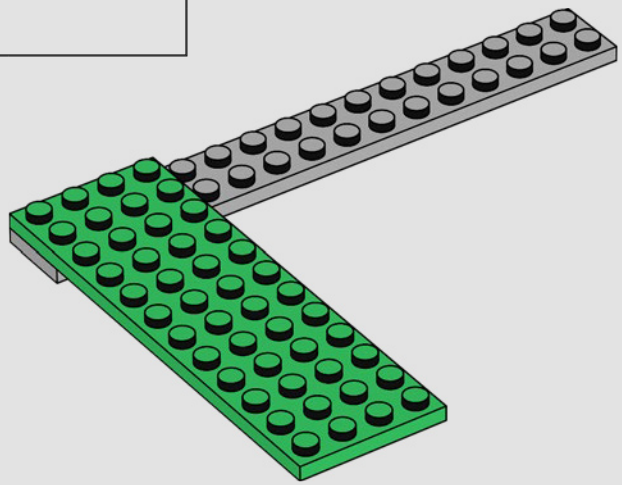

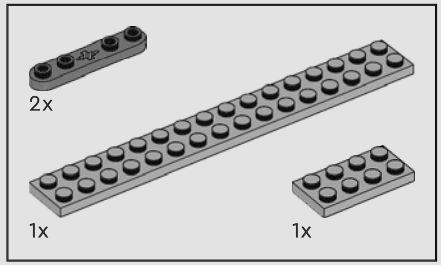

100

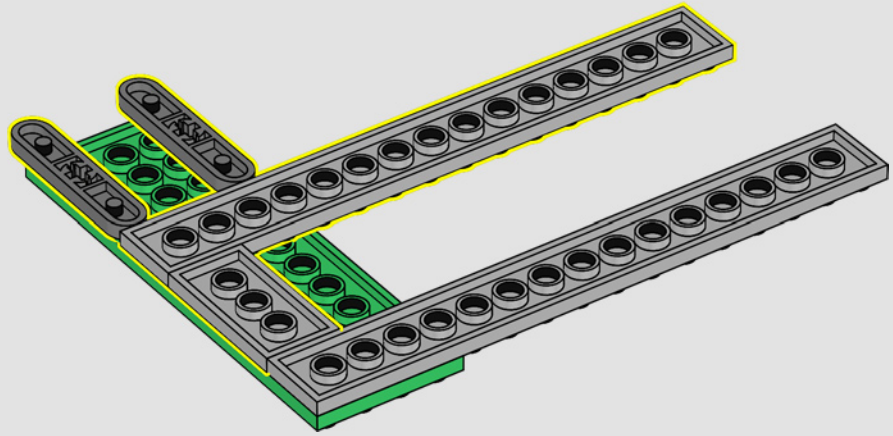

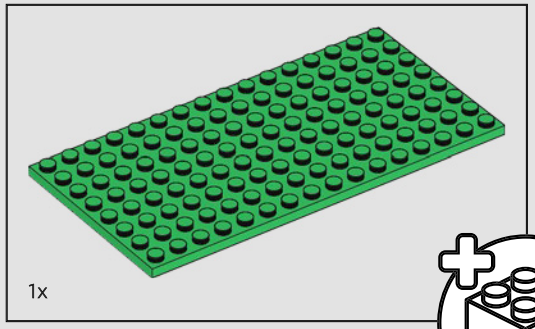

101

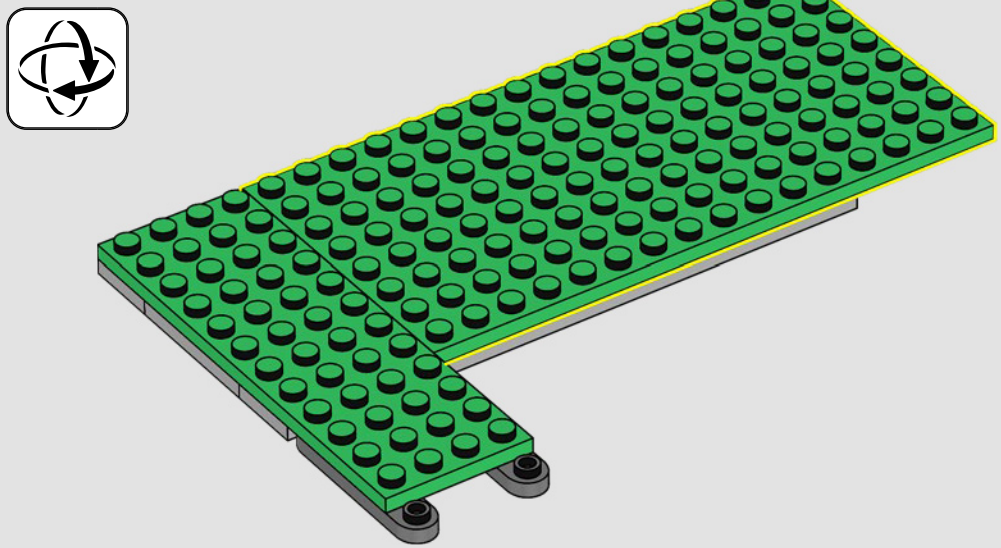

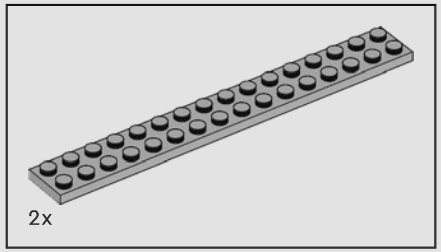

102

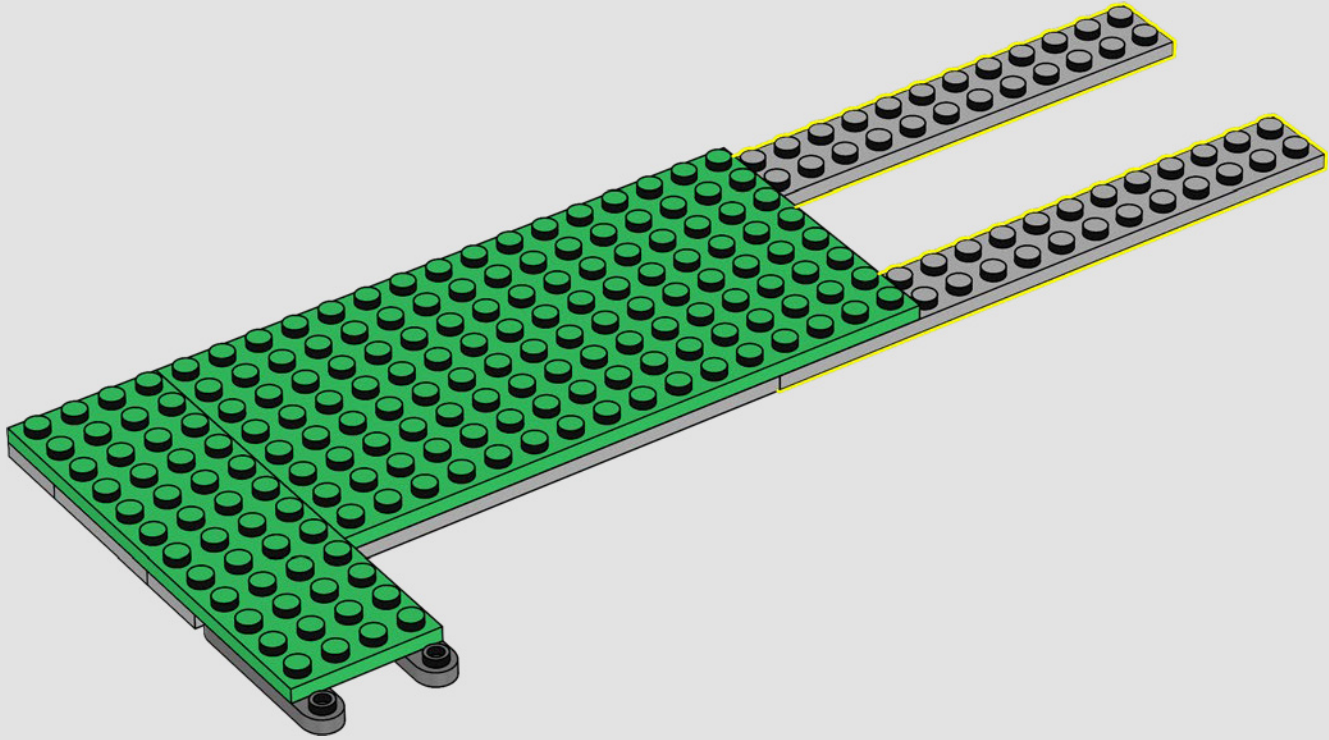

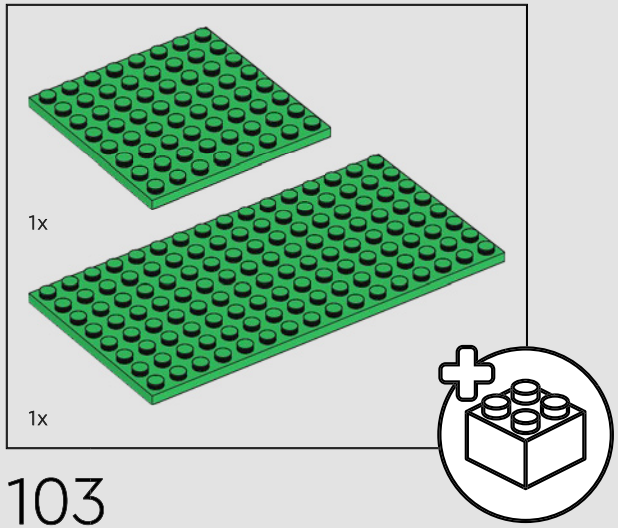

103

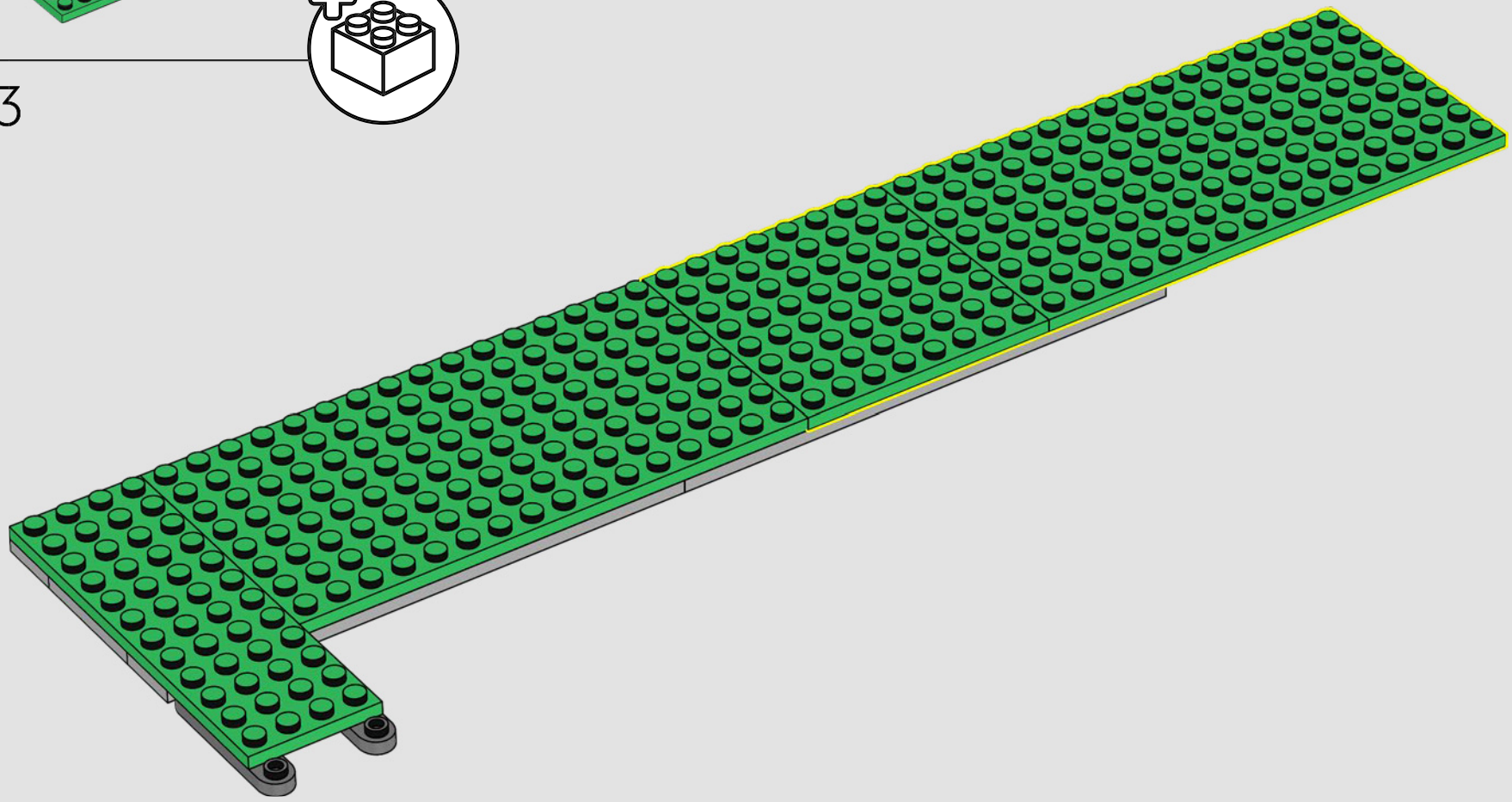

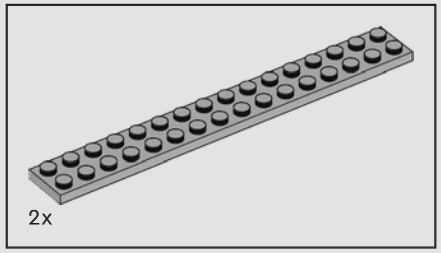

104

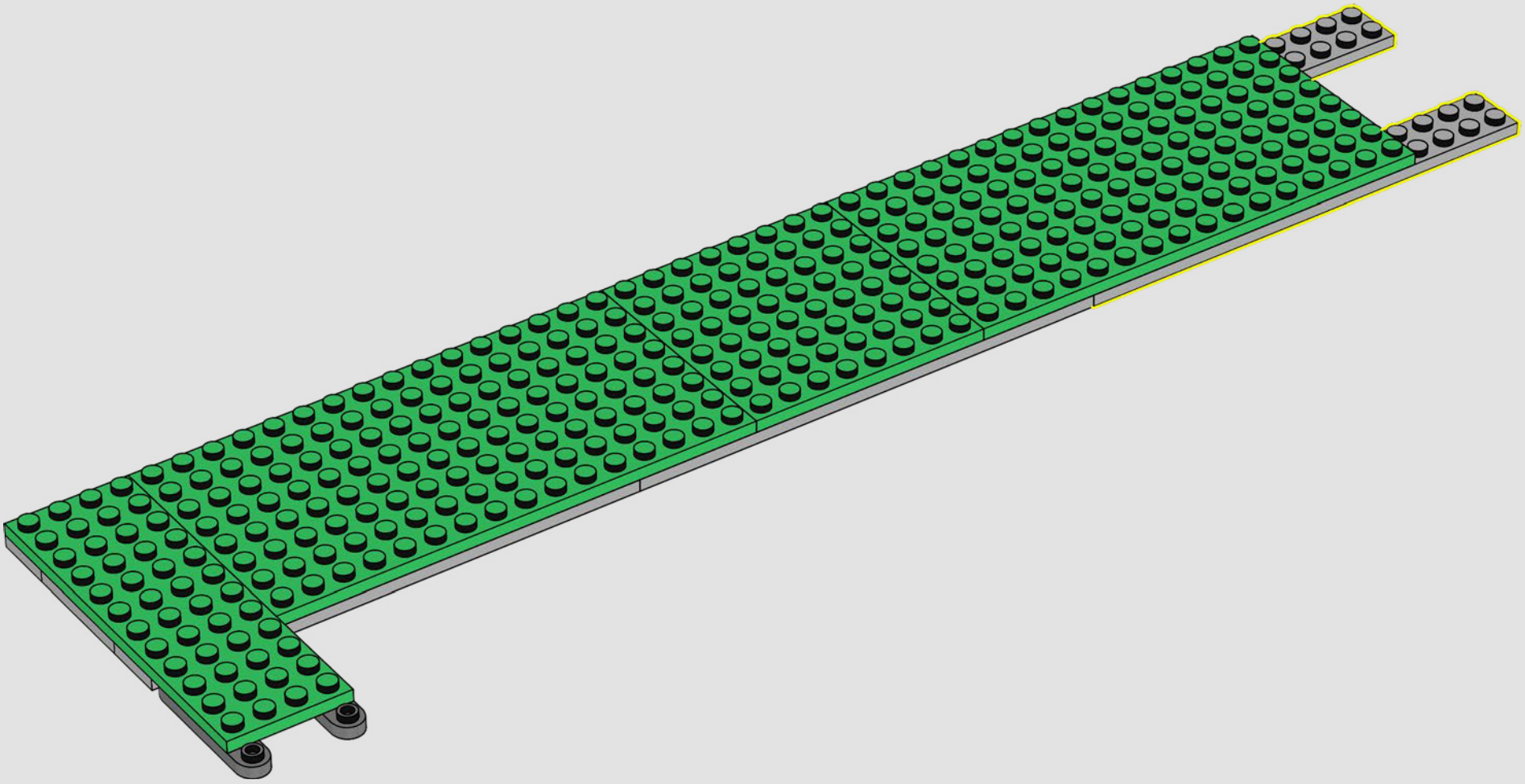

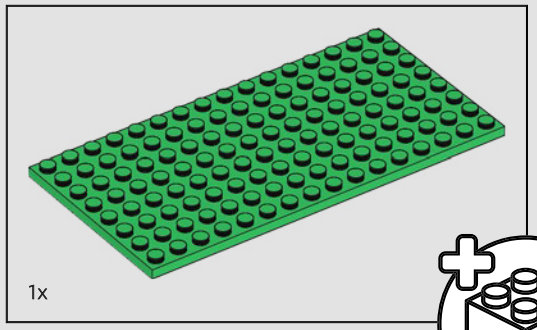

105

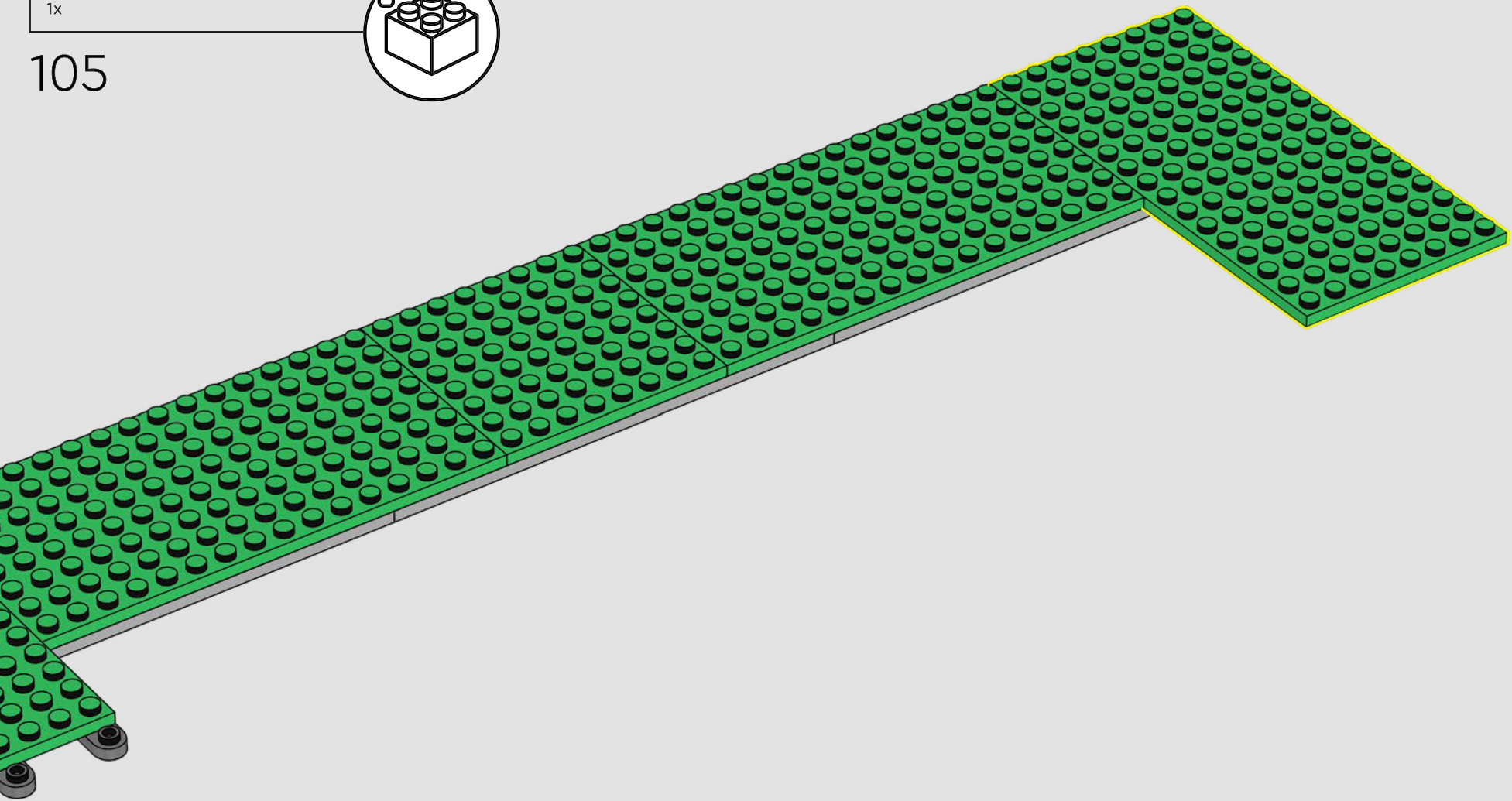

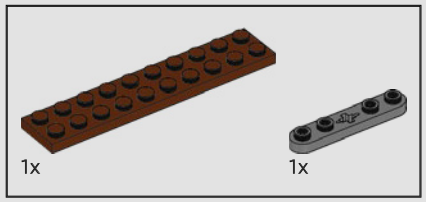

106

107

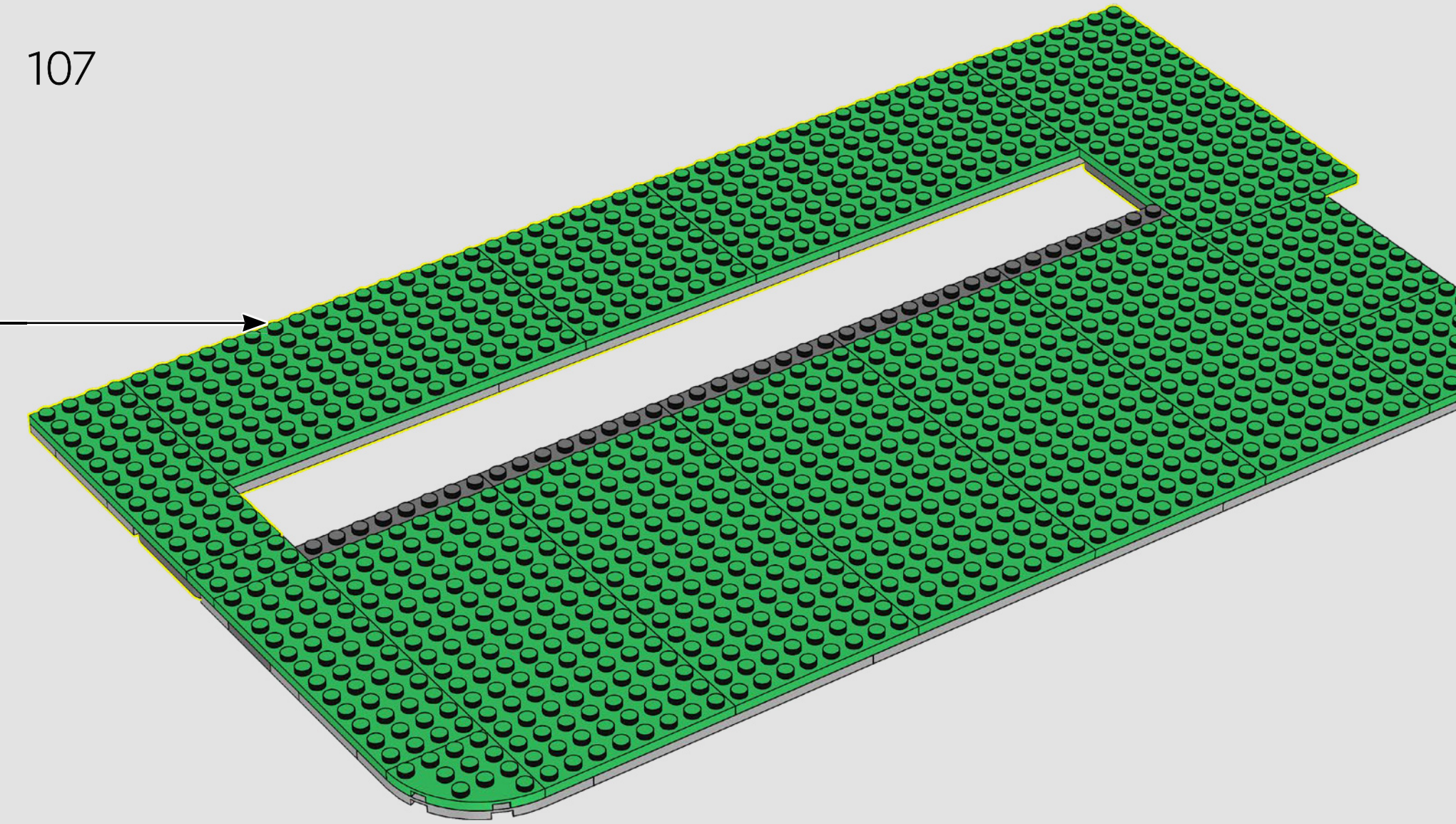

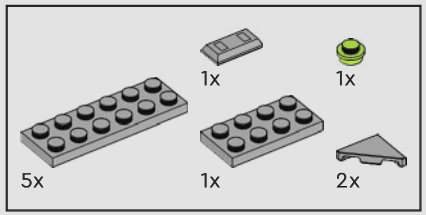

108

109

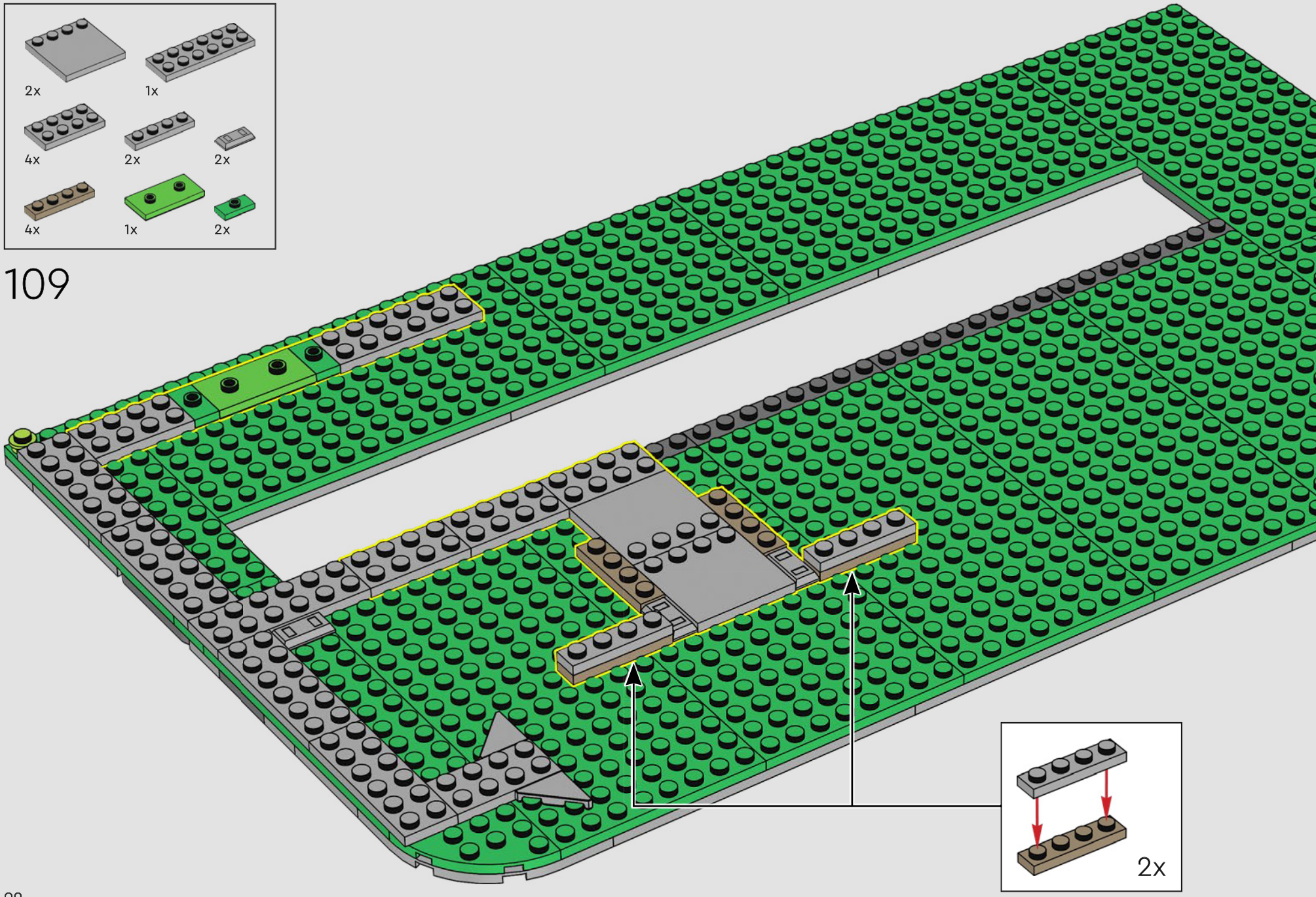

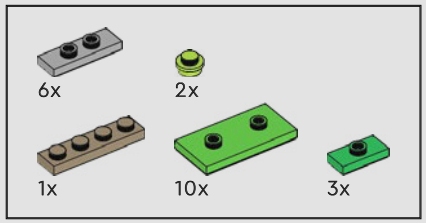

110

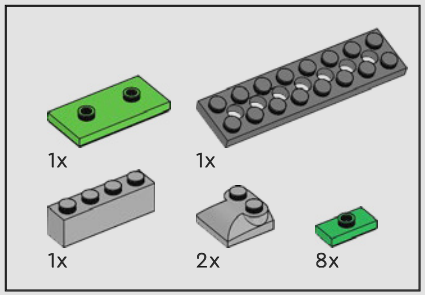

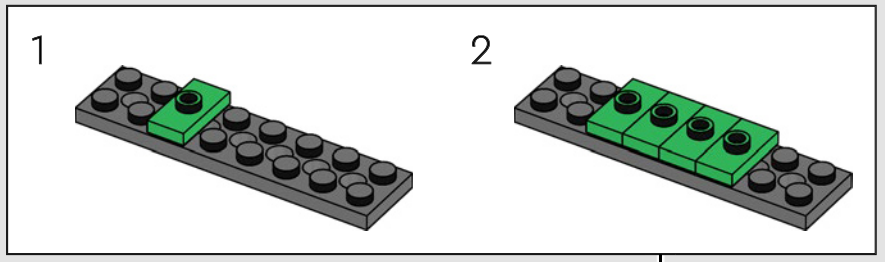

111

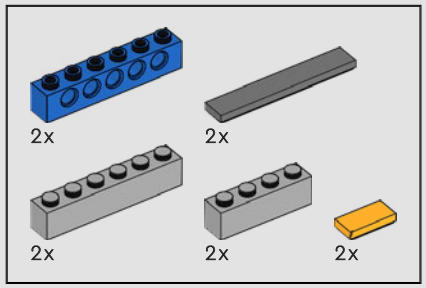

112

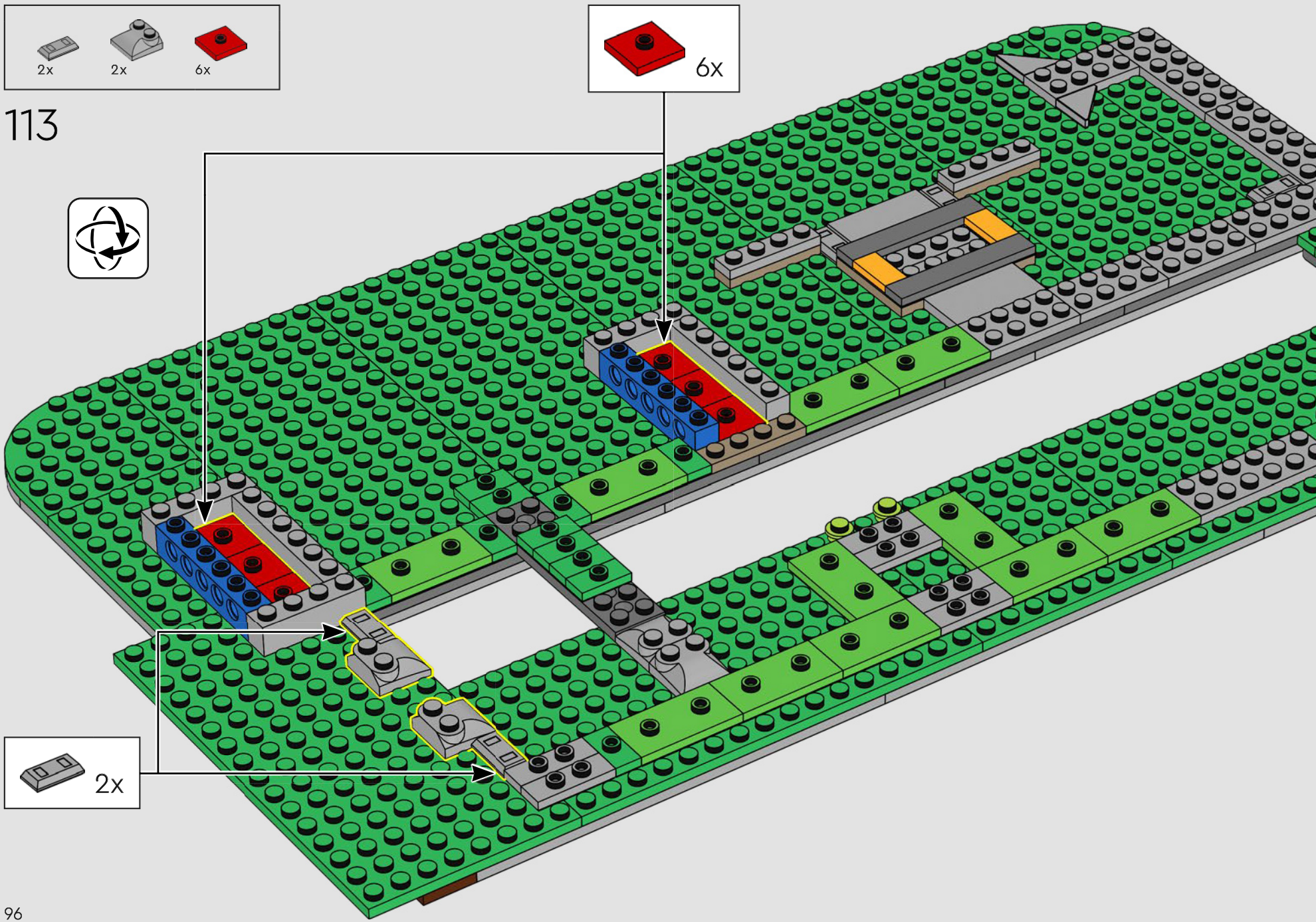

113

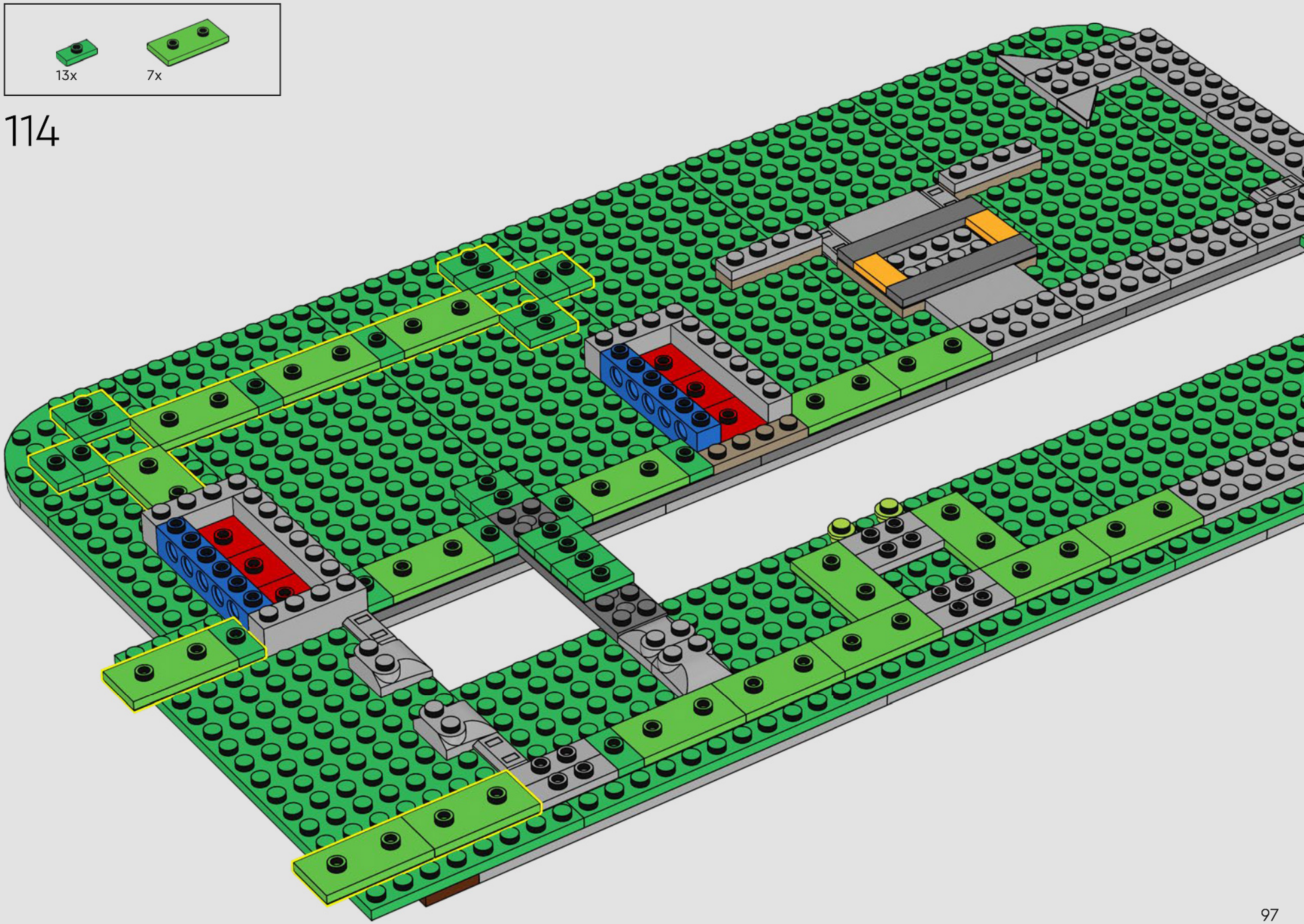

114

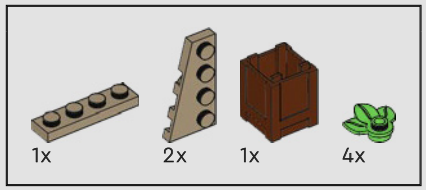

115

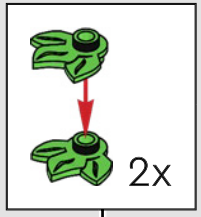

116

117

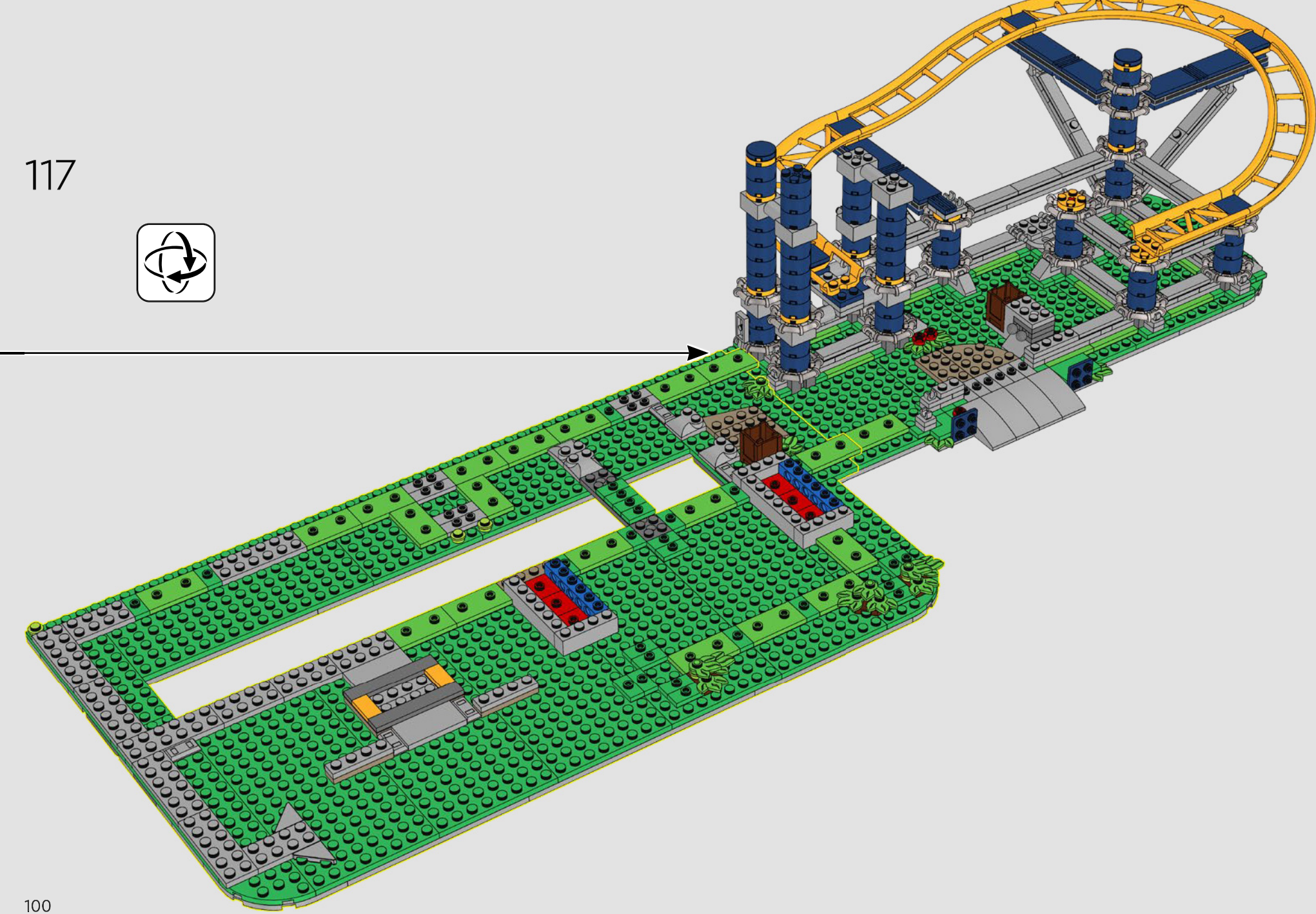

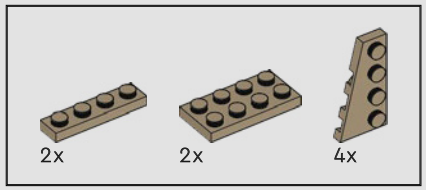

118

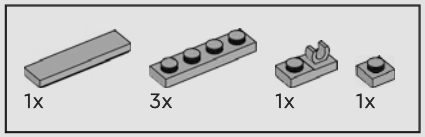

119

1

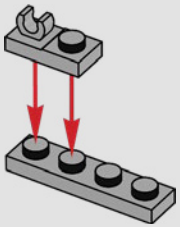

2

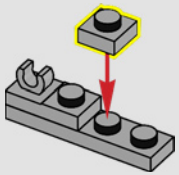

3

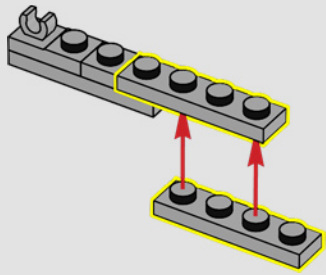

4

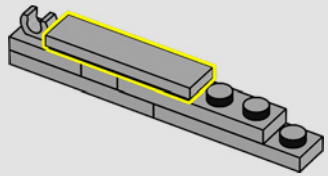

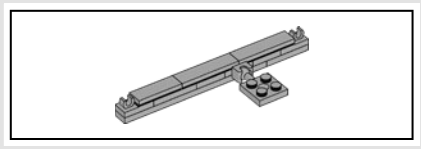

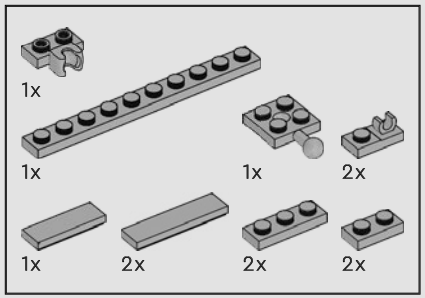

120

1

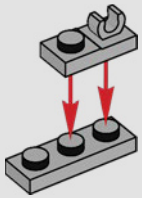

2

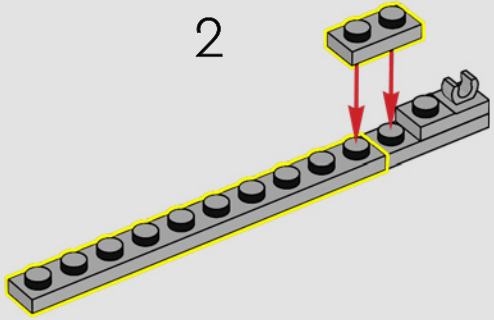

3

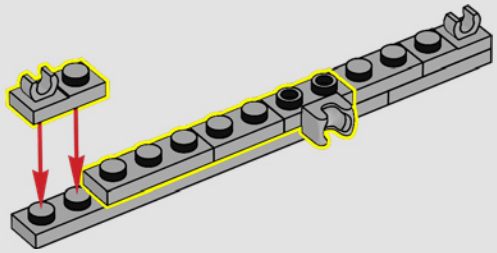

4

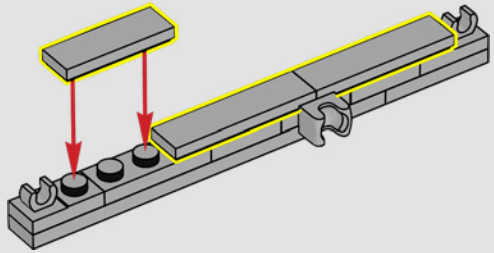

5

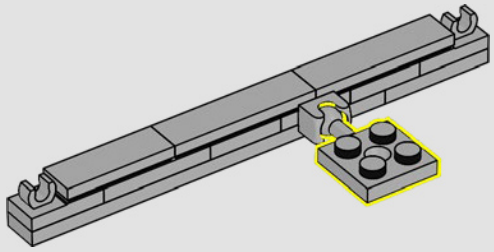

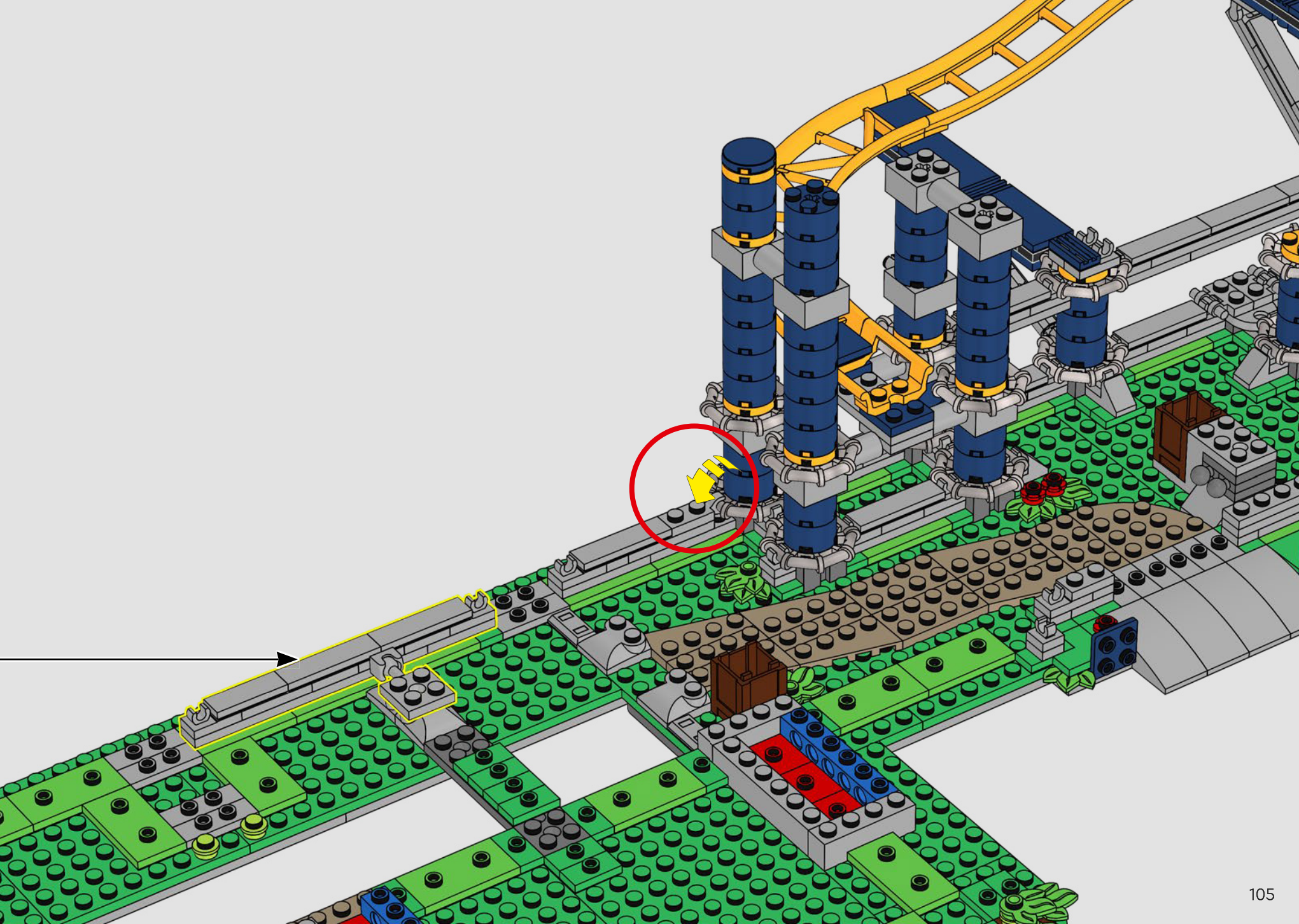

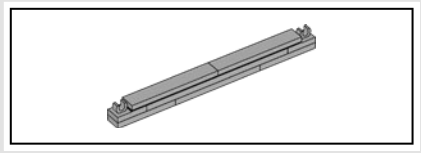

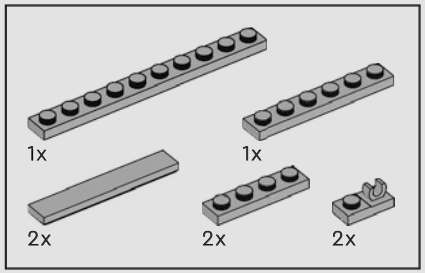

121

1

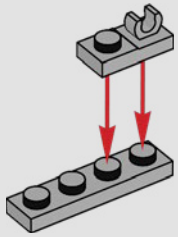

2

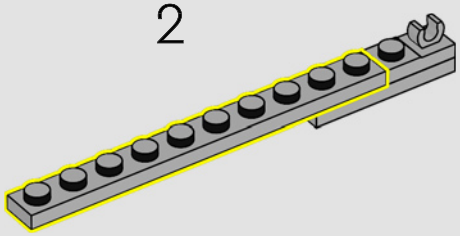

3

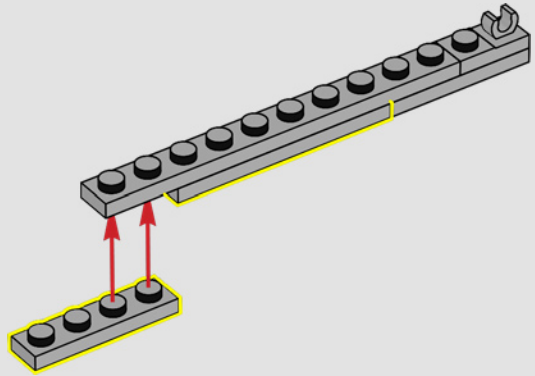

4

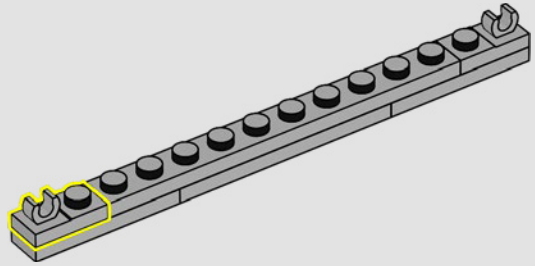

5

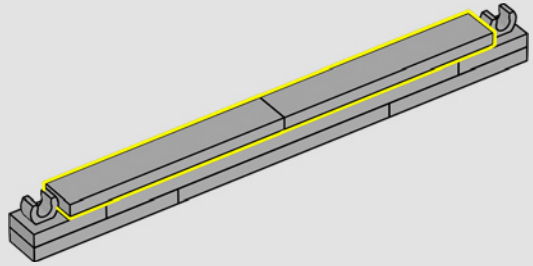

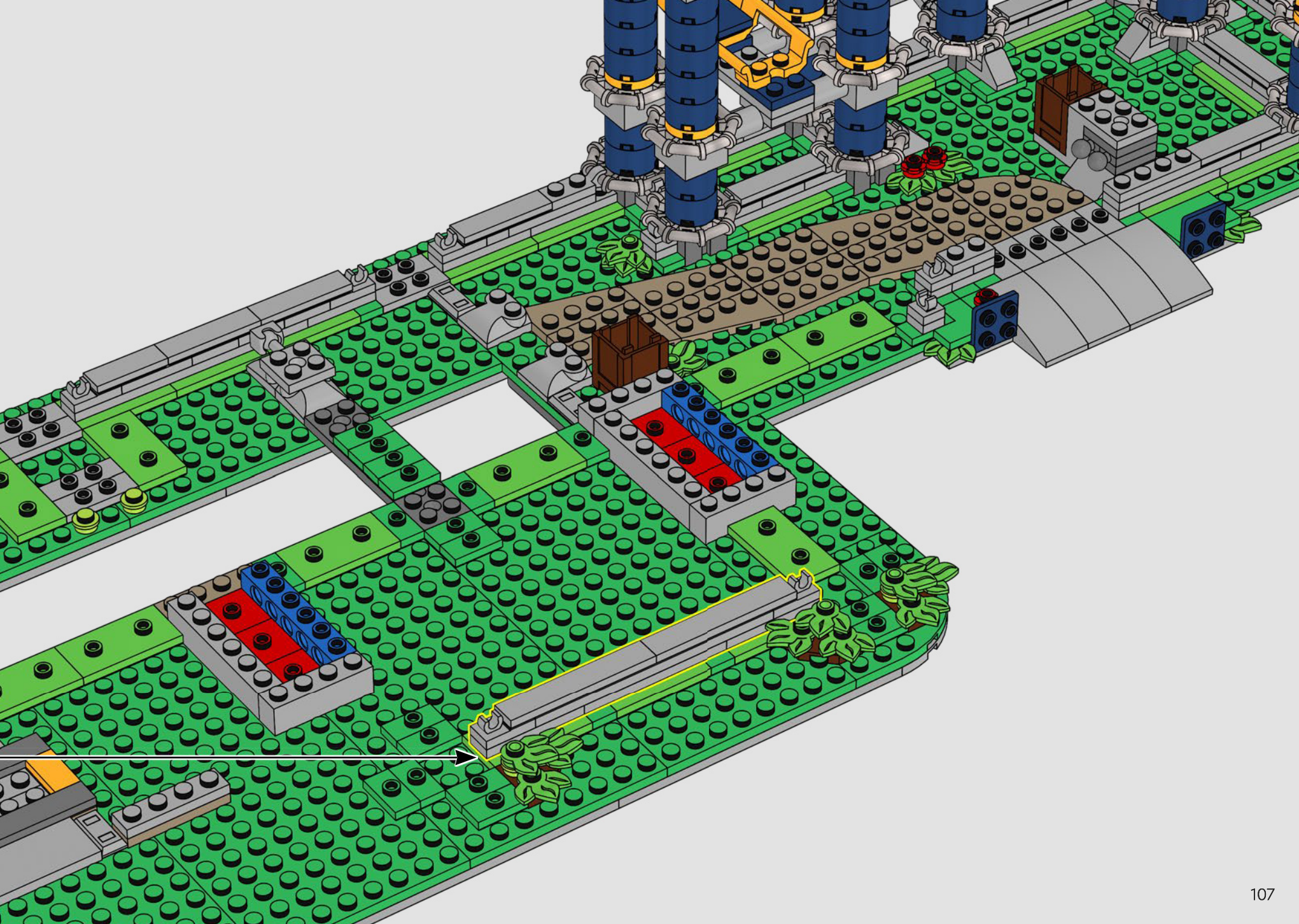

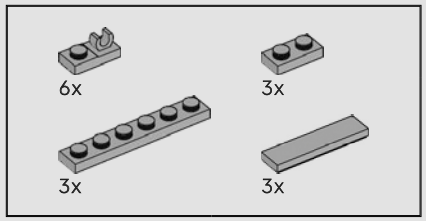

122

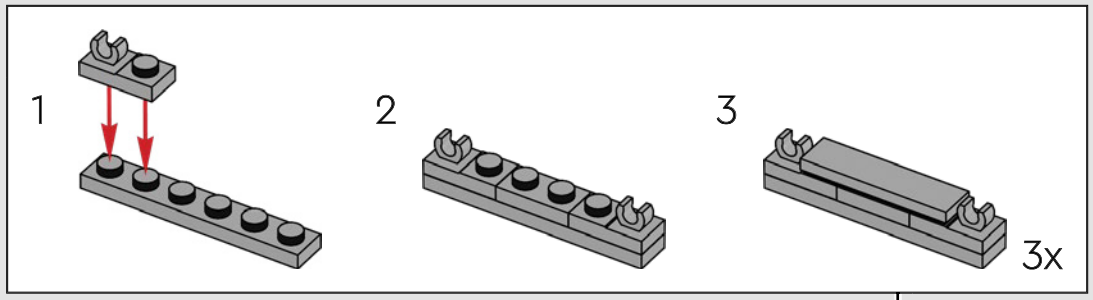

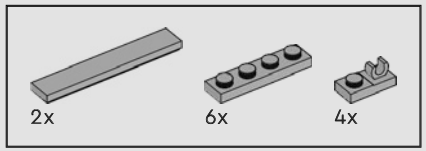

123

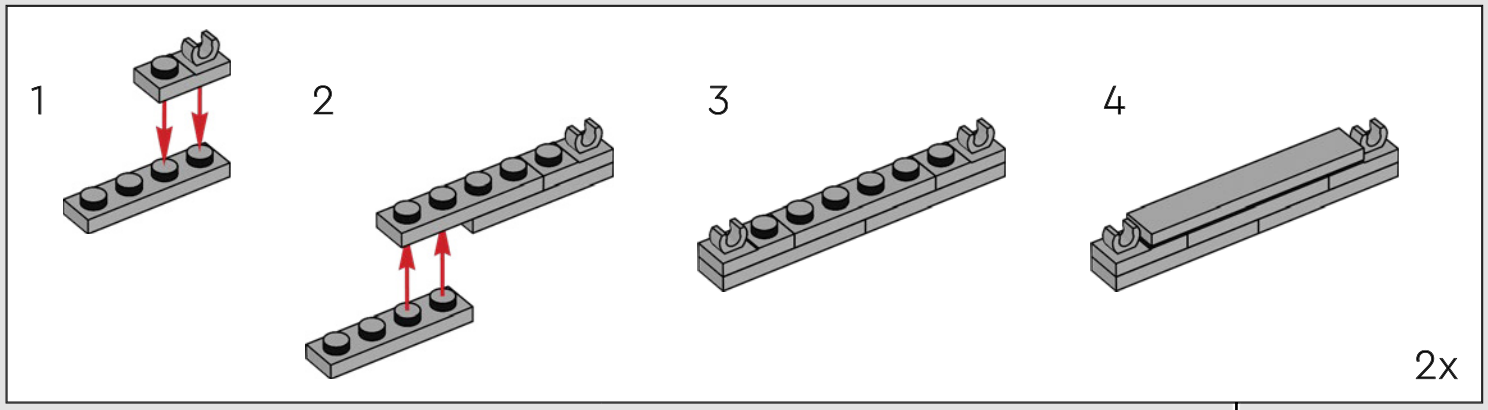

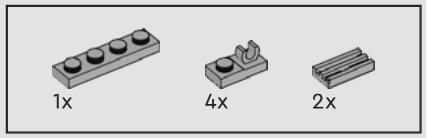

124

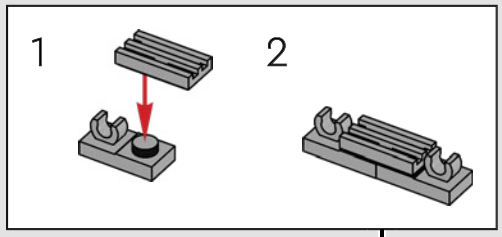

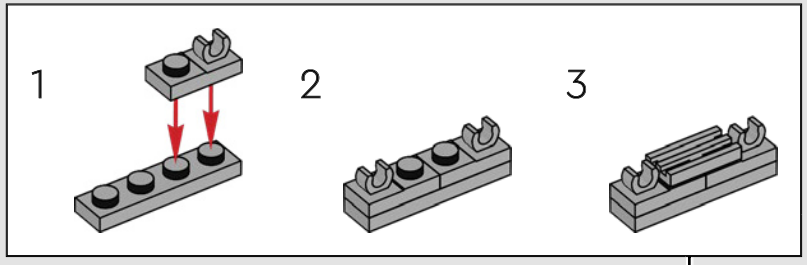

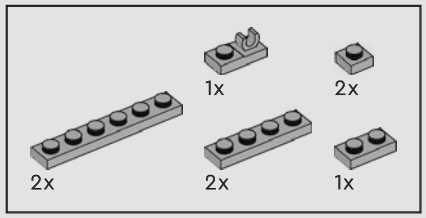

125

1

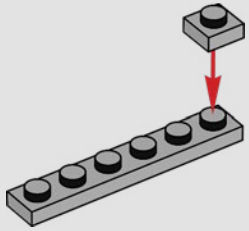

2

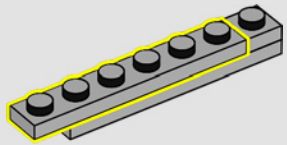

3

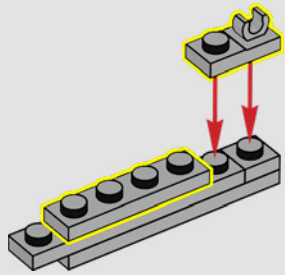

4

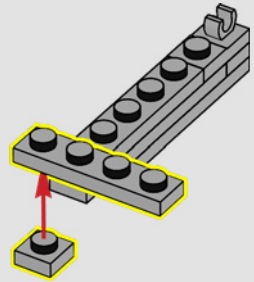

5

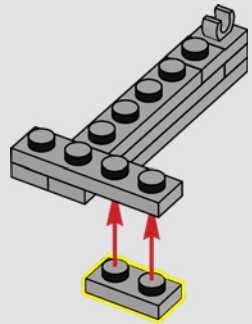

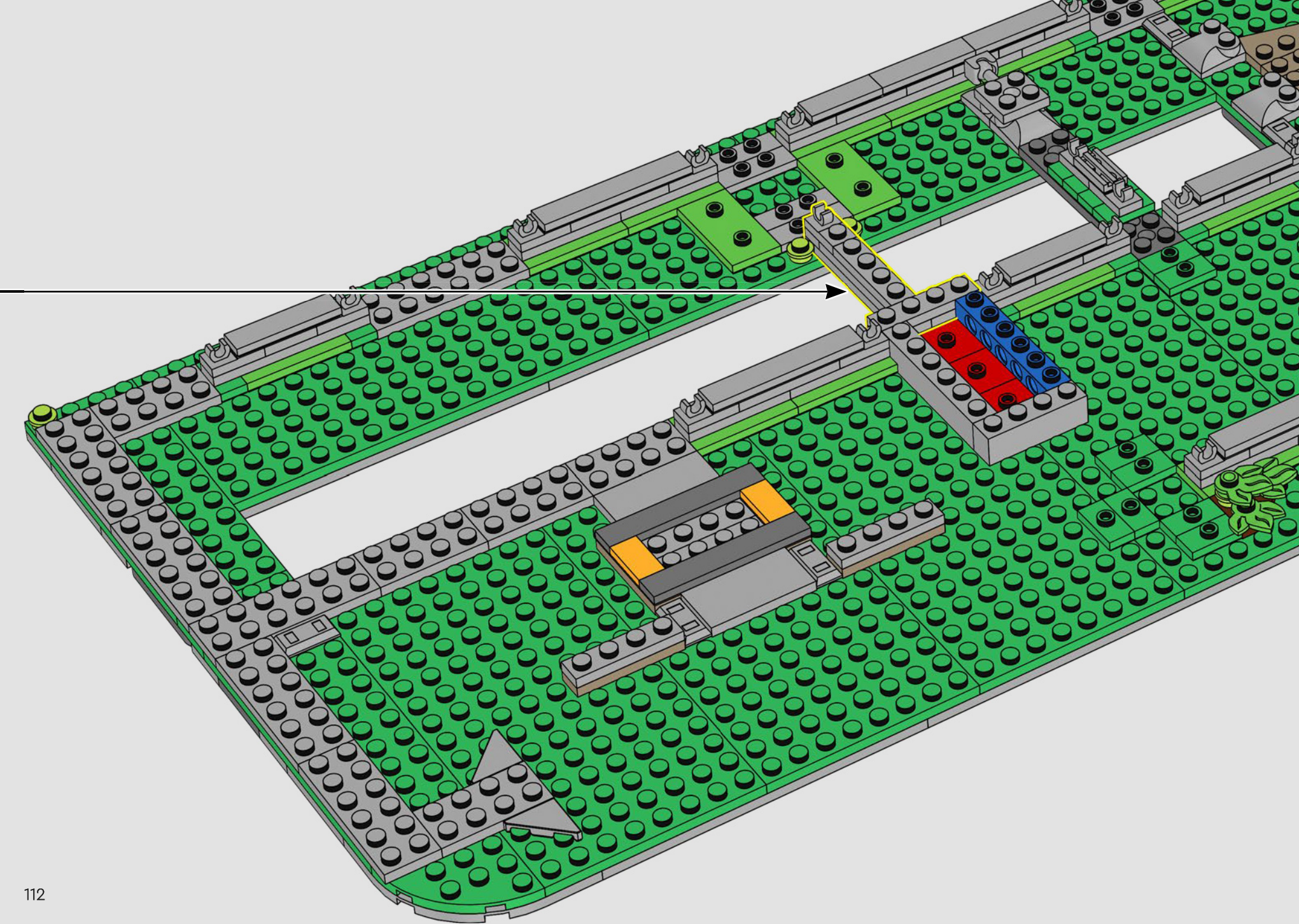

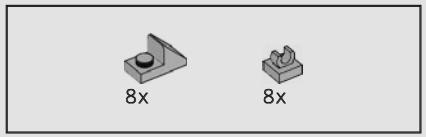

126

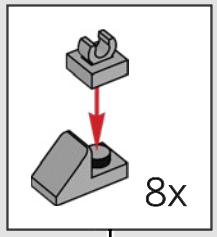

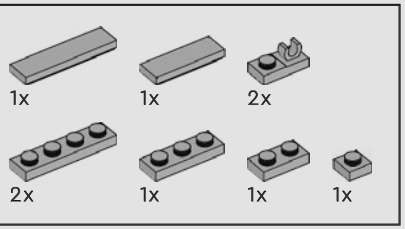

127

1

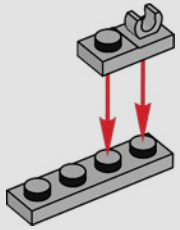

2

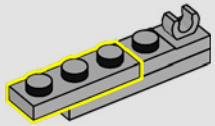

3

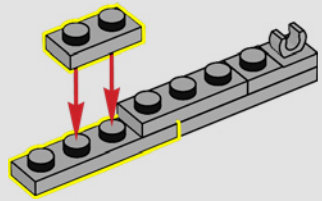

4

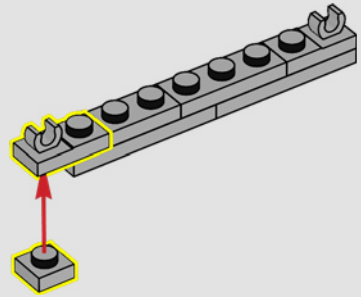

5

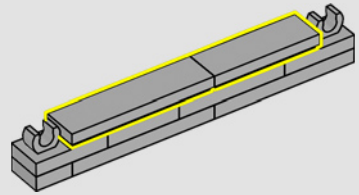

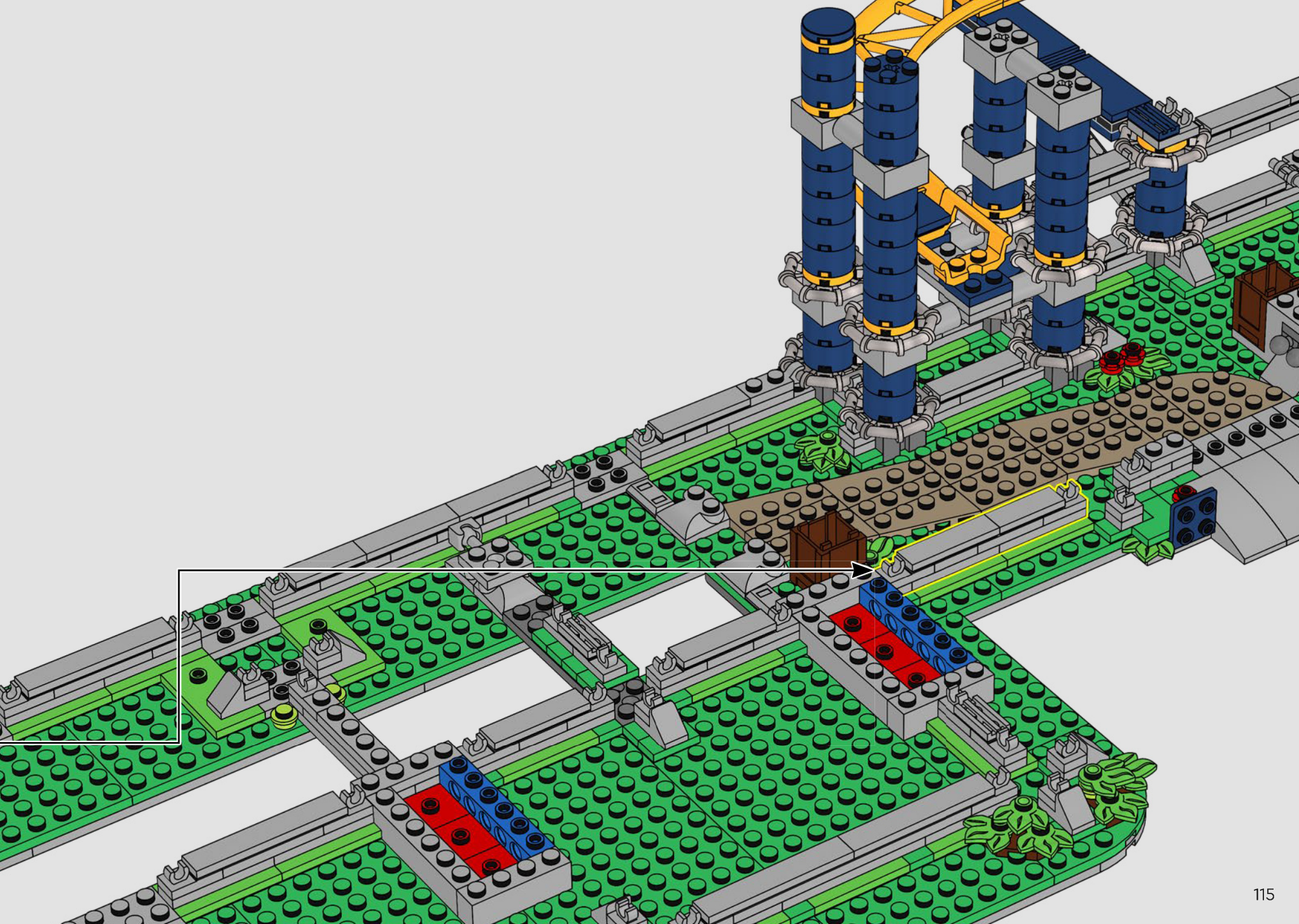

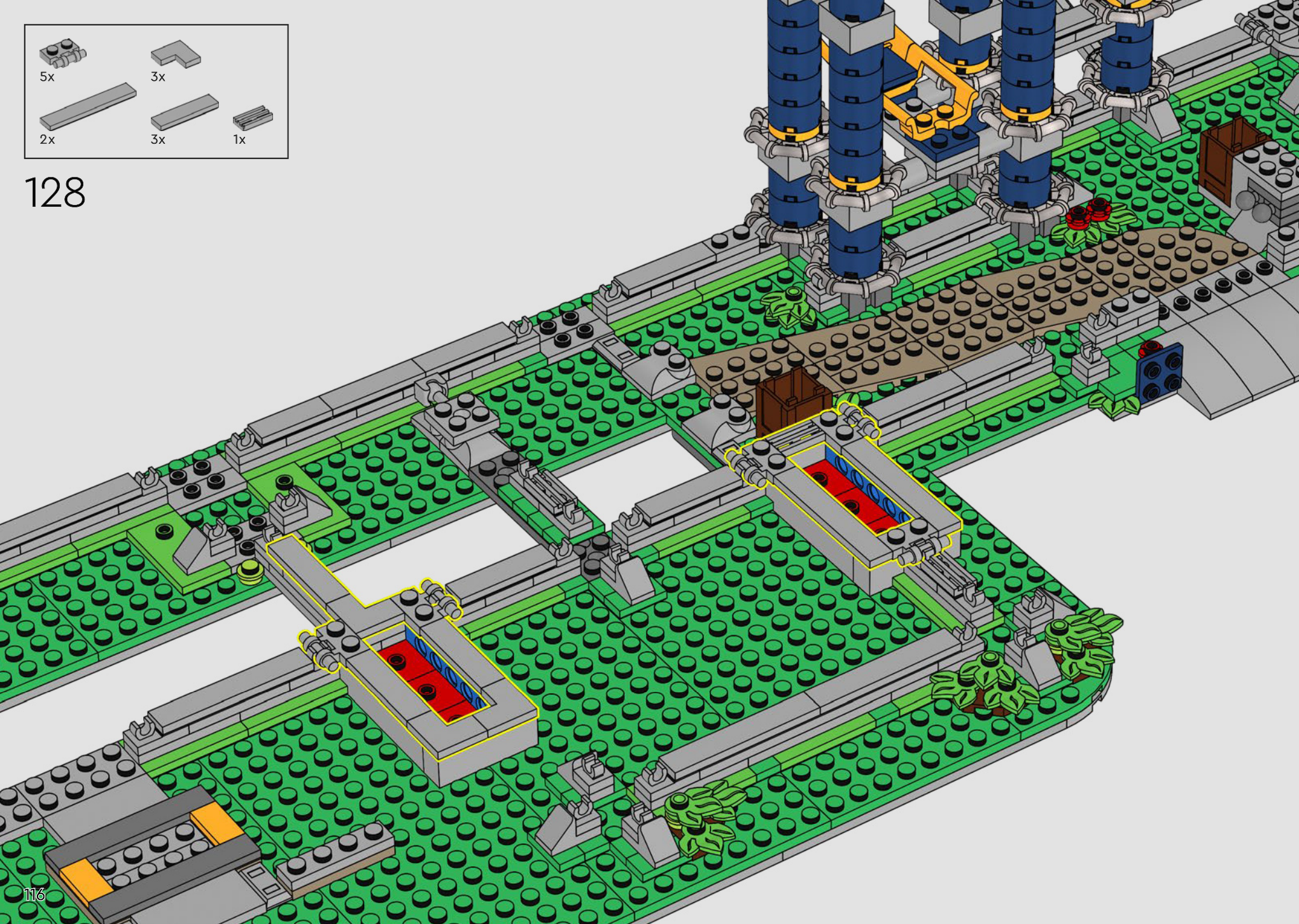

128

129

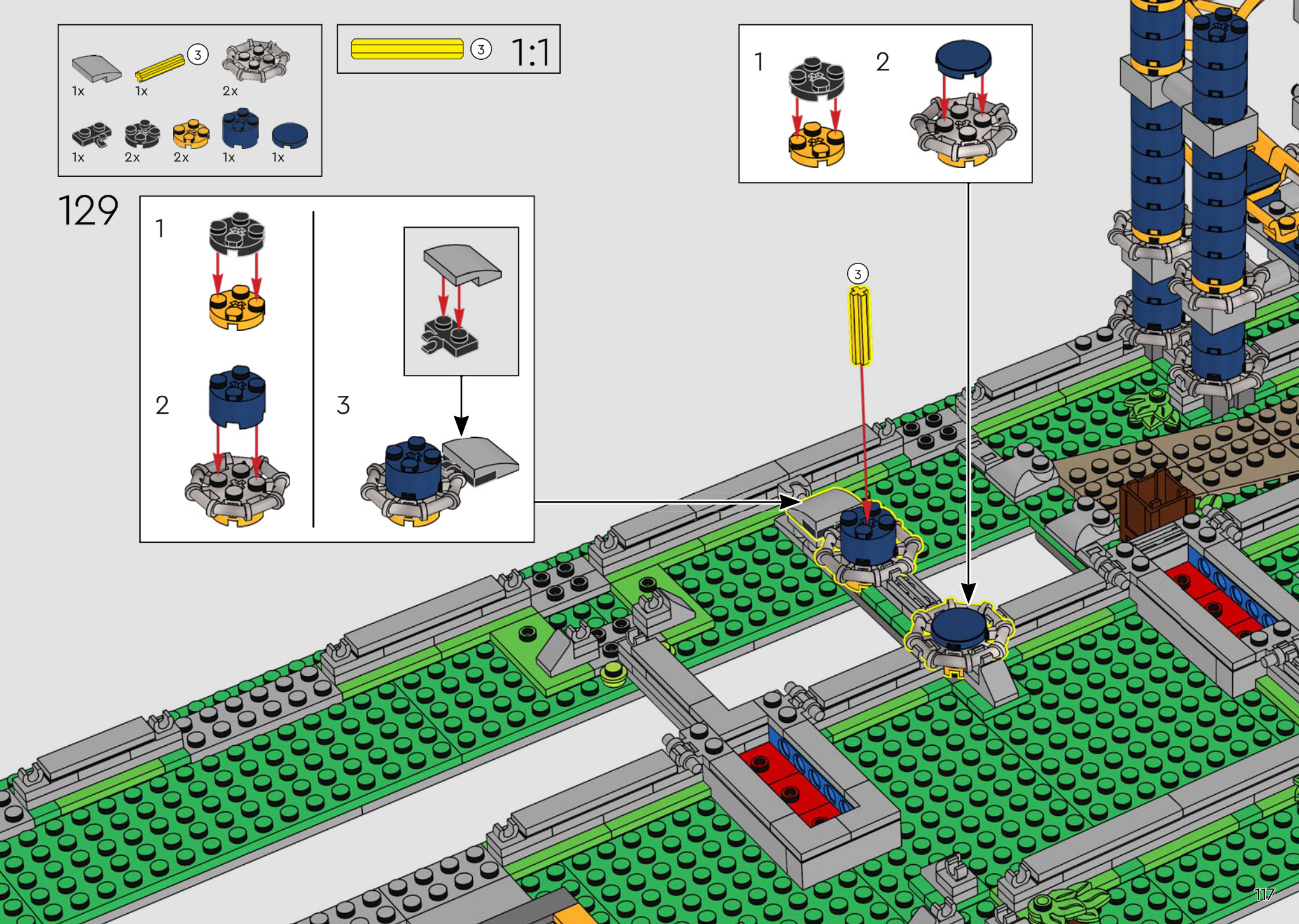

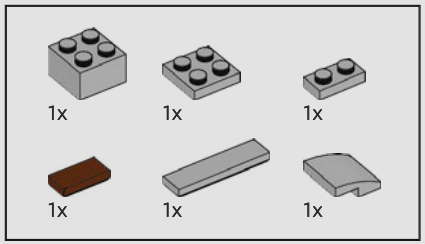

130

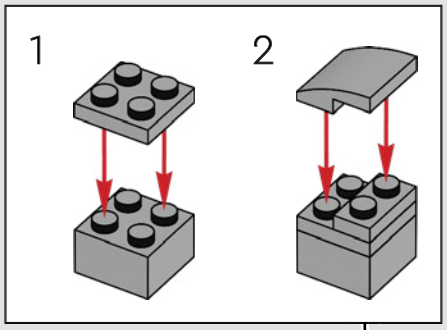

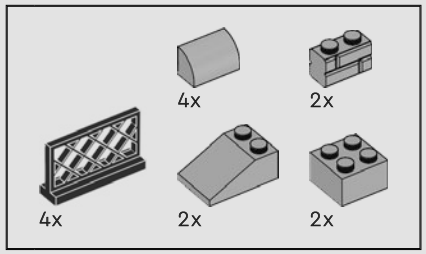

131

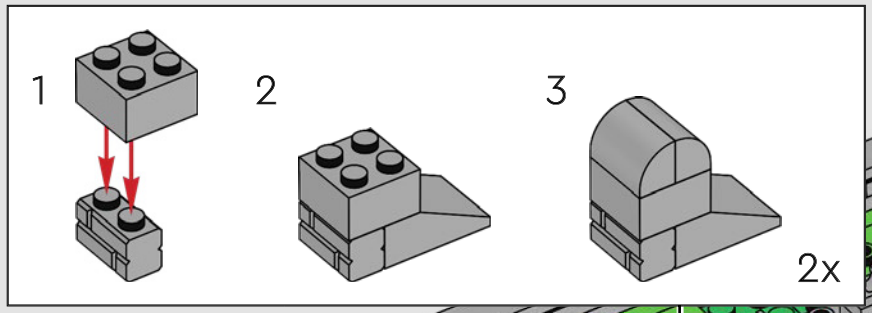

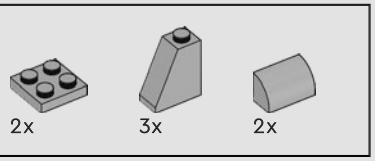

132

1

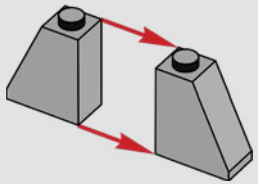

2

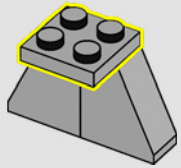

3

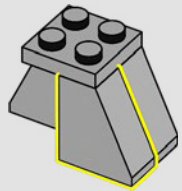

4

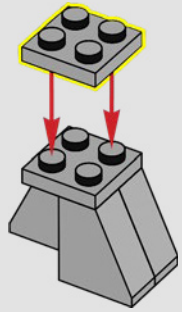

5

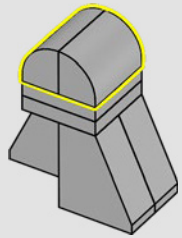

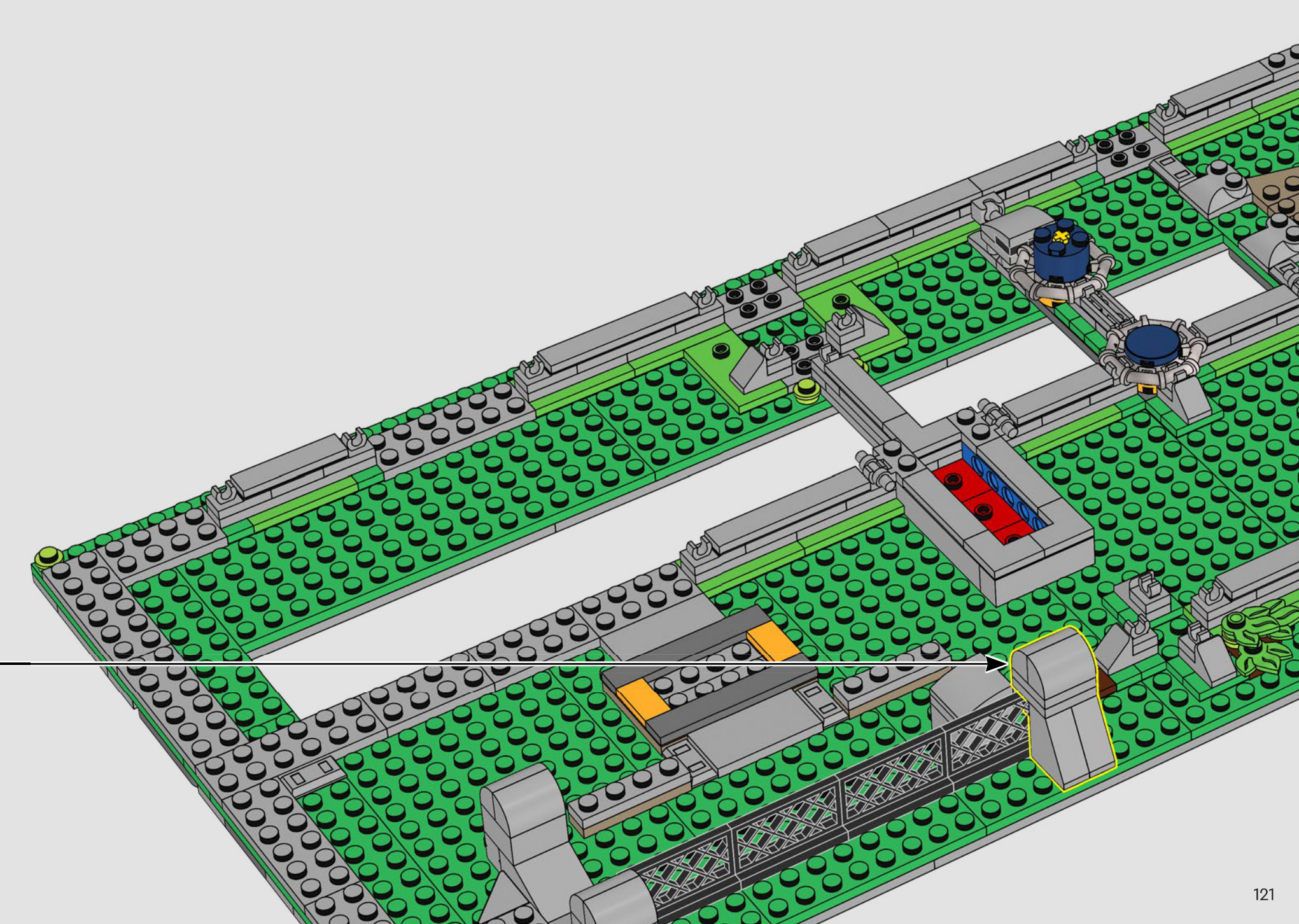

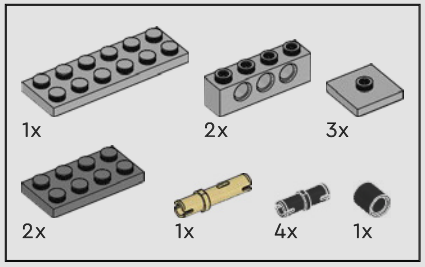

133

1

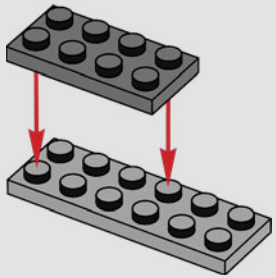

2

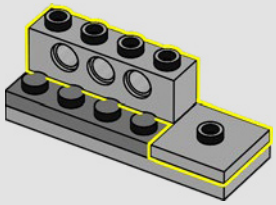

3

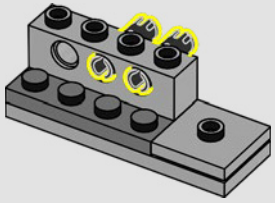

4

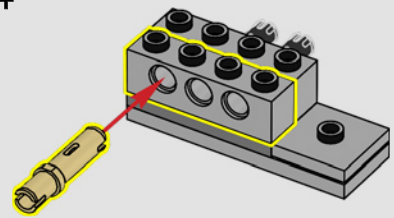

5

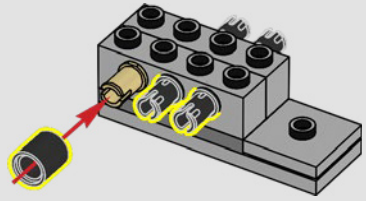

6

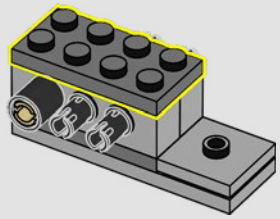

7

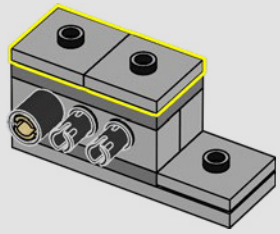

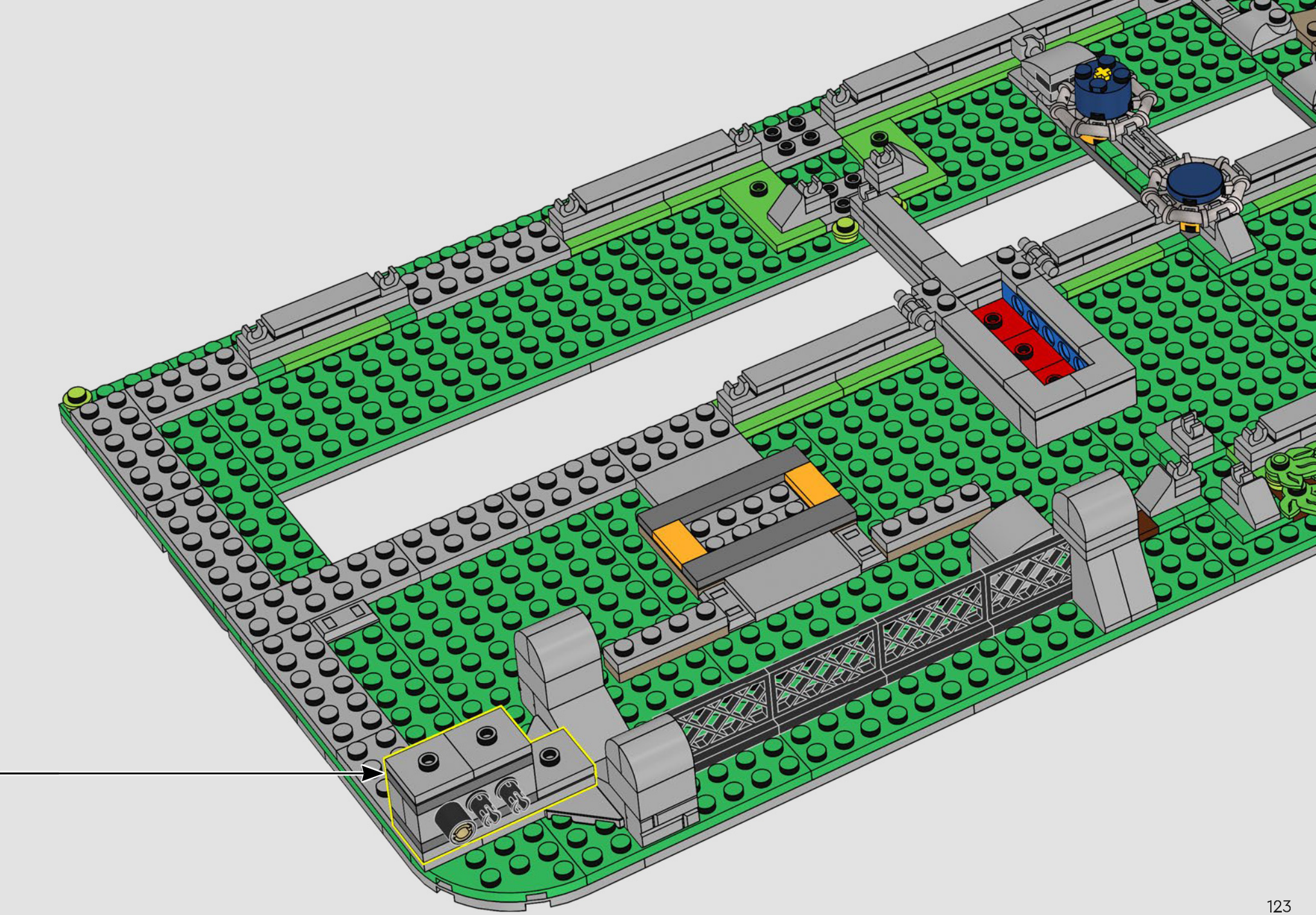

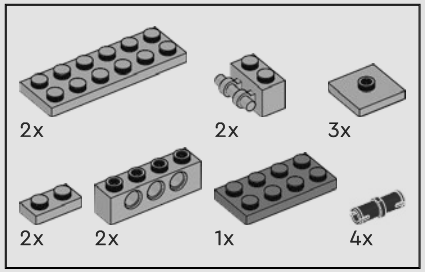

134

1

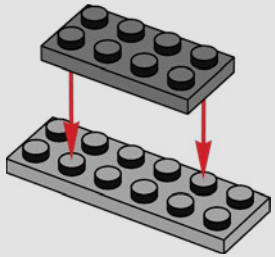

2

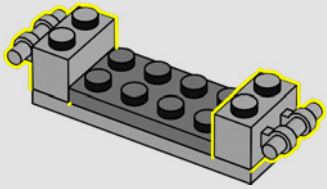

3

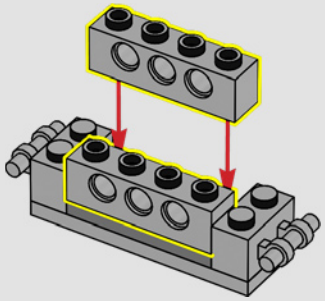

4

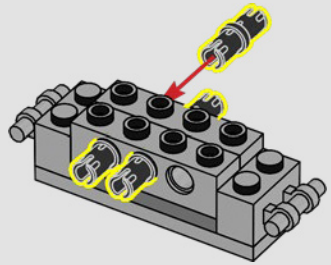

5

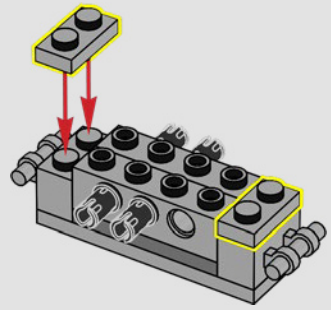

6

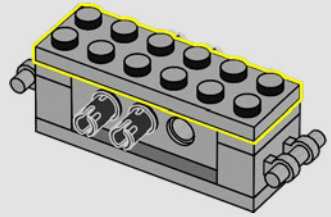

7

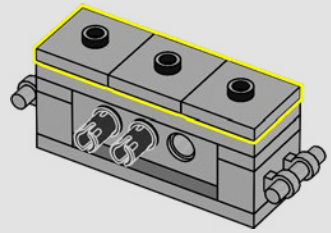

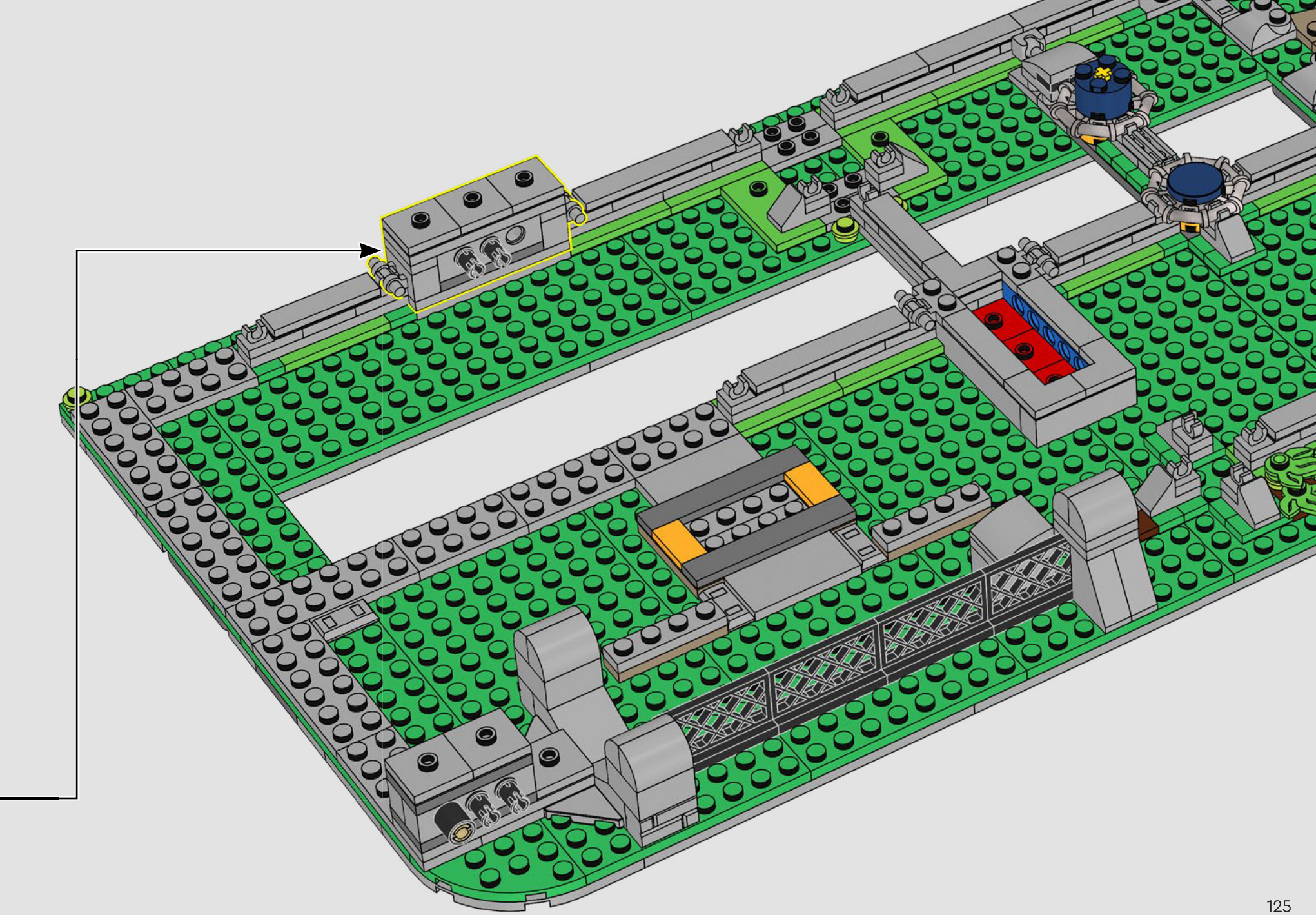

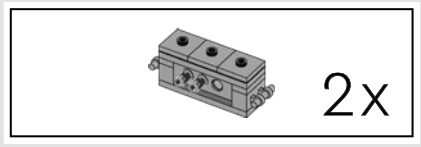

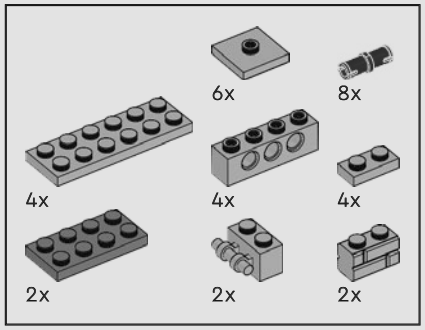

135

1

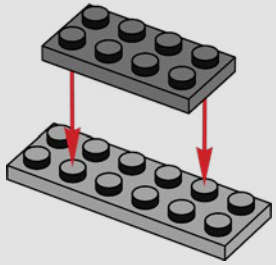

2

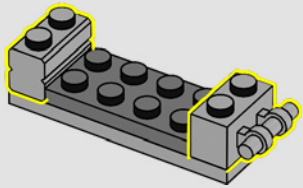

3

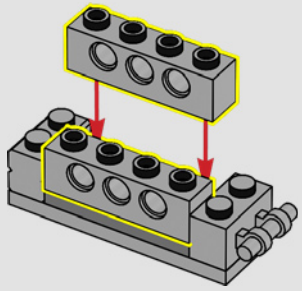

4

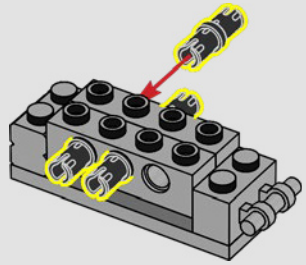

5

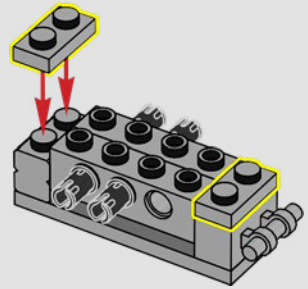

6

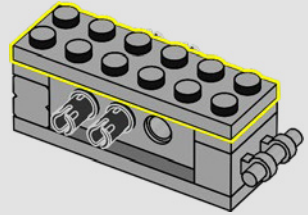

7

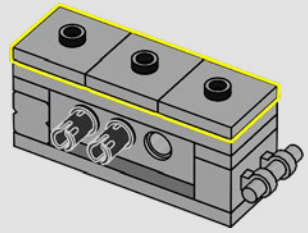

2x

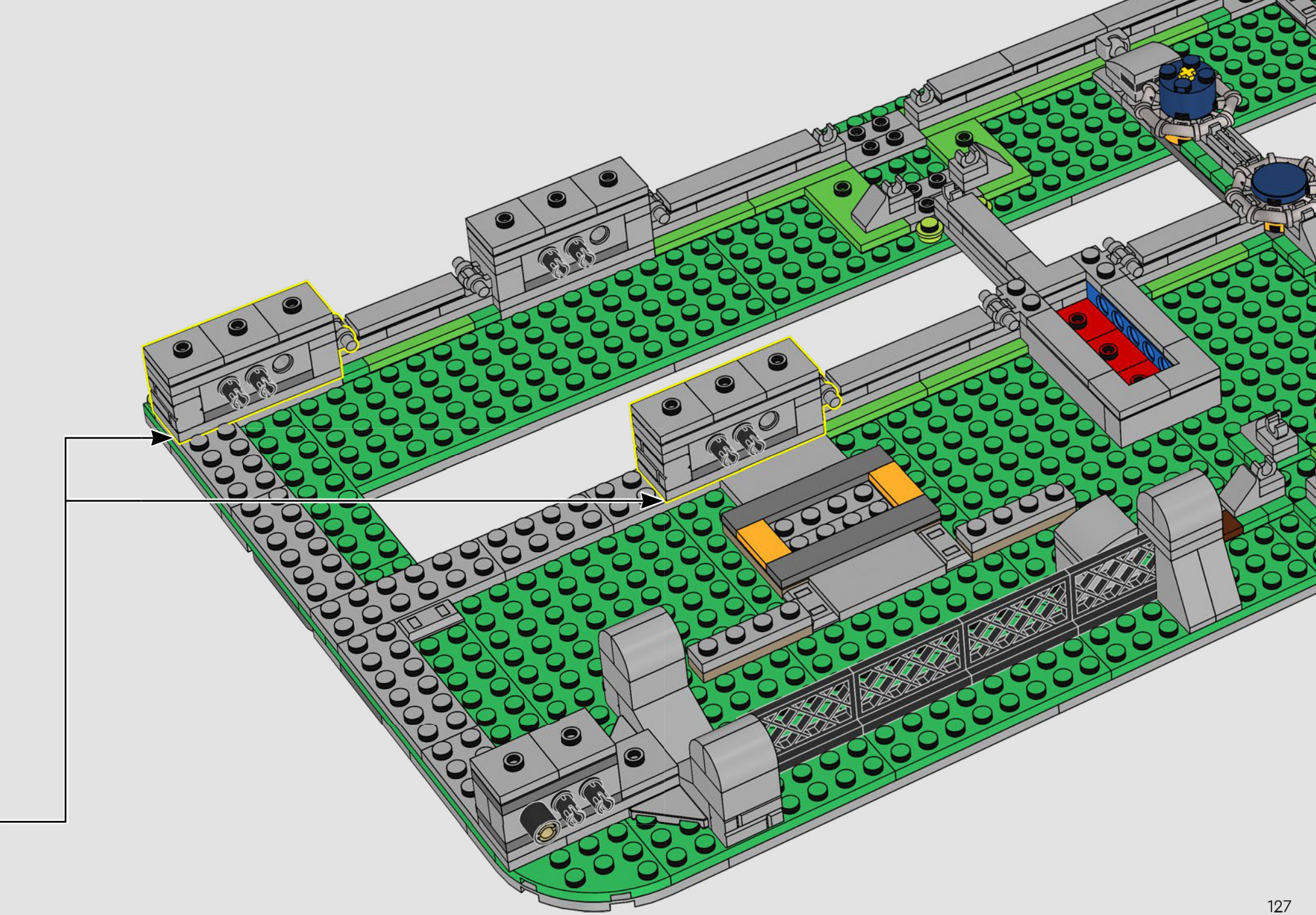

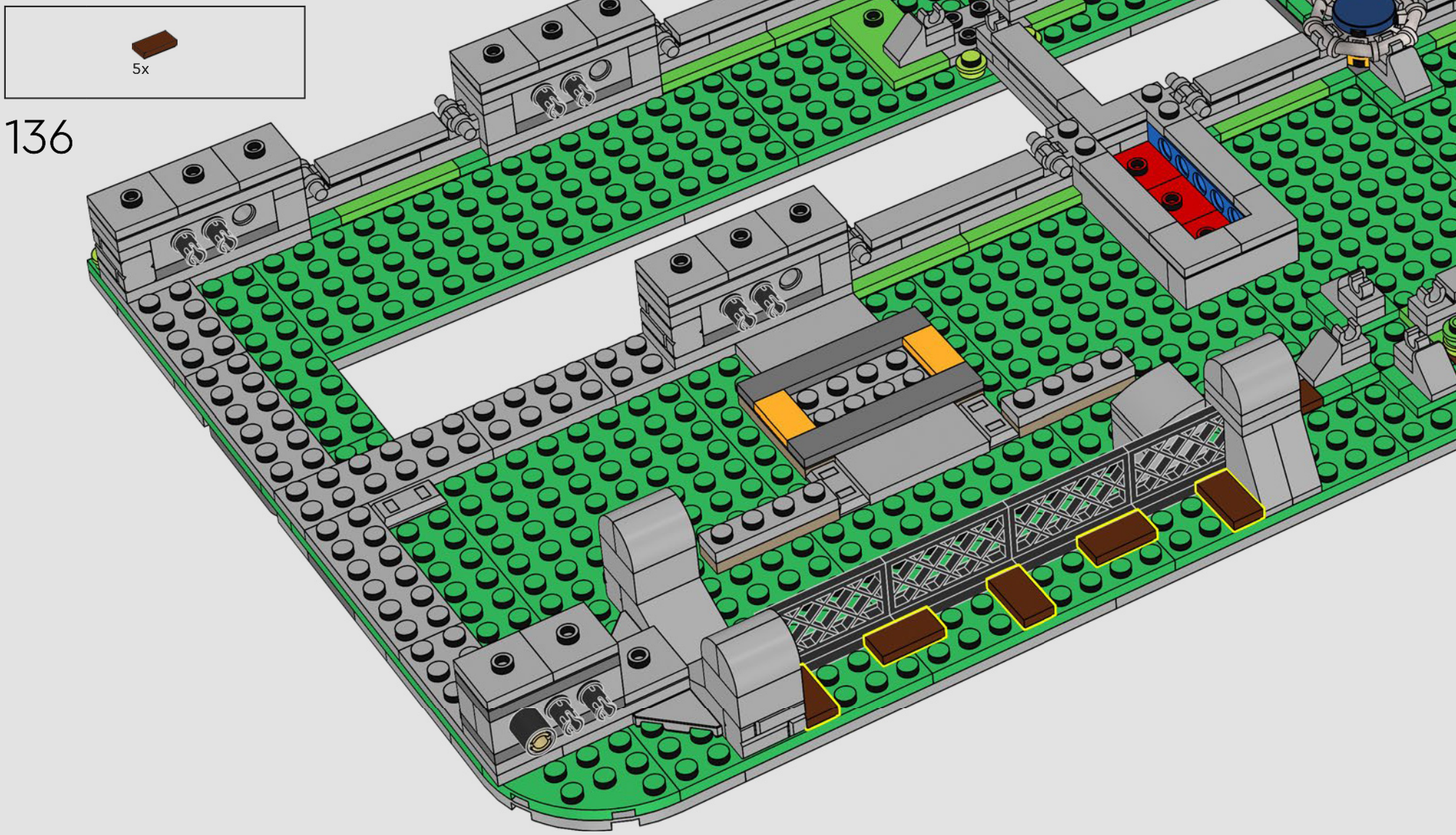

136

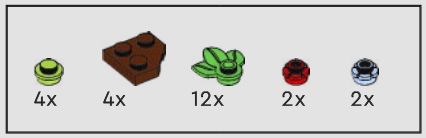

137

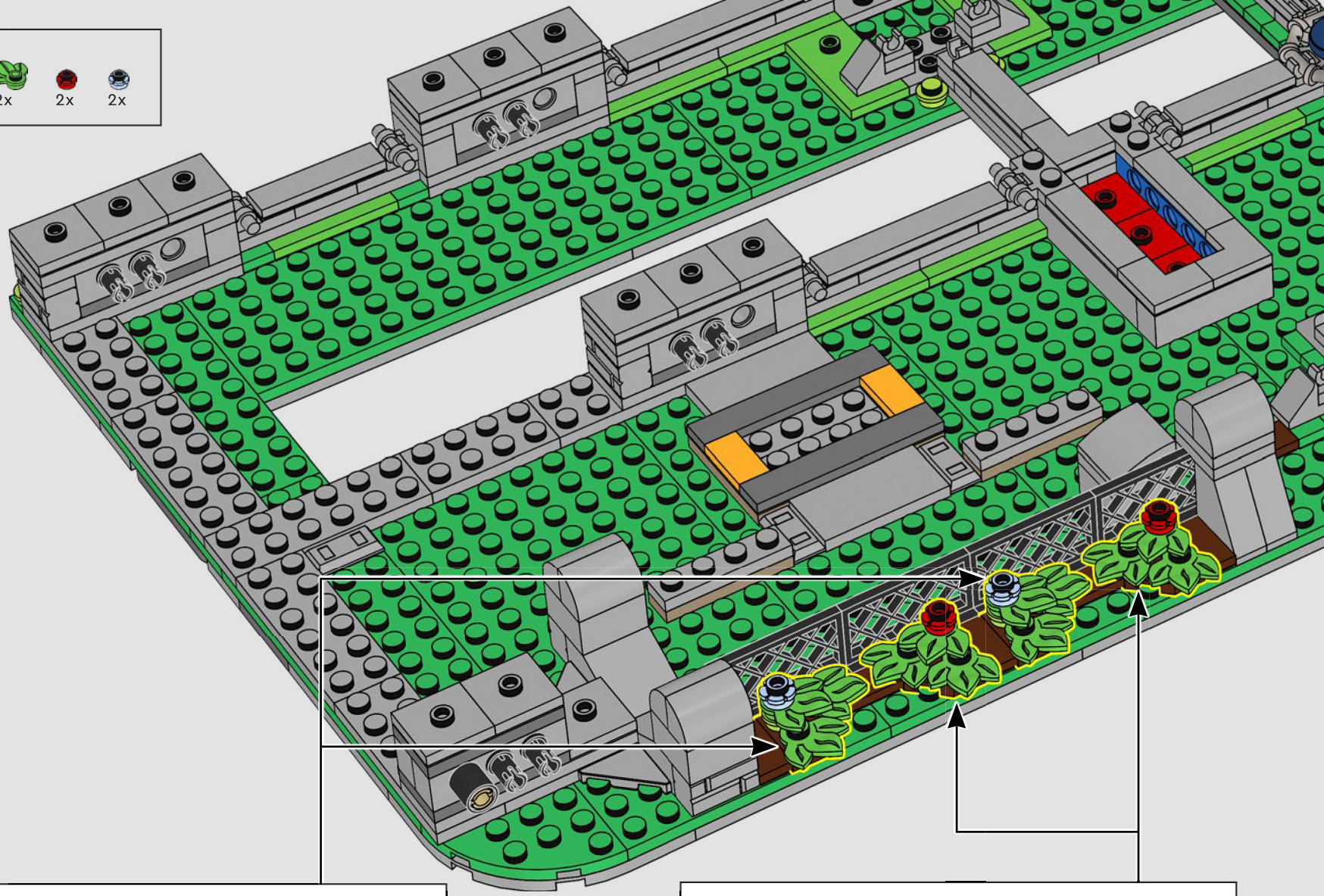

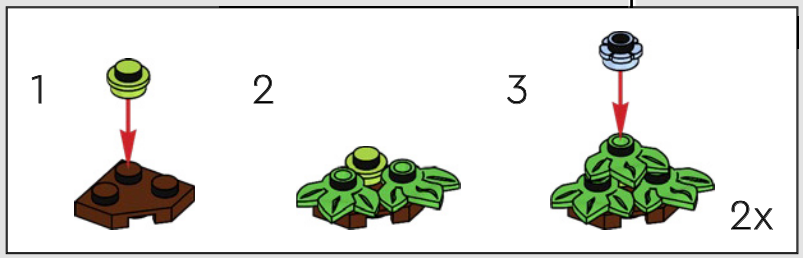

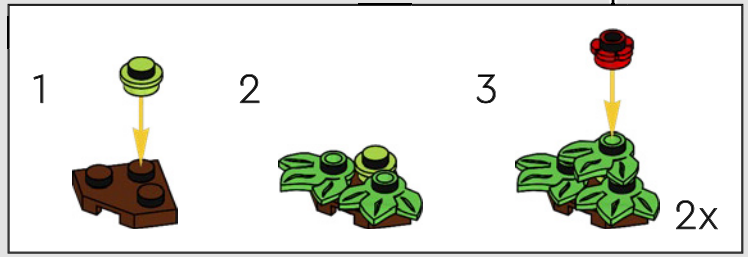

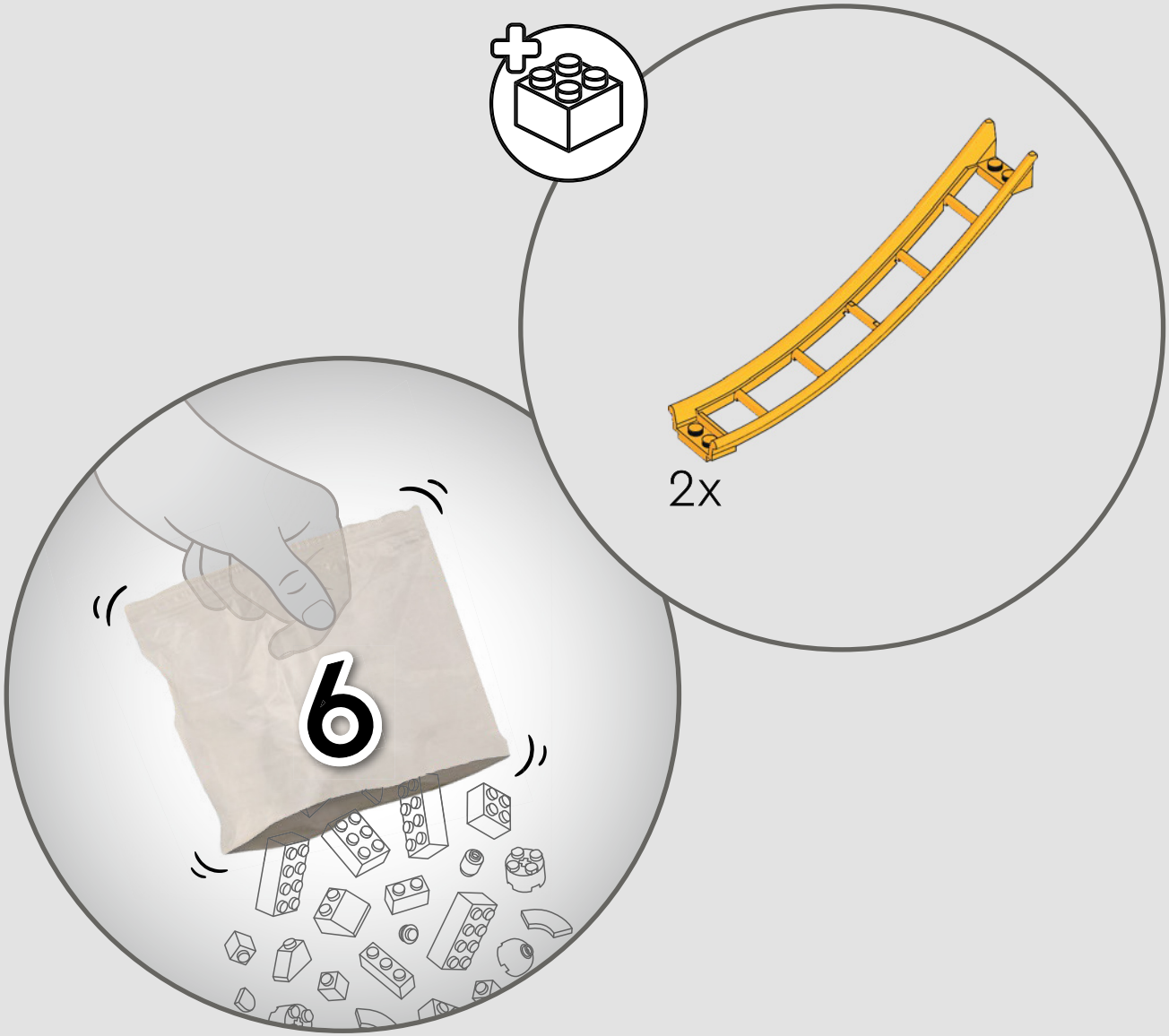
2x
6

138

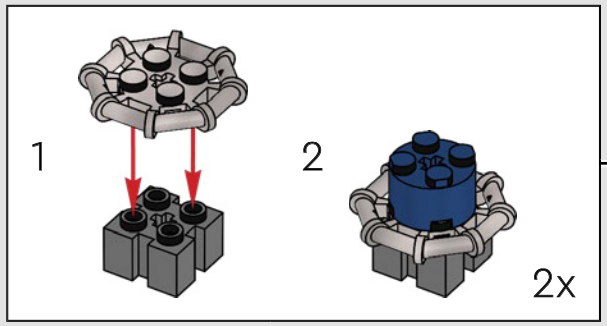

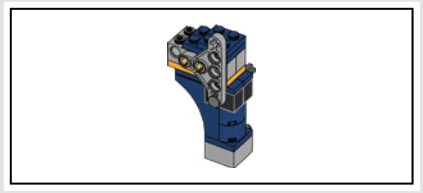

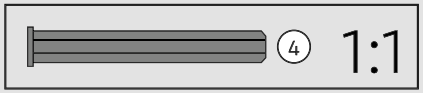

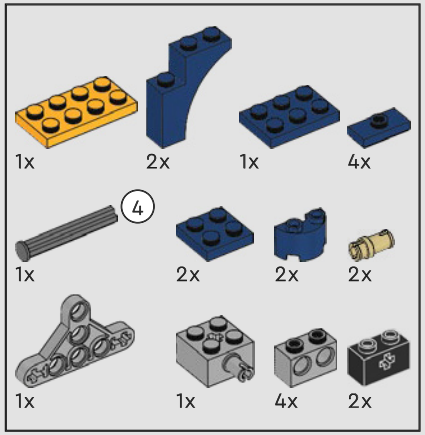

139

1

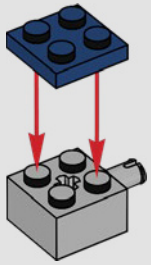

2

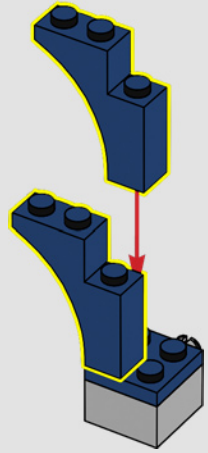

3

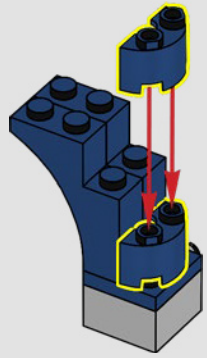

4

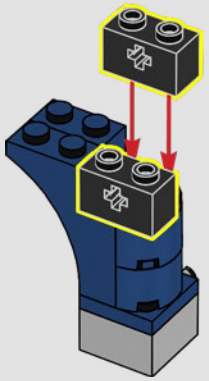

5

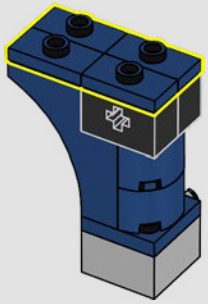

6

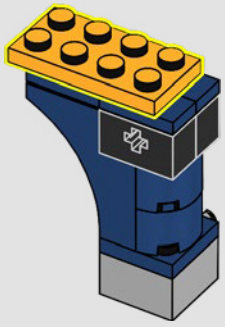

7

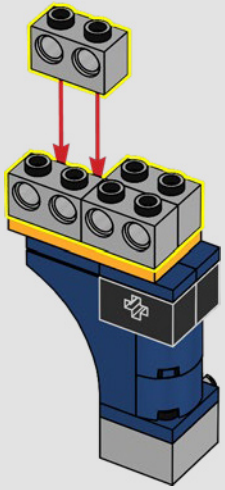

8

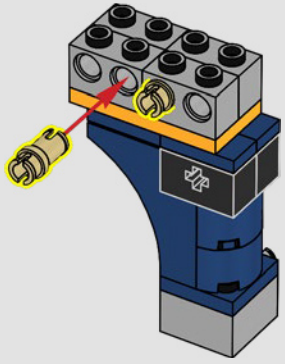

9

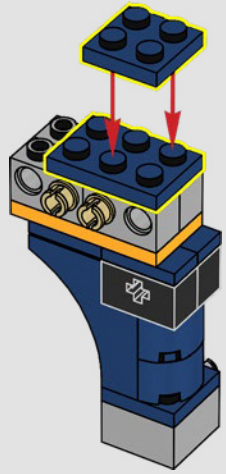

10

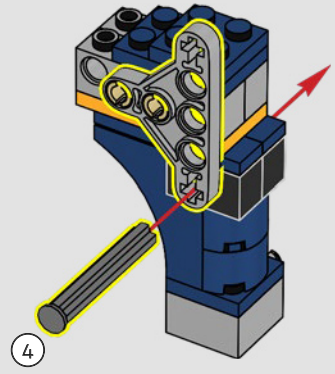

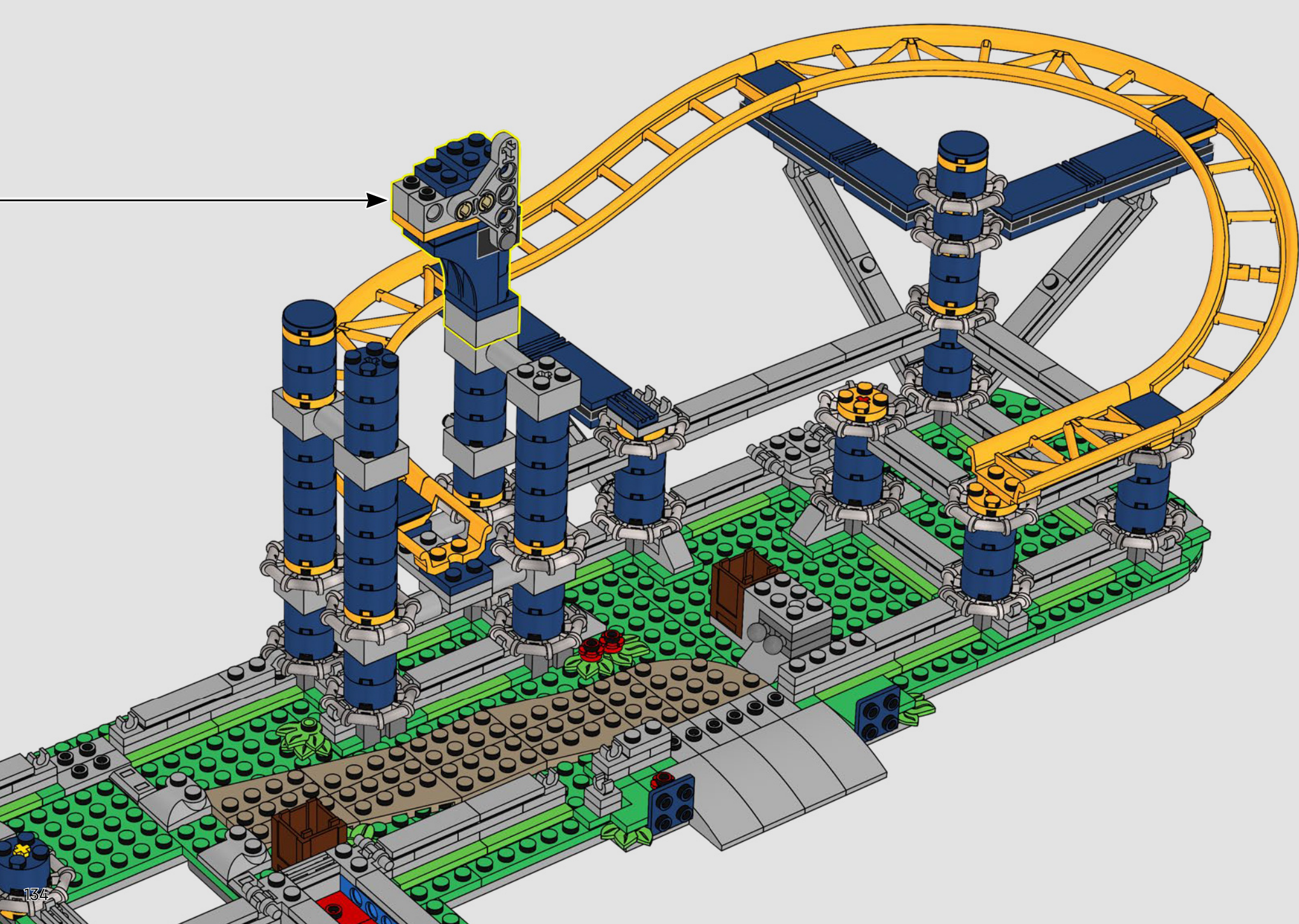

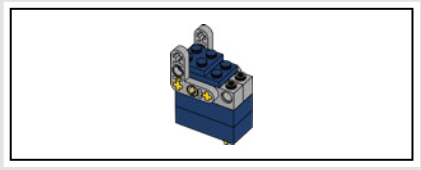

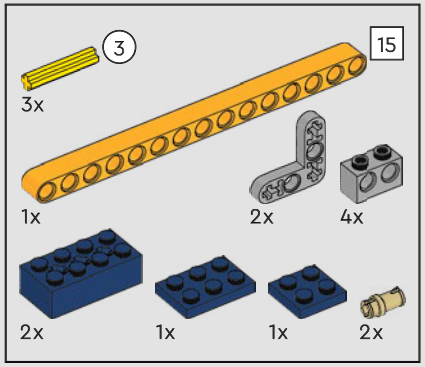

140

1

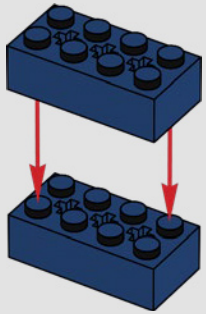

2

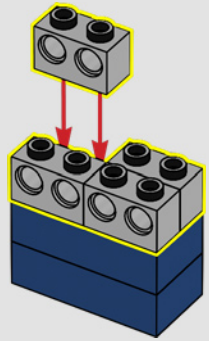

3

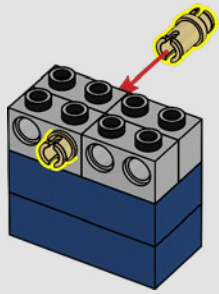

4

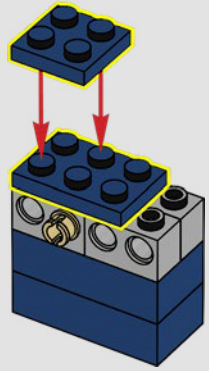

5

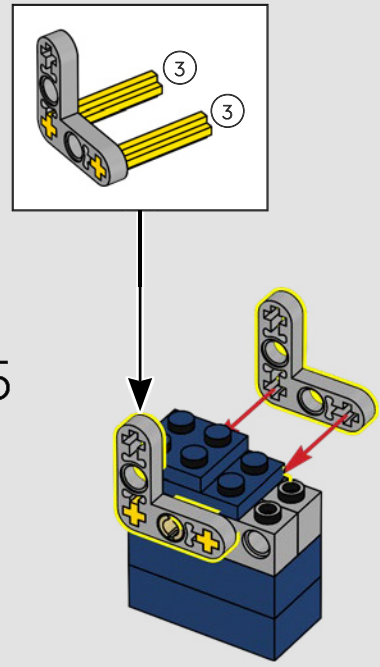

6

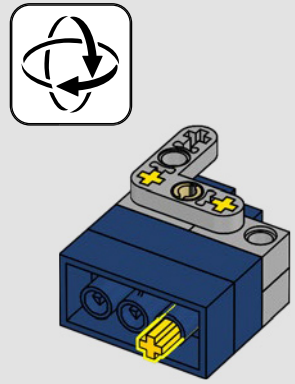

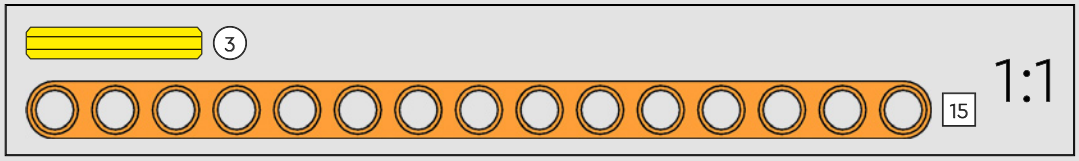

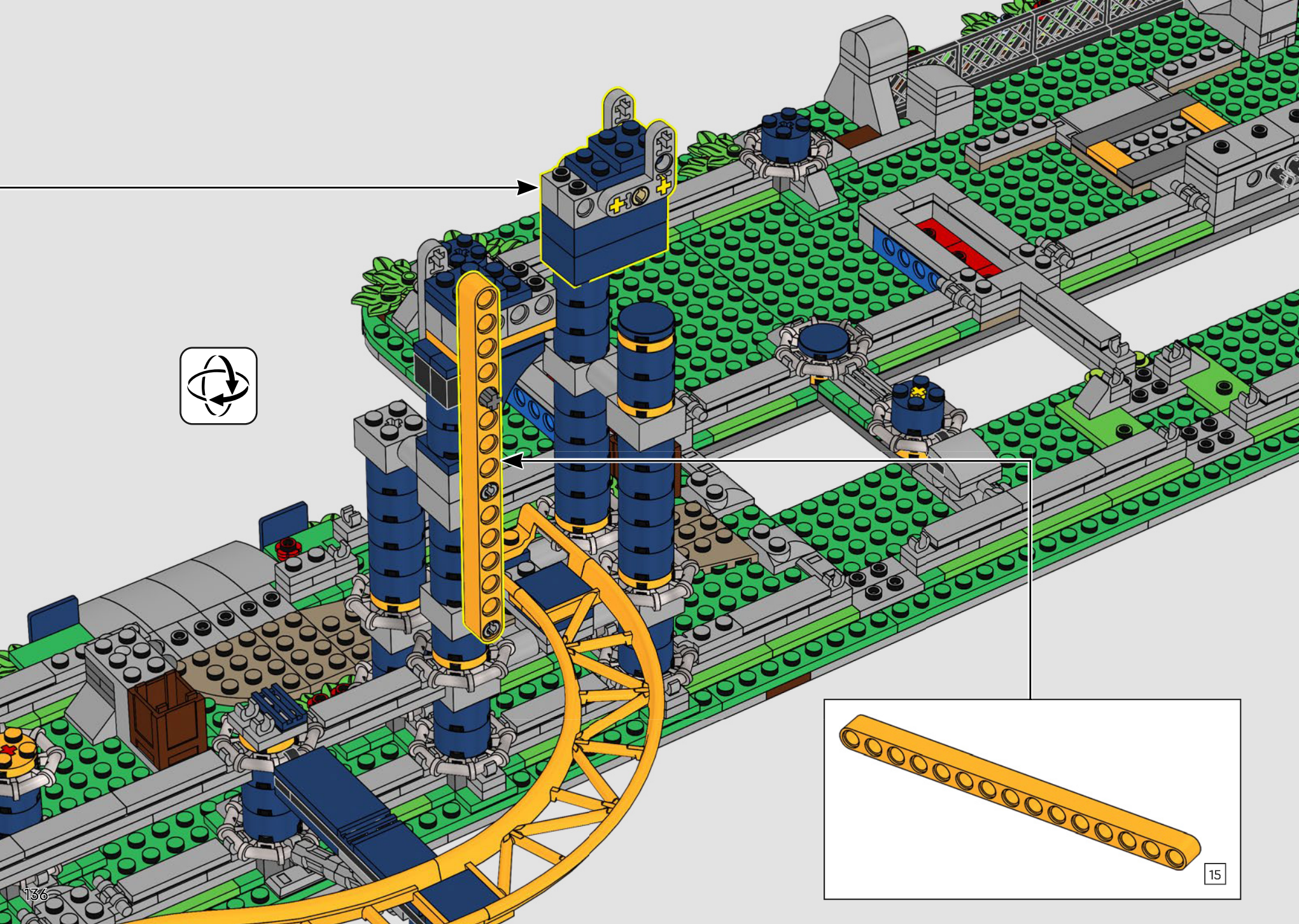
15

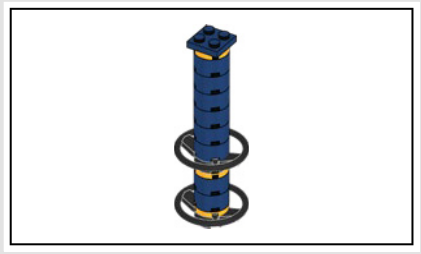

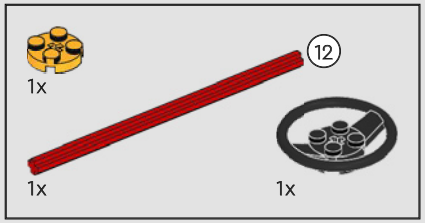

141

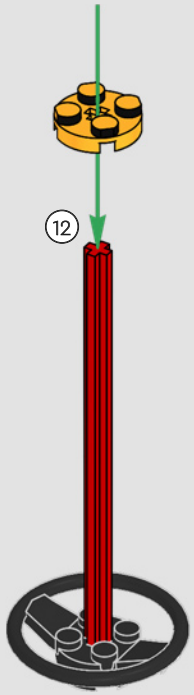

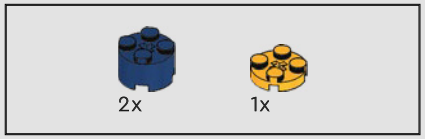

142

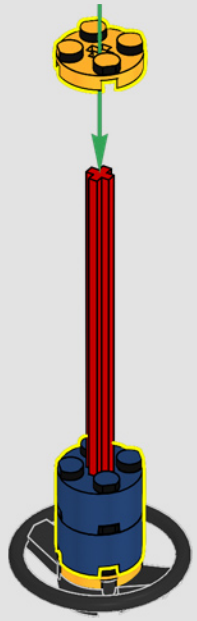

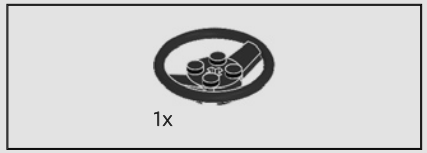

143

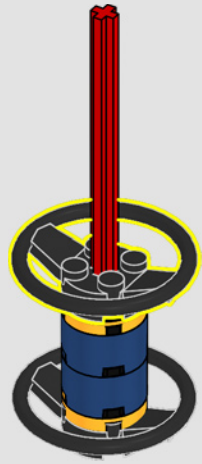

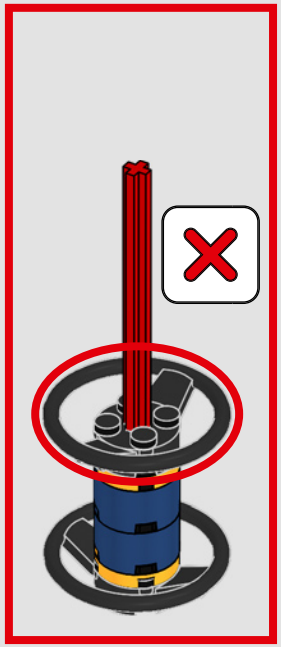

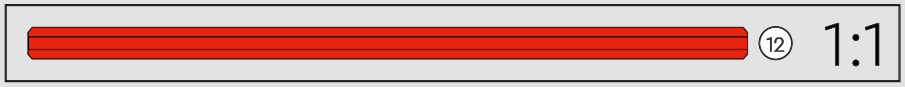

6x

144

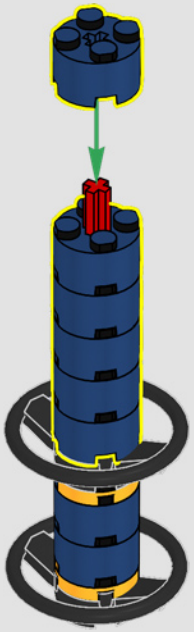

1x

1x

145

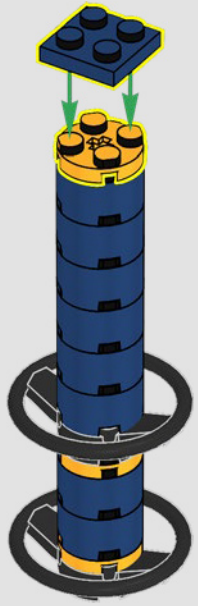

146

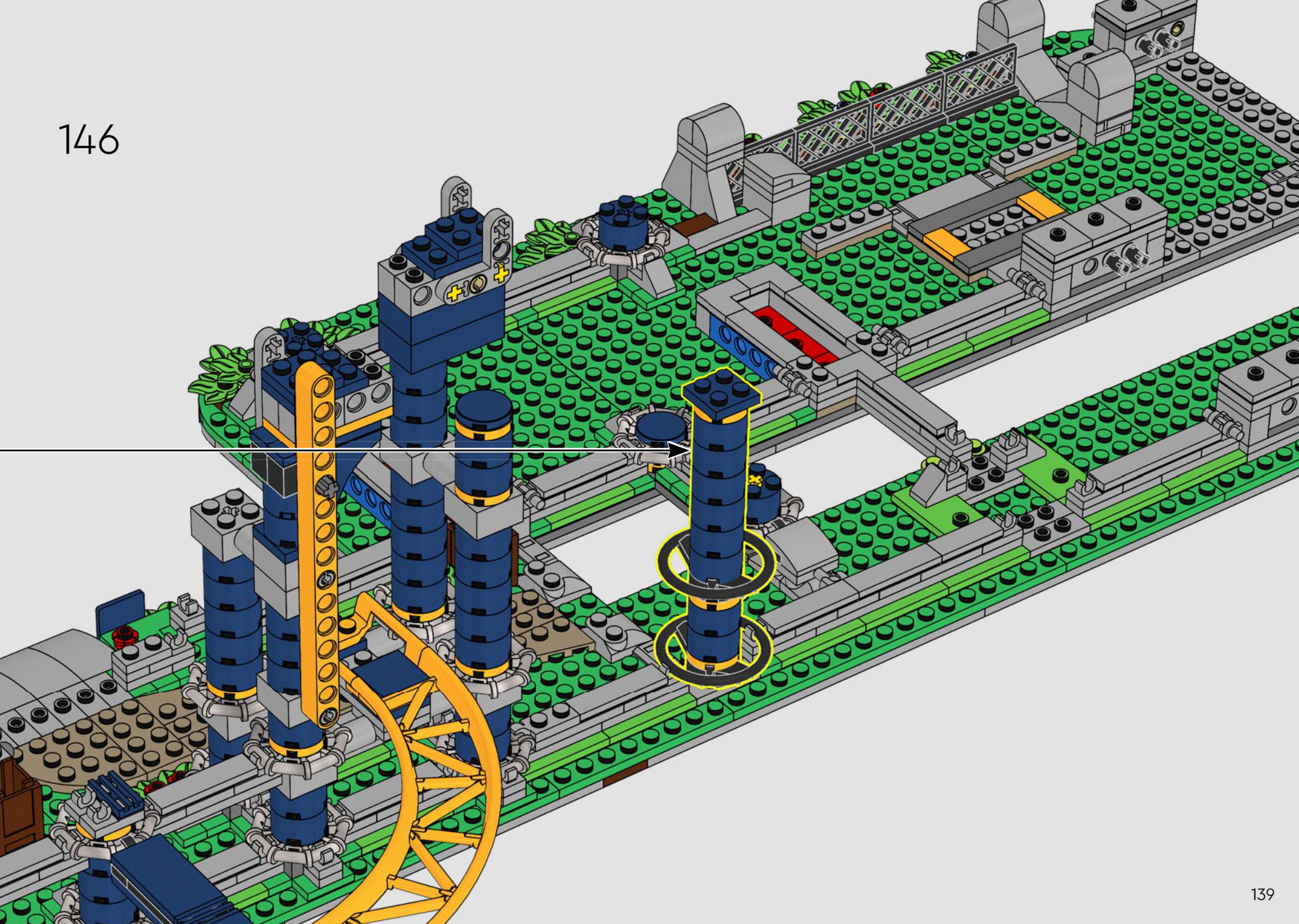

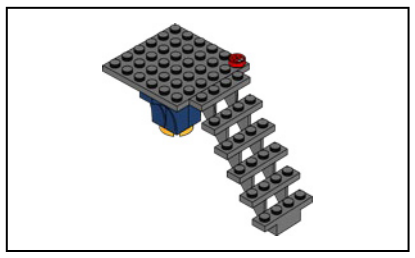

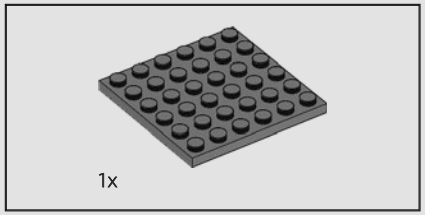

147

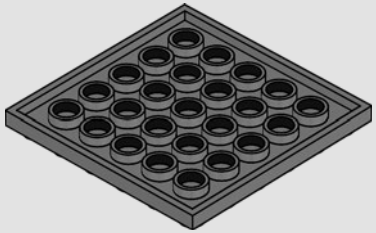

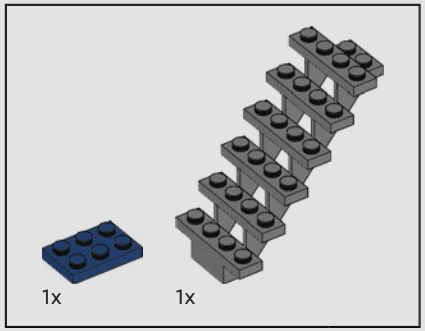

148

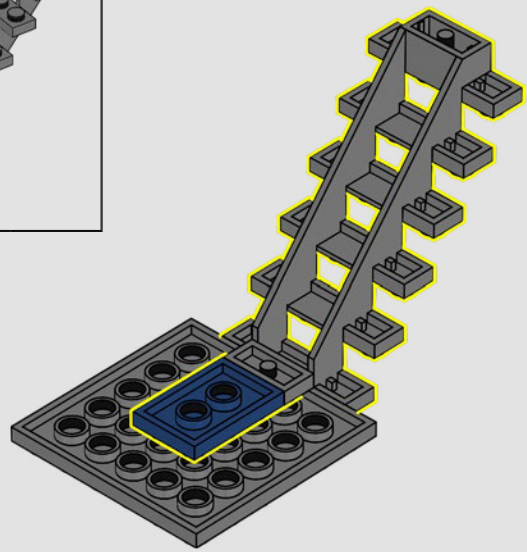

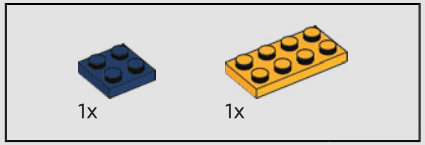

149

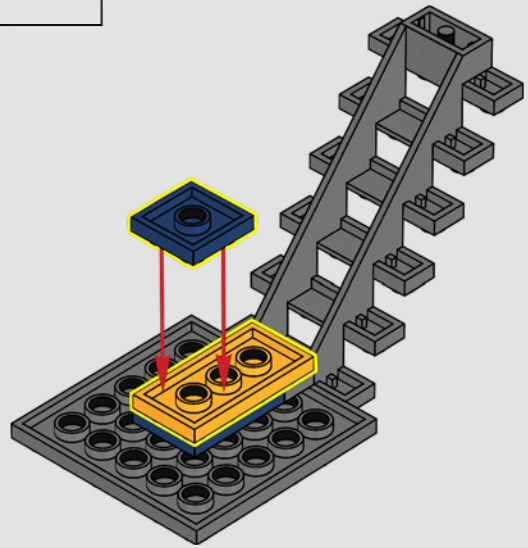

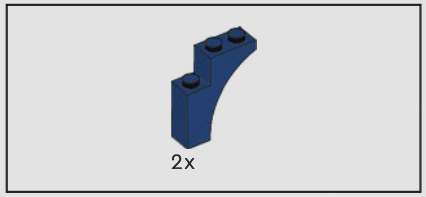

150

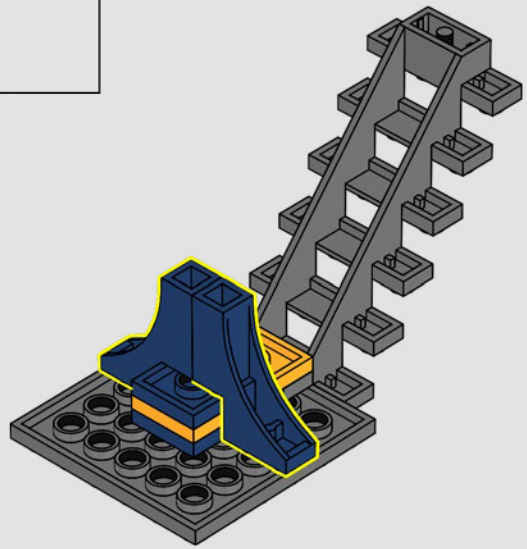

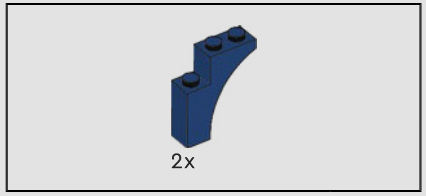

151

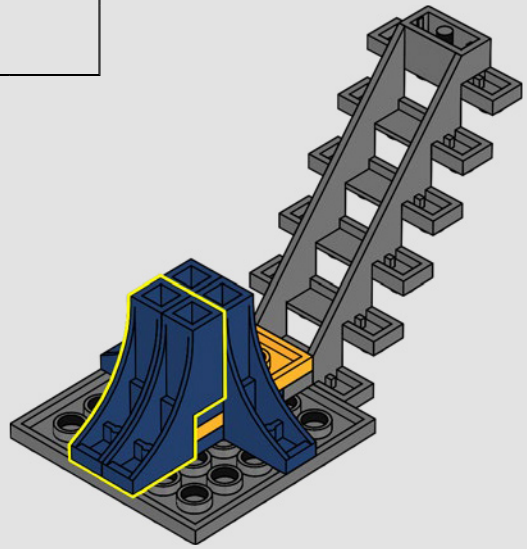

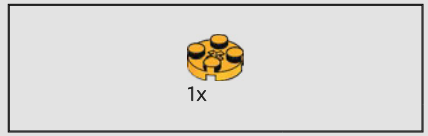

152

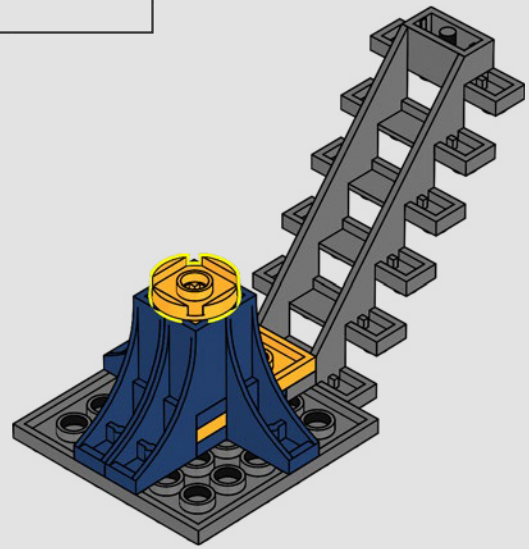

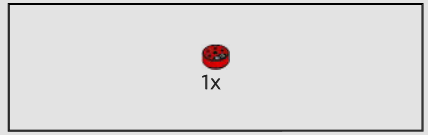

153

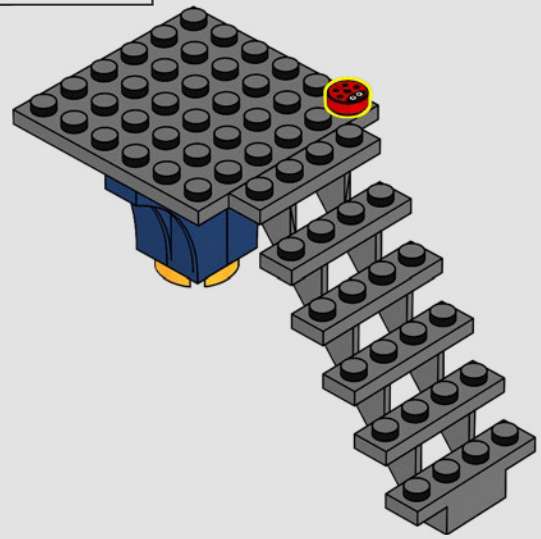

154

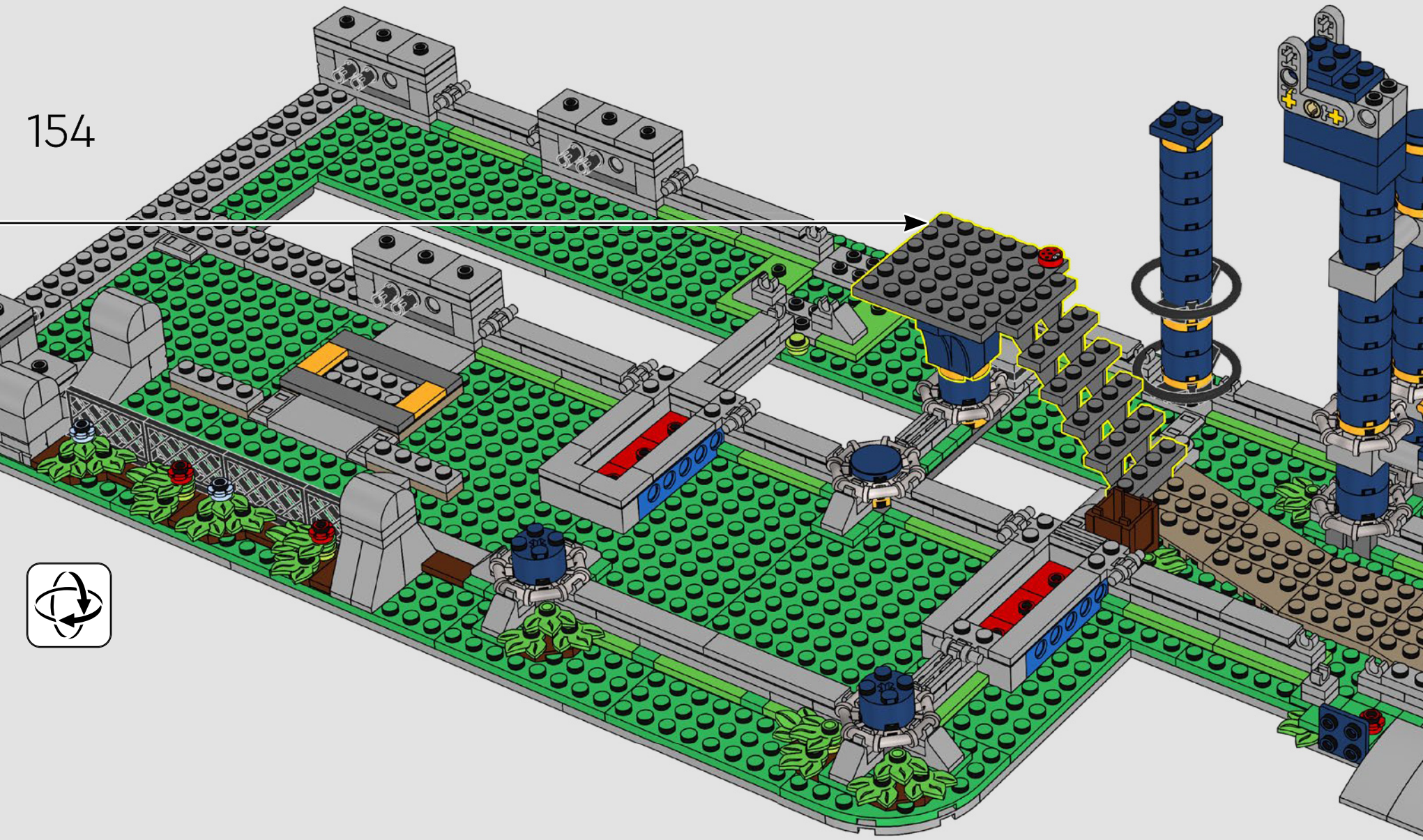

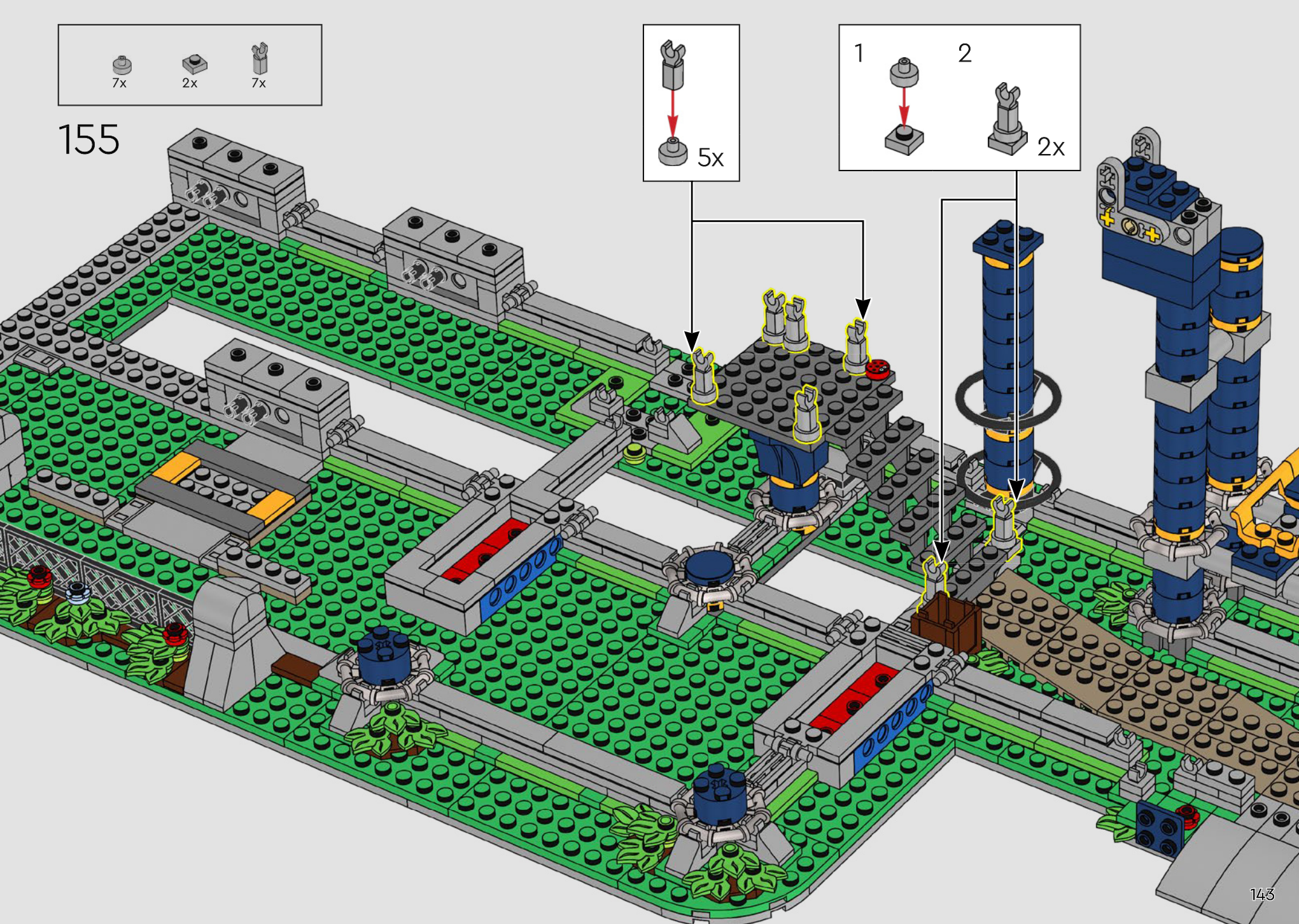
7x
2x
7x
155
5x
1
2
2x

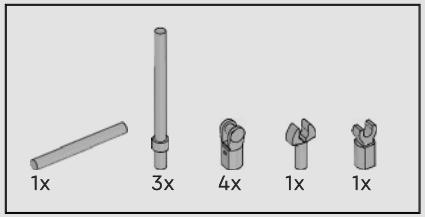

156

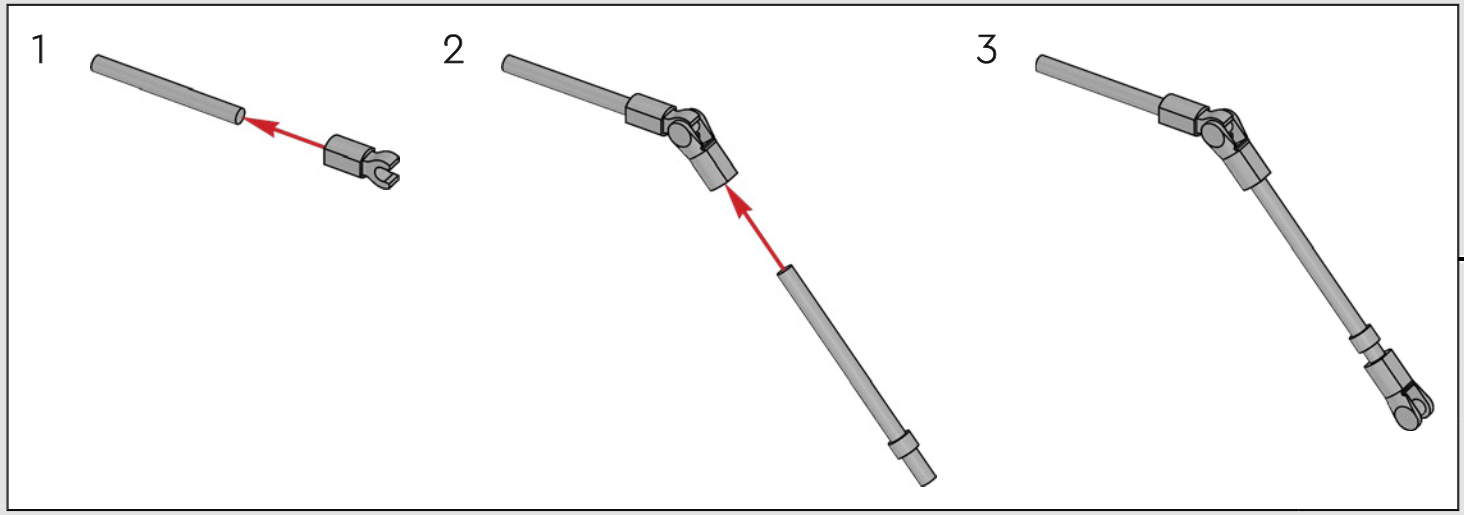

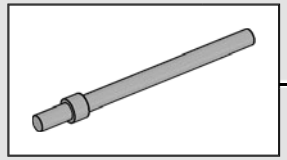

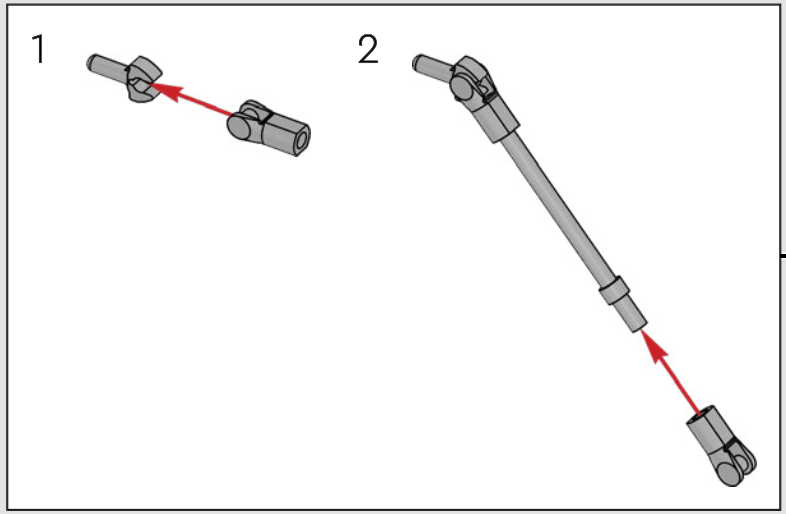

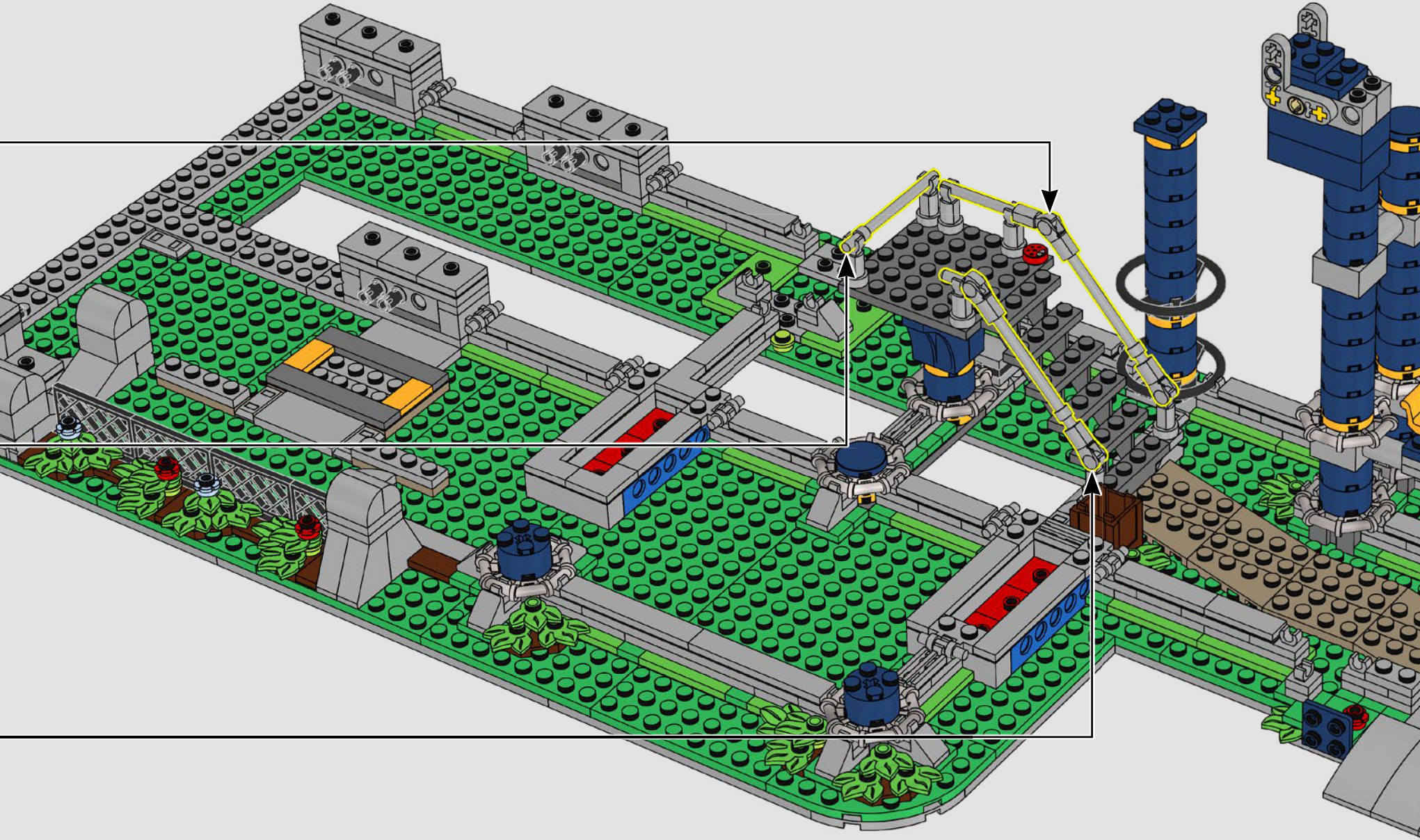

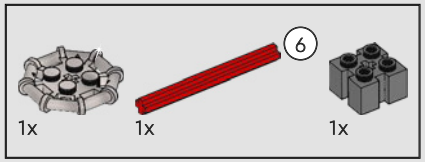

157

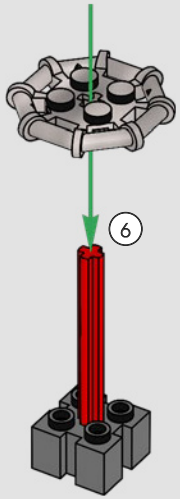

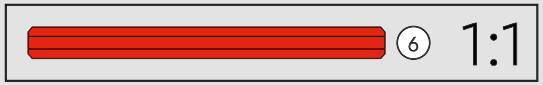

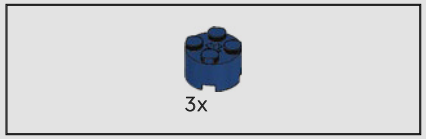

158

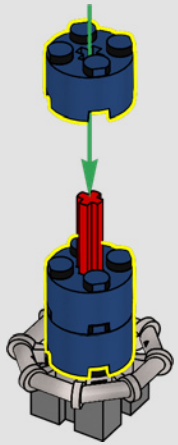

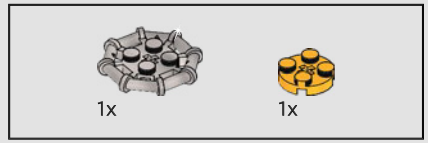

159

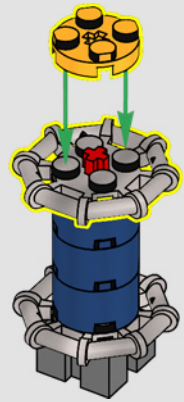

160

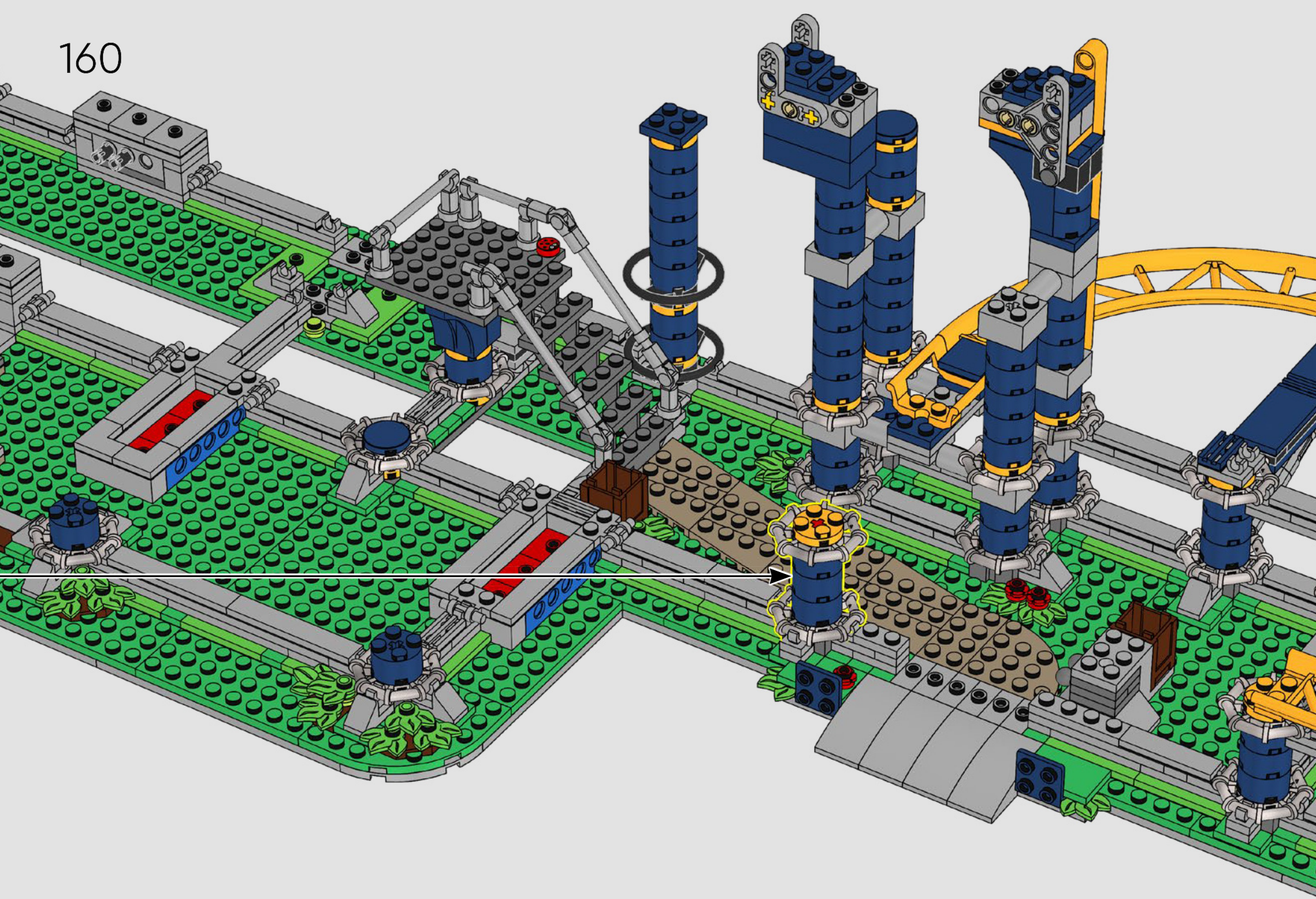

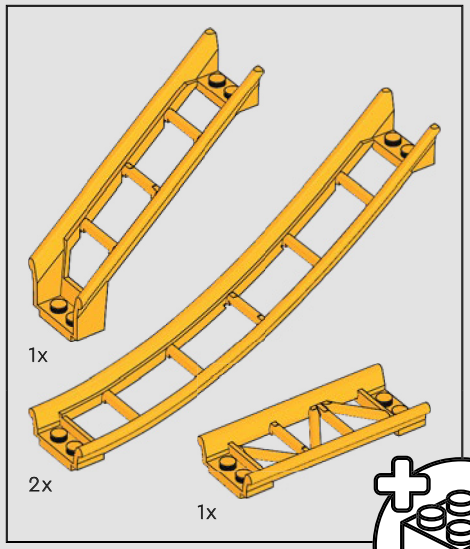

161

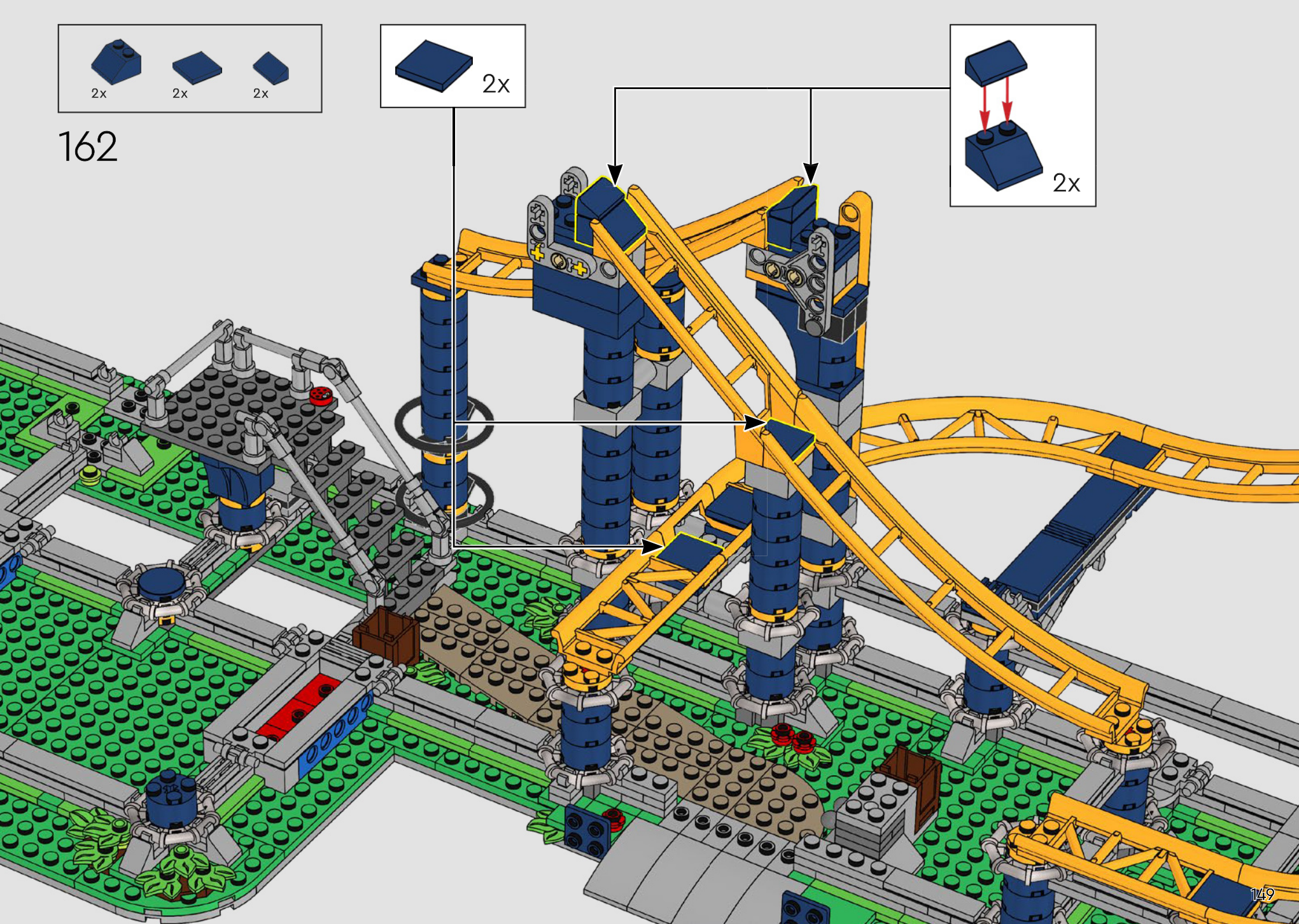
2x
2x
2x
2x
2x
162

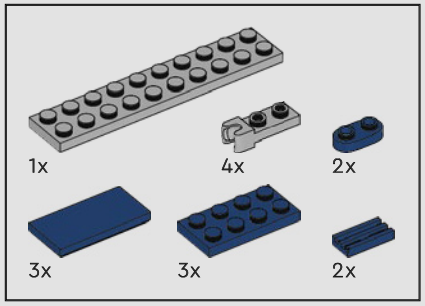

163

1

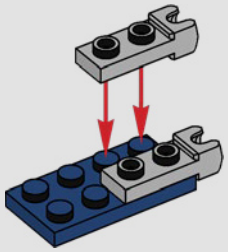

2

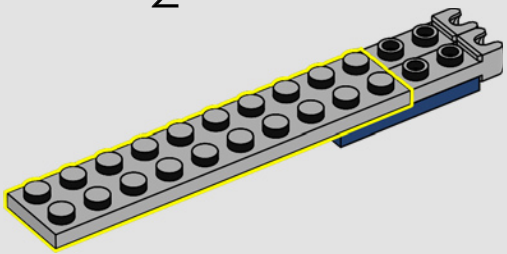

3

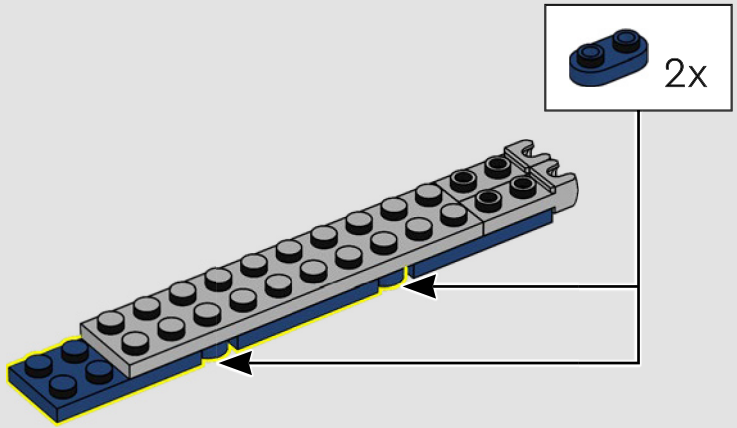

4

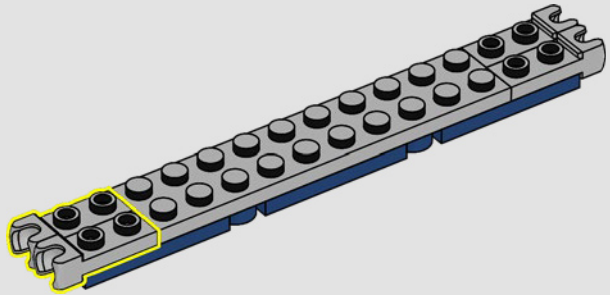

5

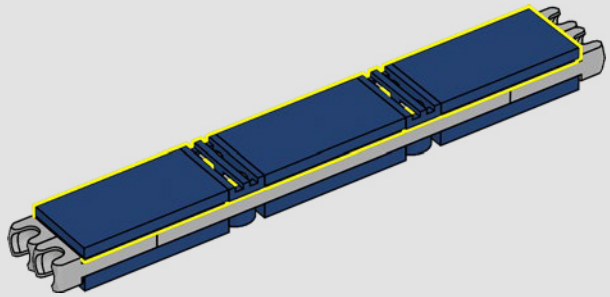

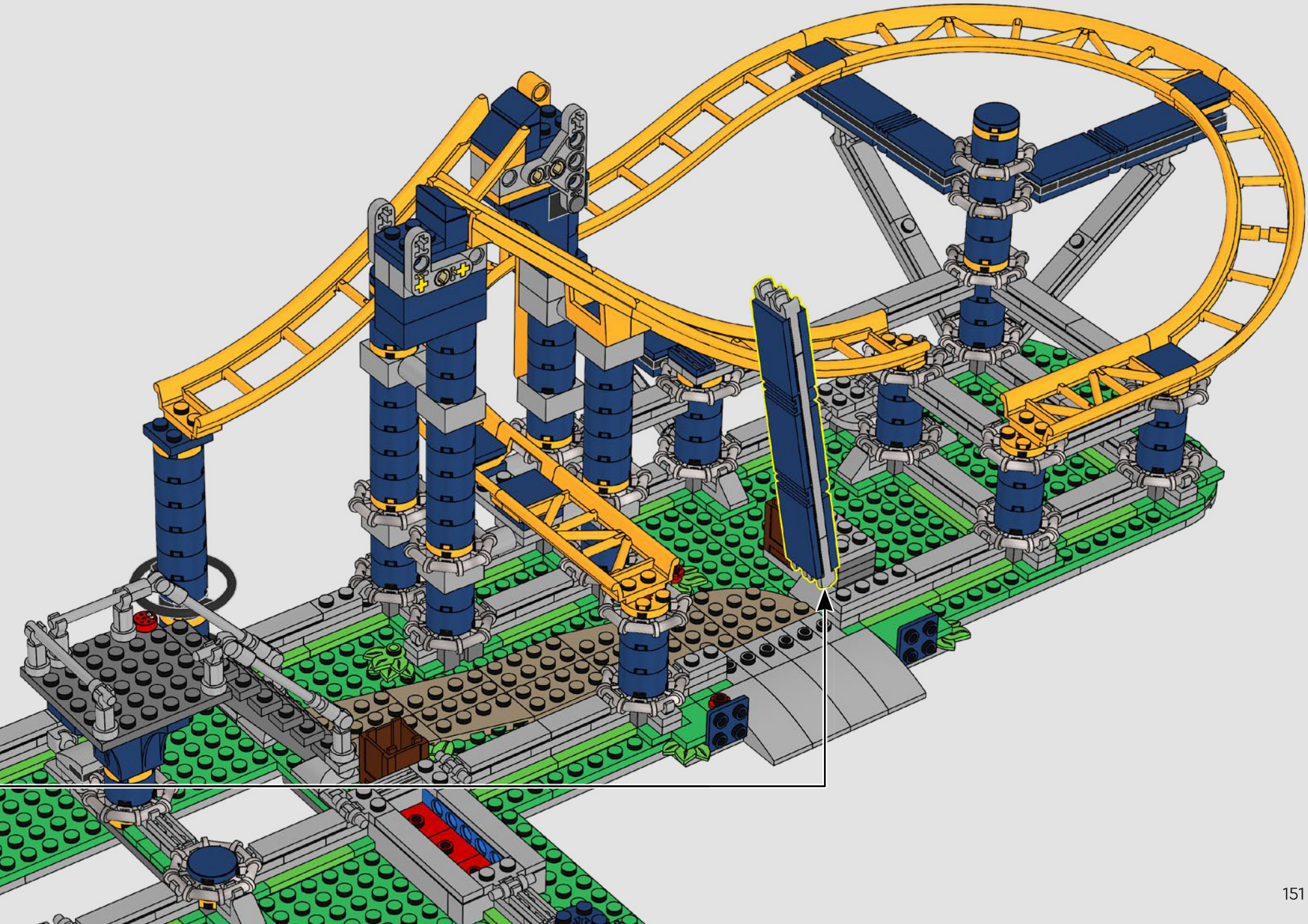

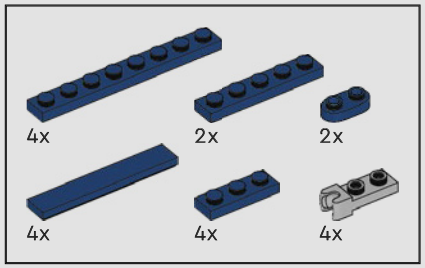

164

1

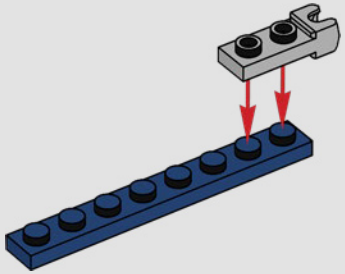

2

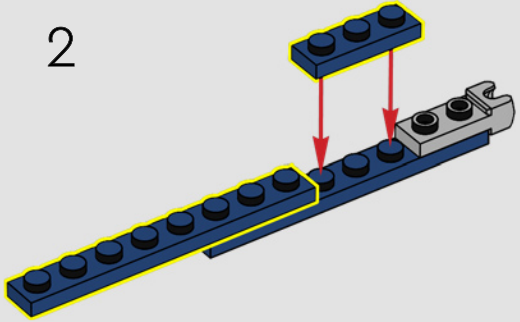

3

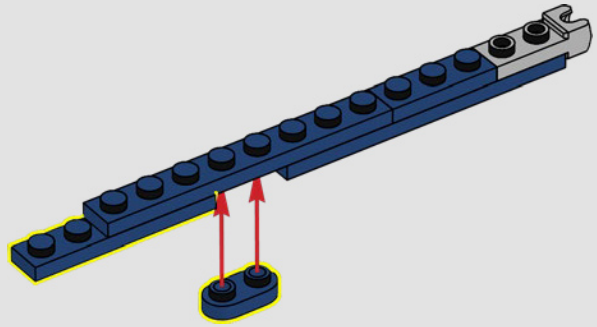

4

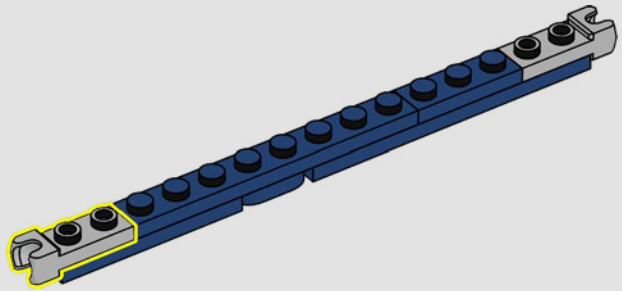

5

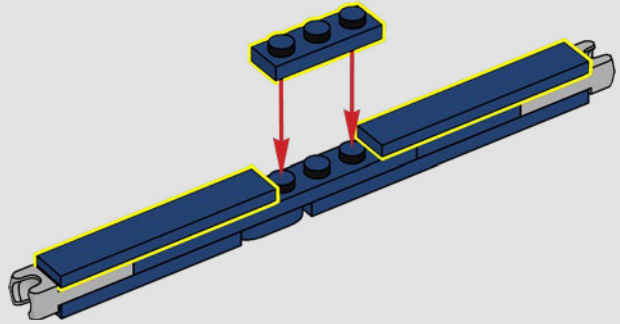

2x

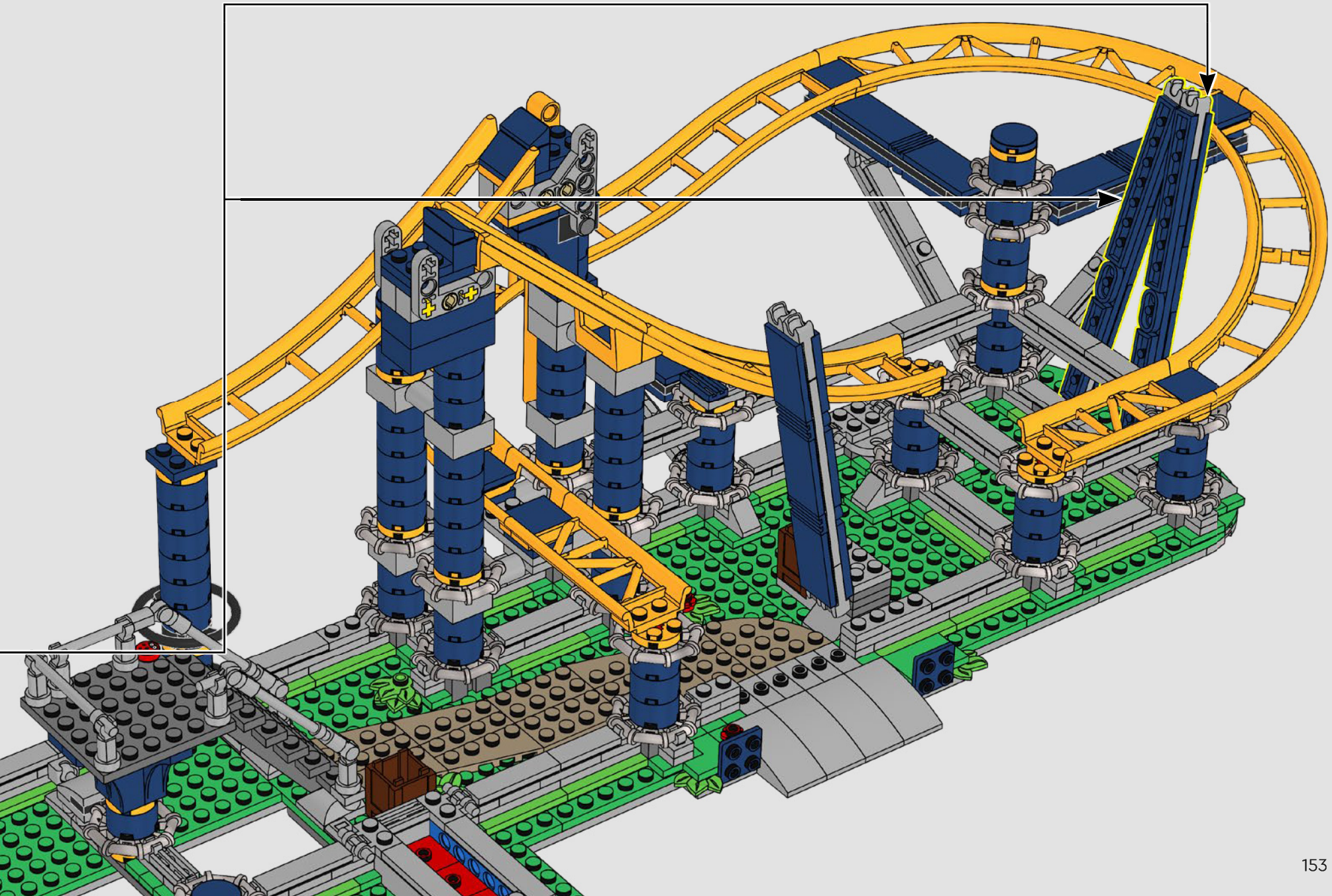

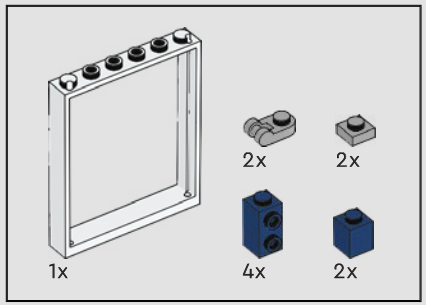

165

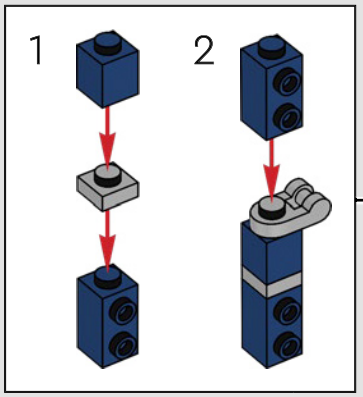

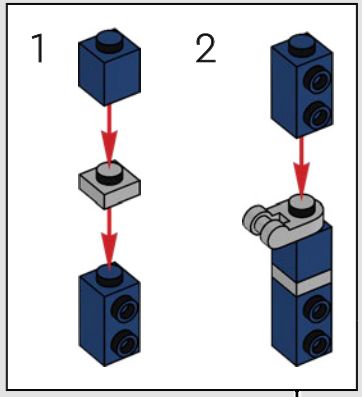

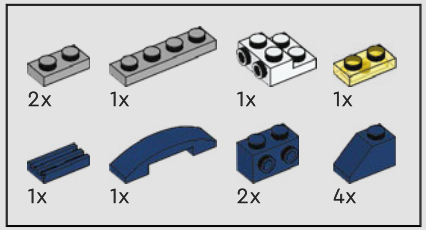

166

1

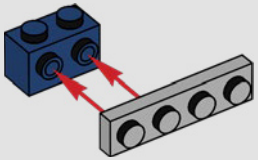

2

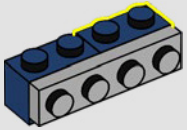

3

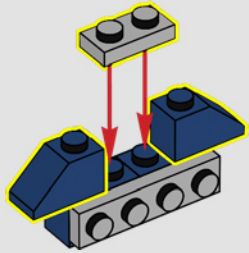

4

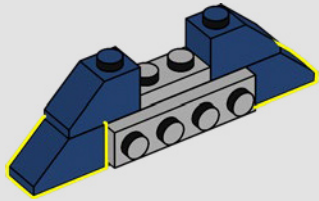

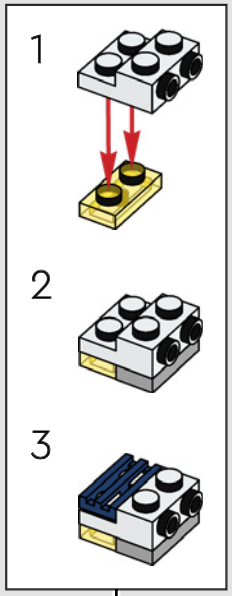

5

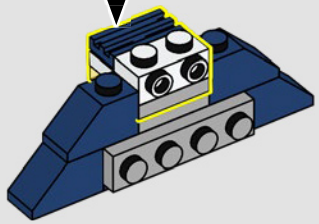

6

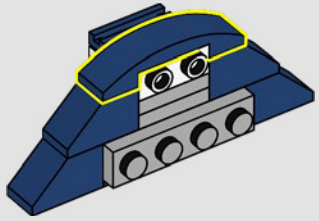

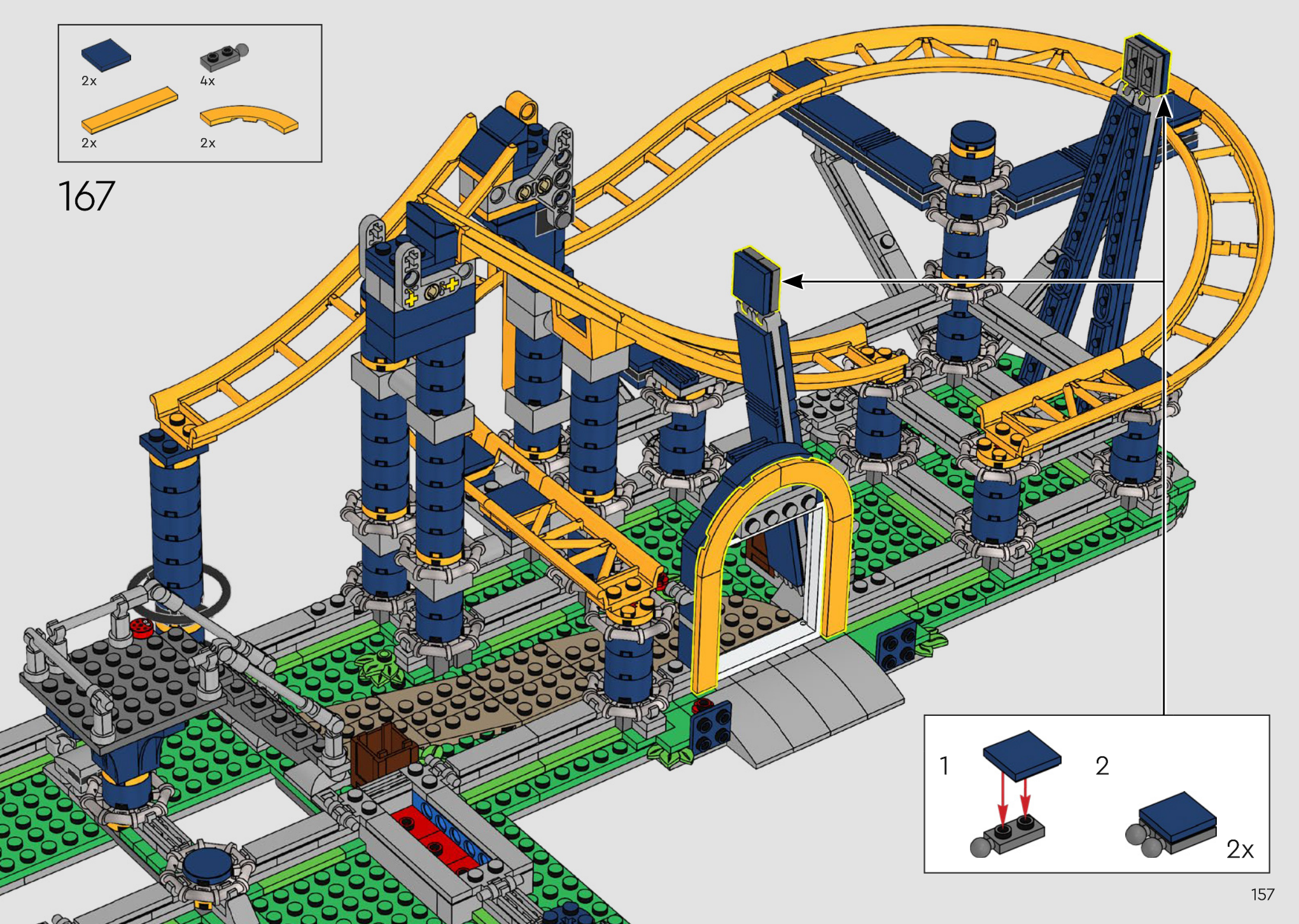
2x
4x
2x
2x
167
1
2
2x

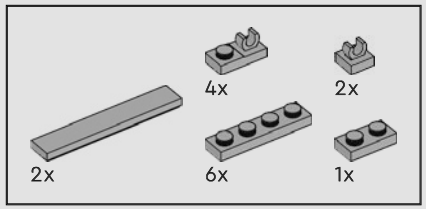

168

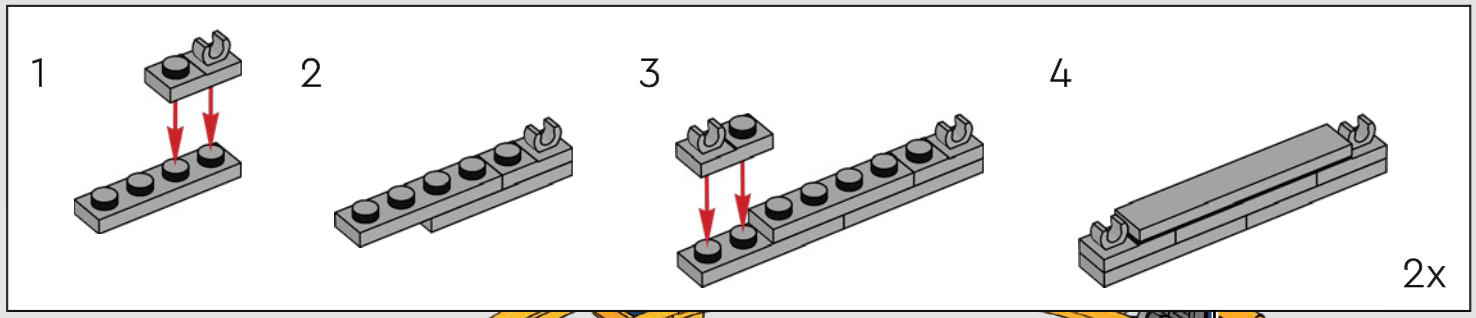

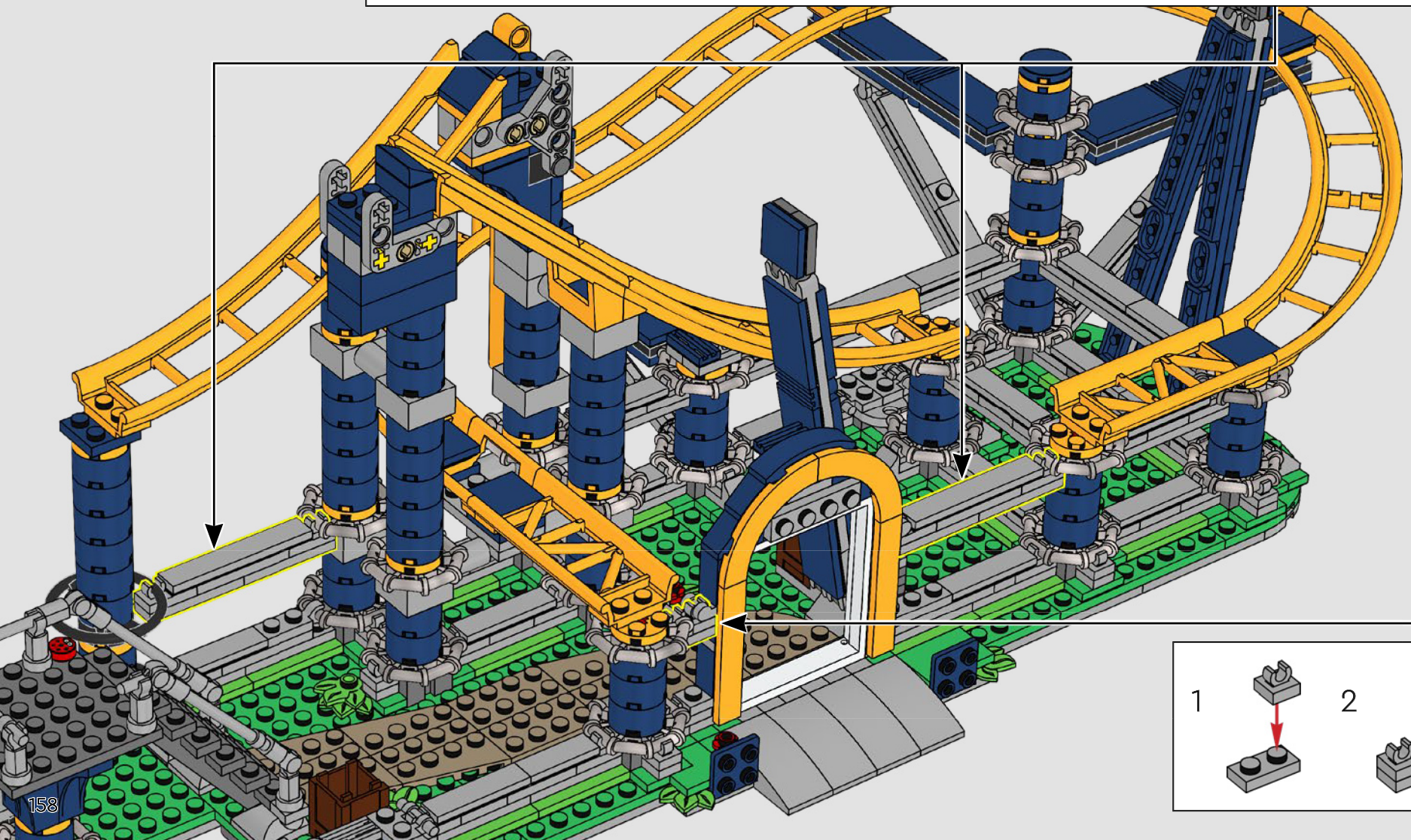

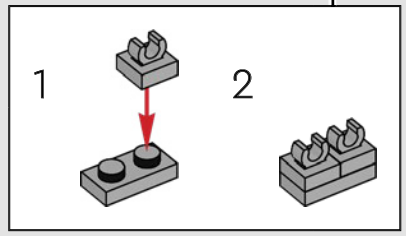

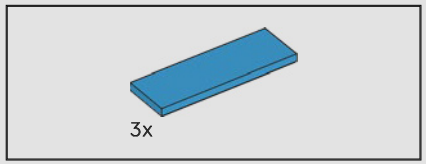

169

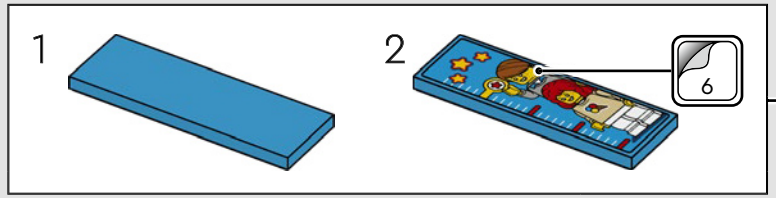

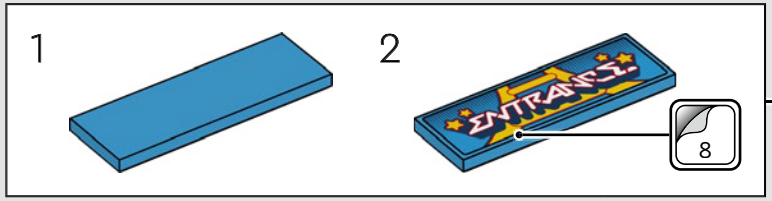

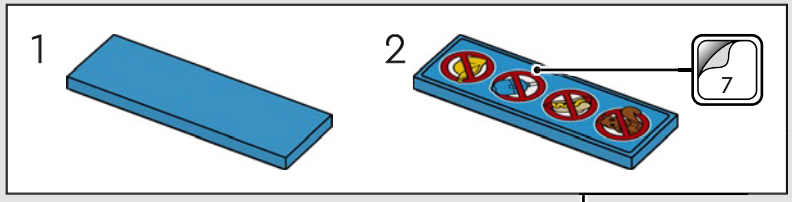

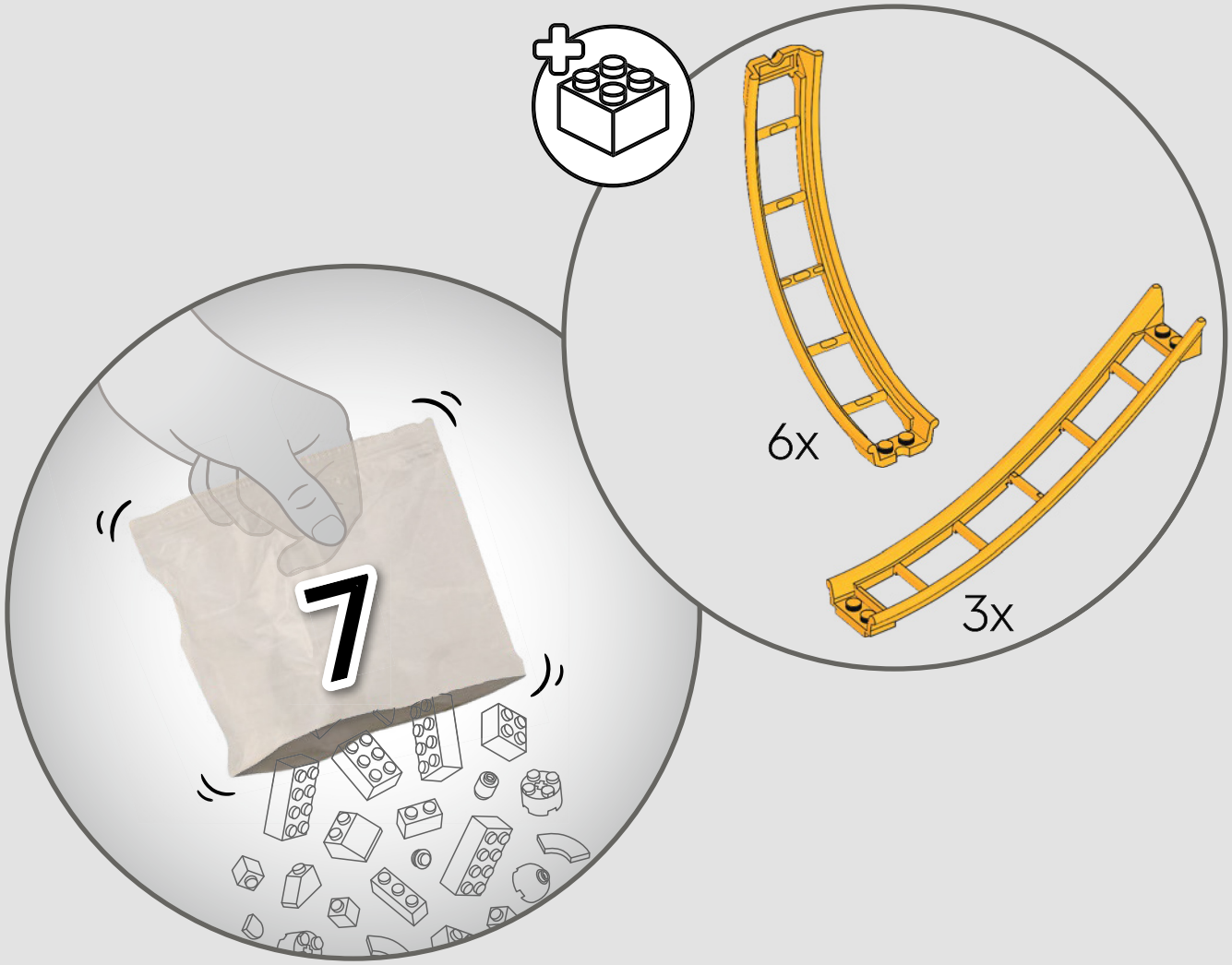
7
6x
3x

170

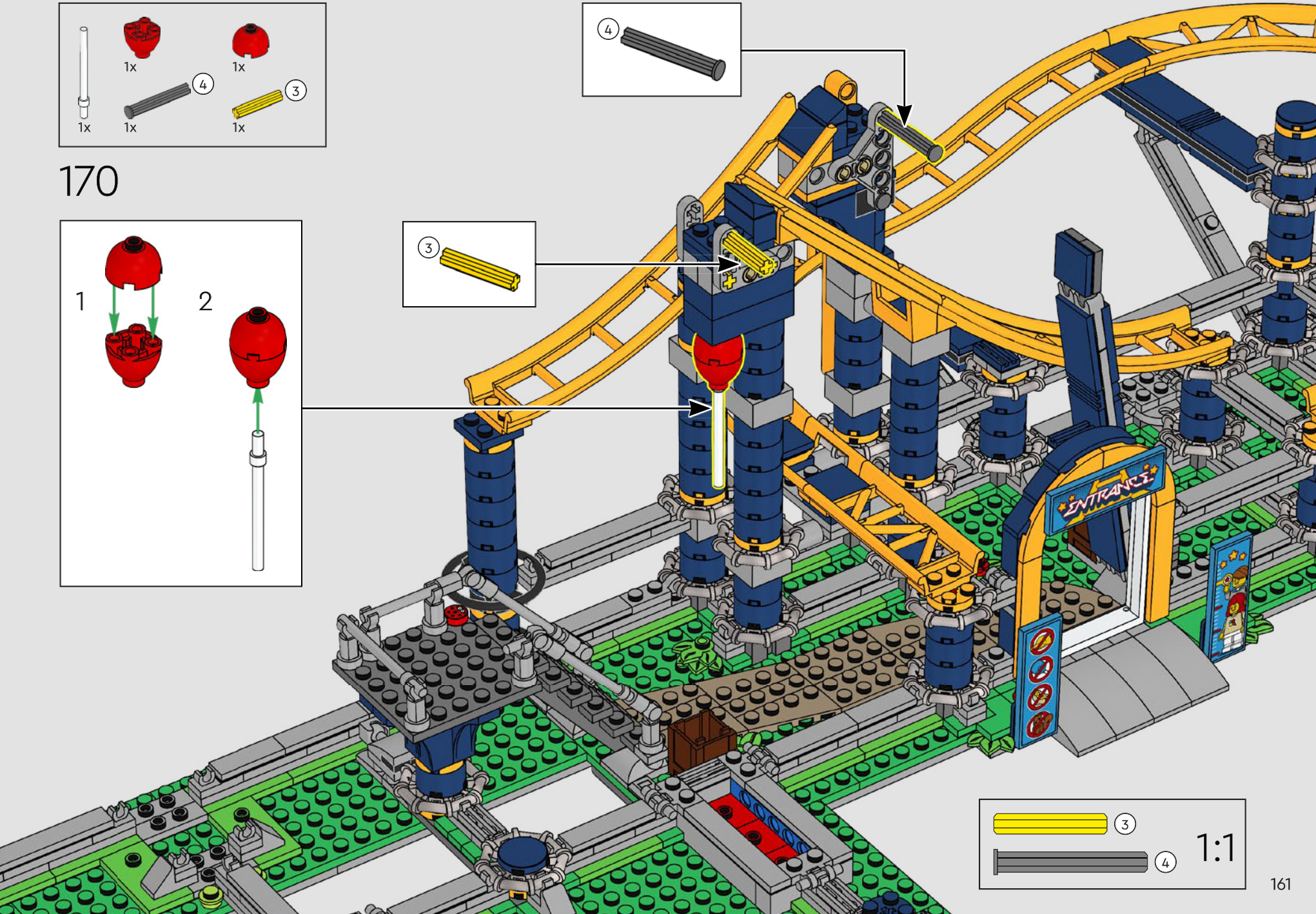

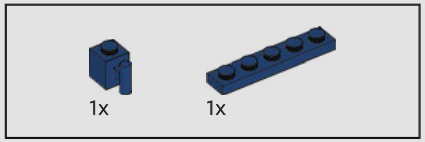

171

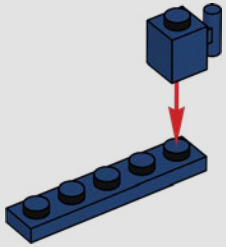

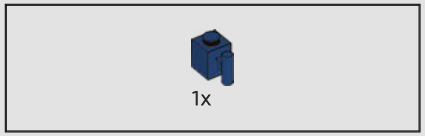

172

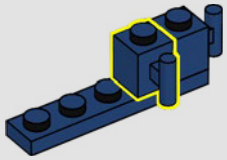

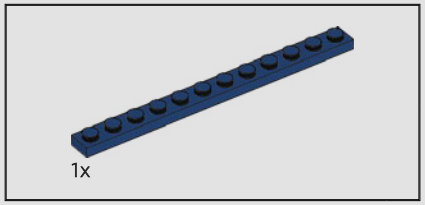

173

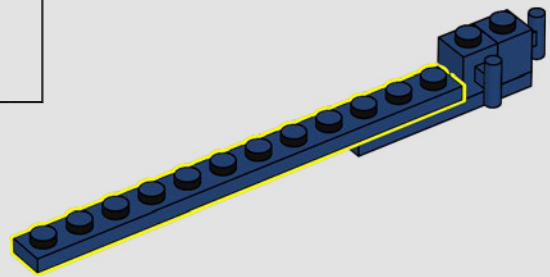

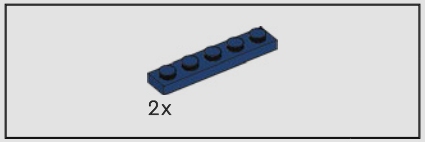

174

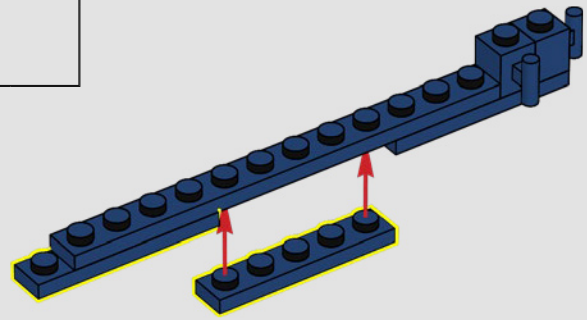

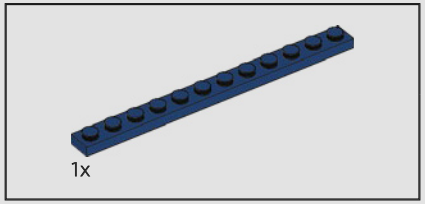

175

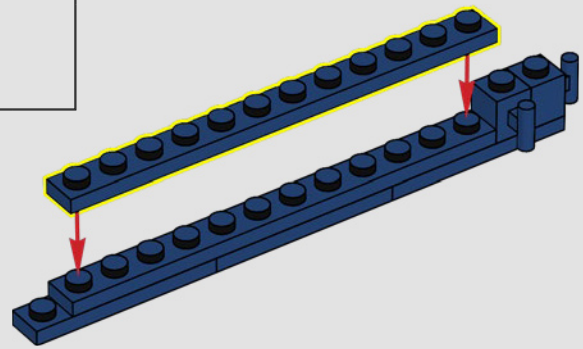

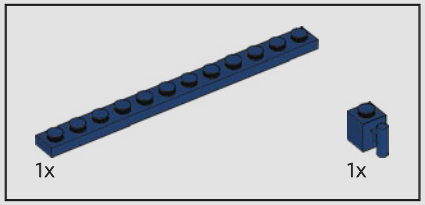

176

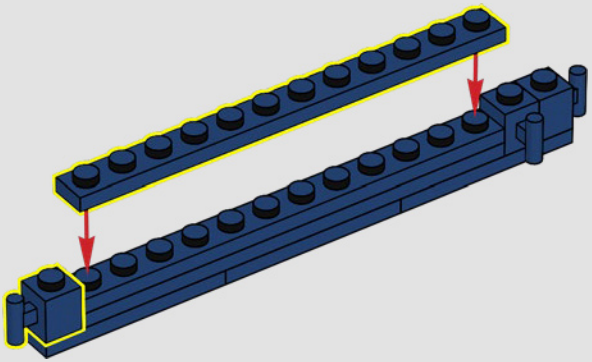

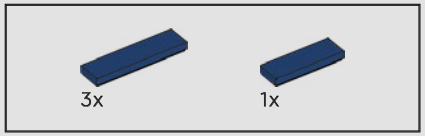

177

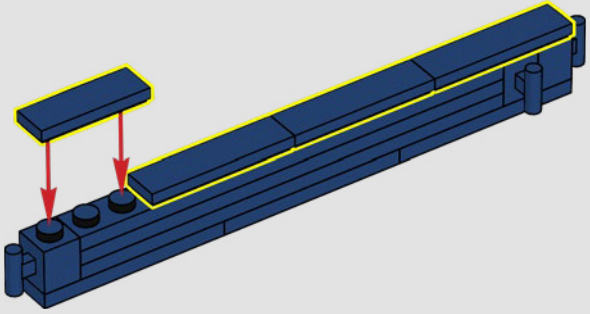

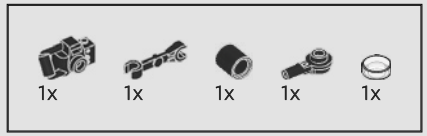

178

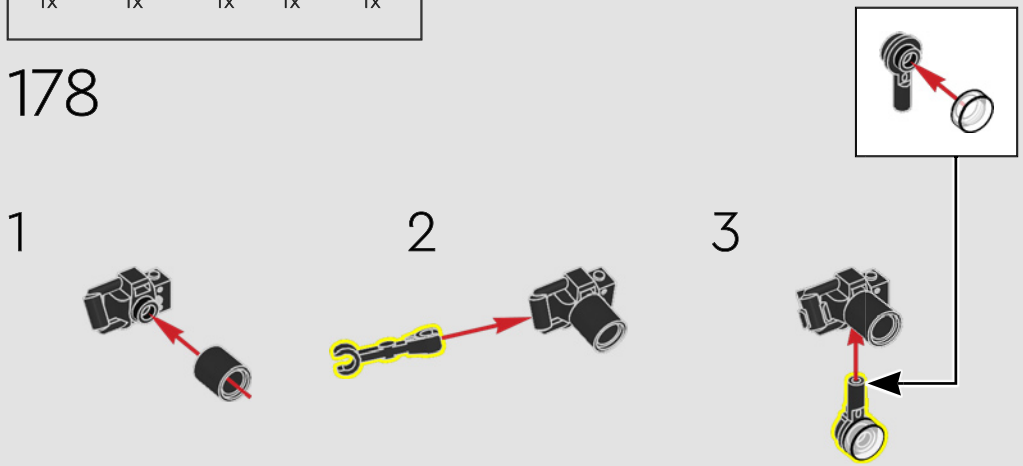

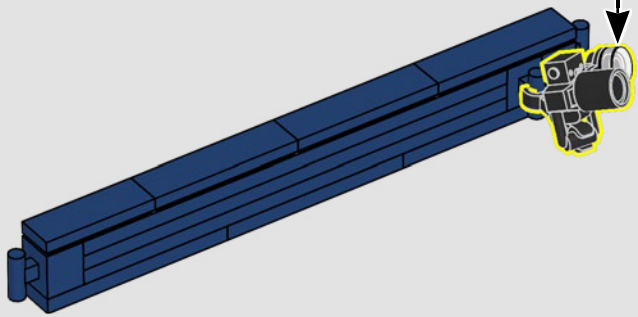

179

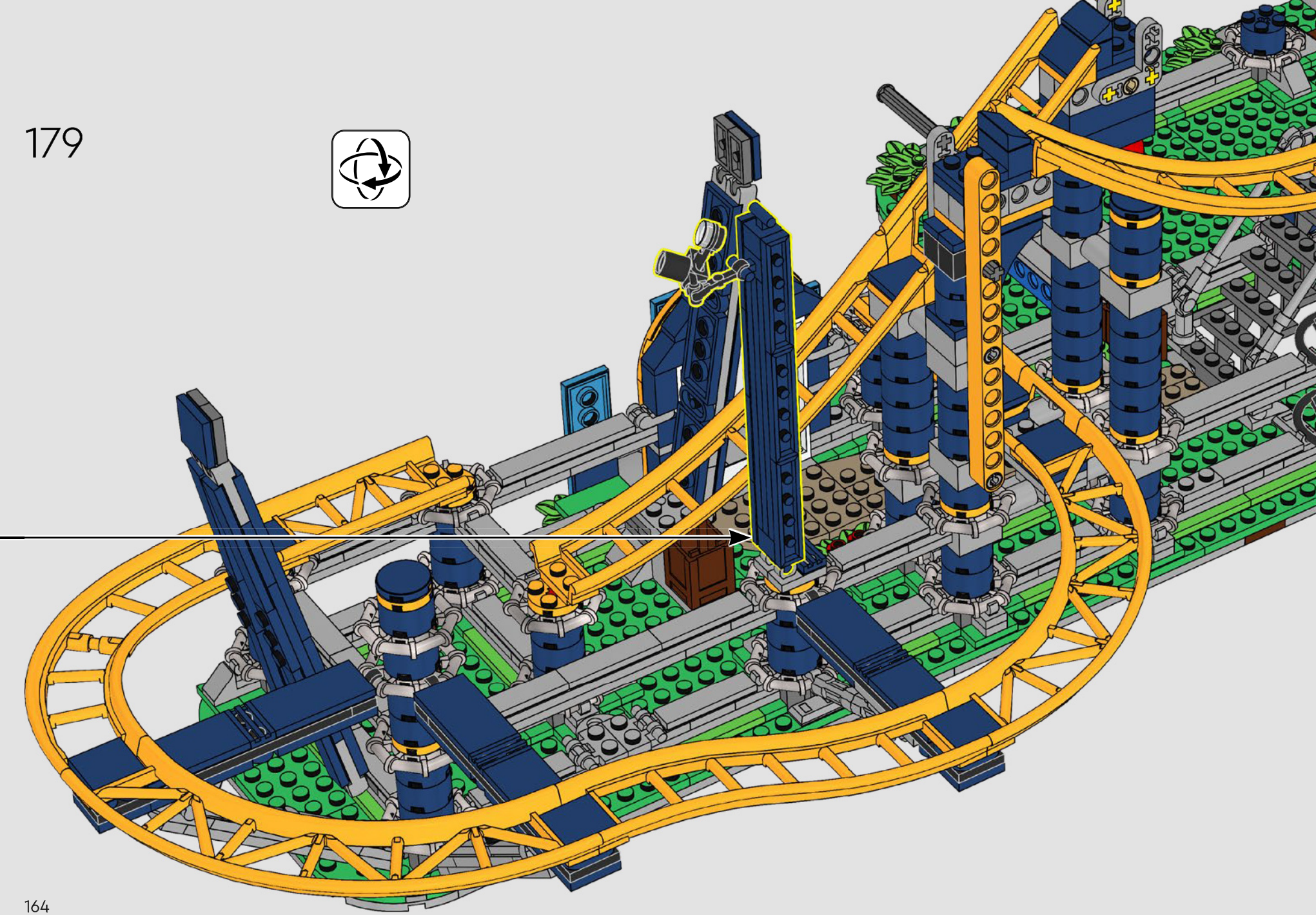

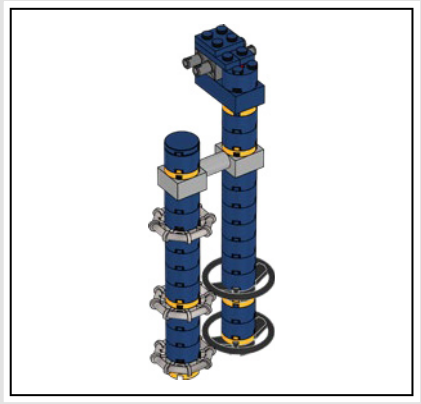

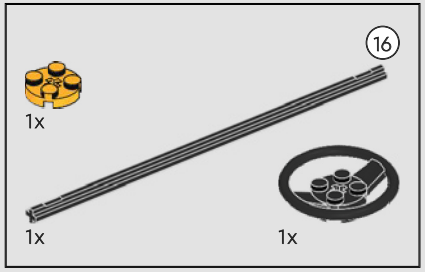

180

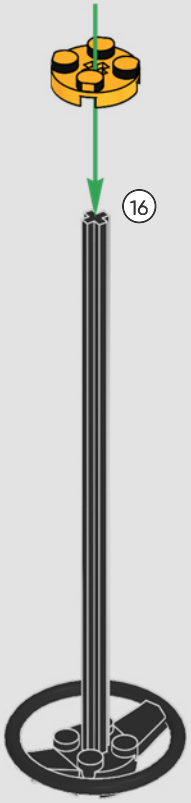

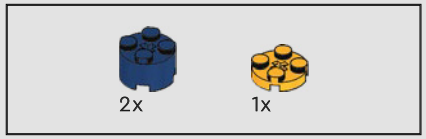

181

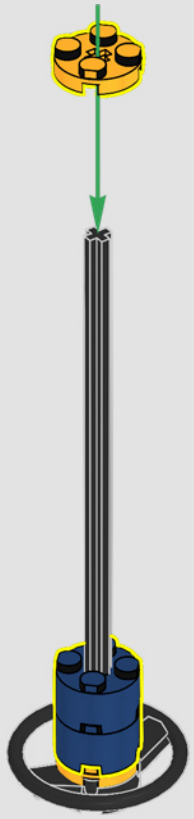

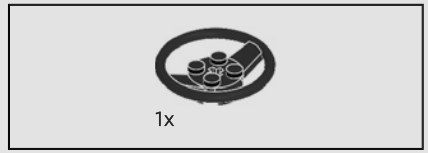

182

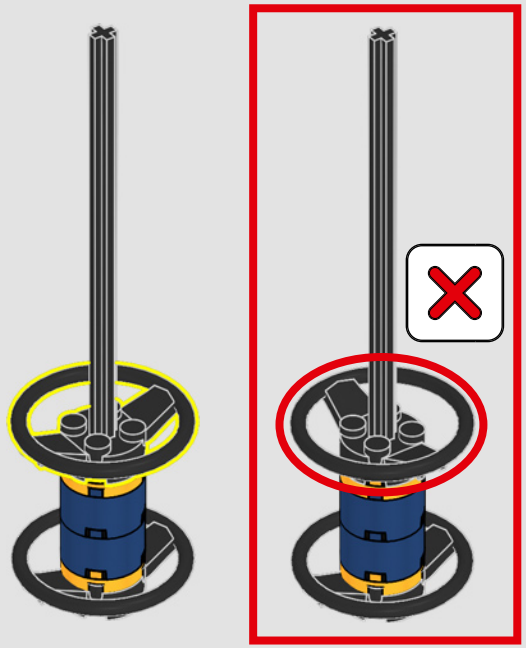

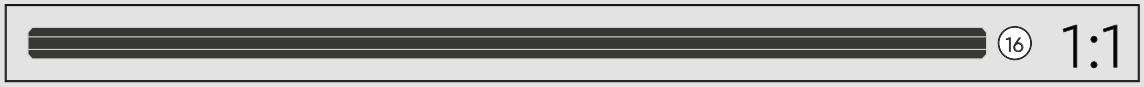

7x

183

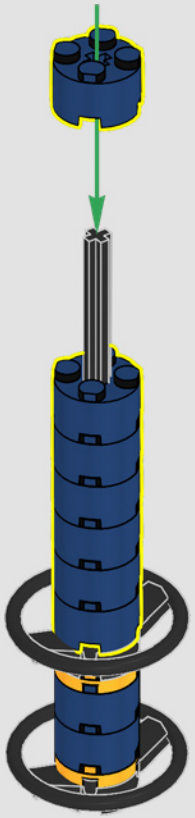

1x

184

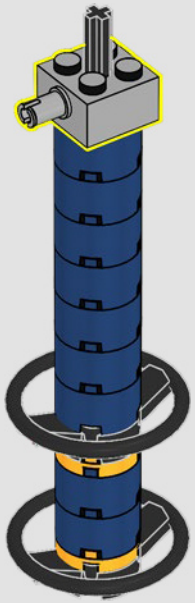

1x

1x

185

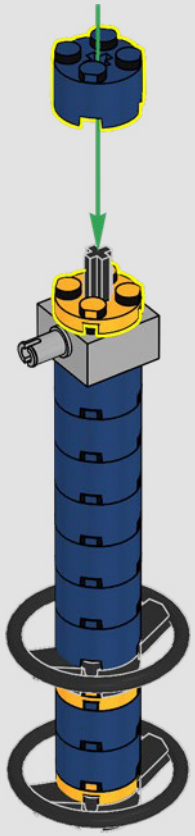

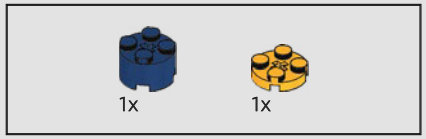

186

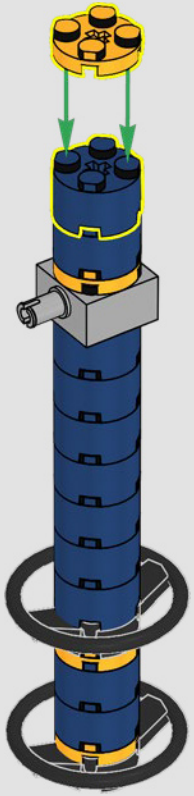

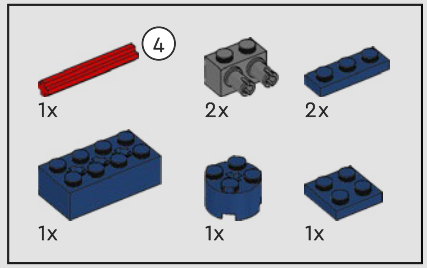

187

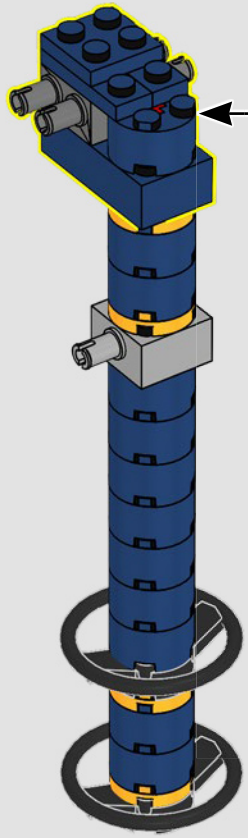

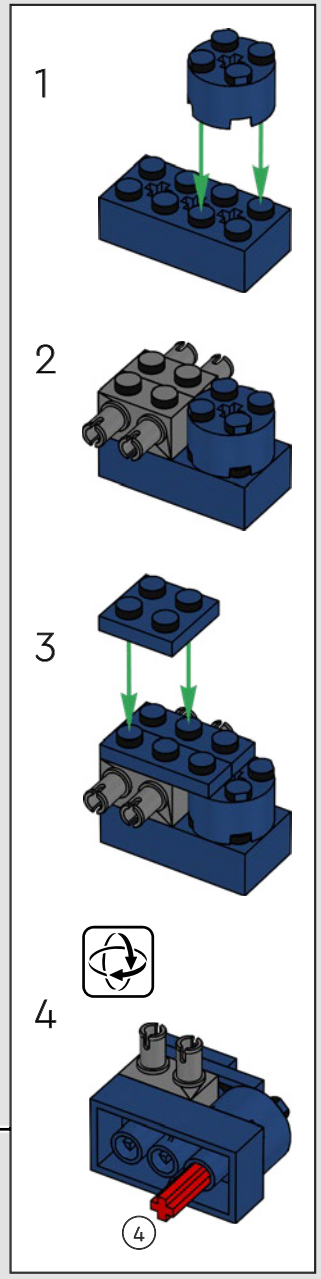

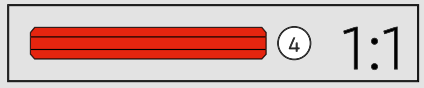

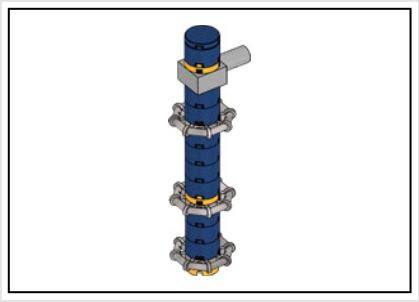

188

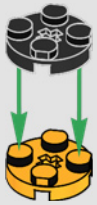

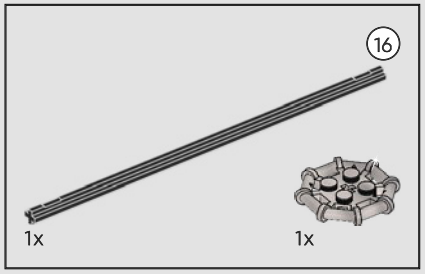

189

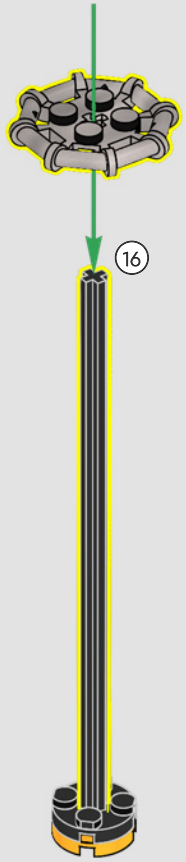

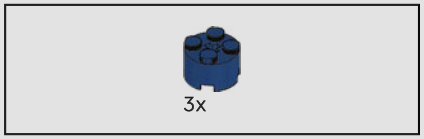

190

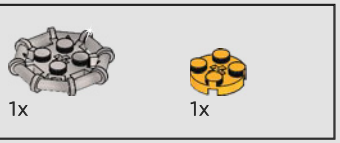

191

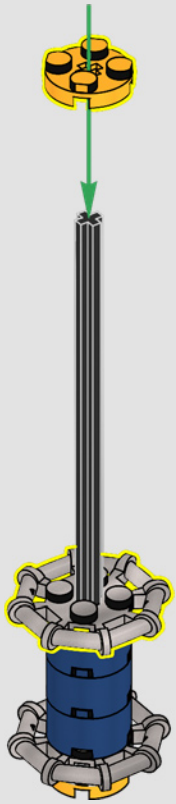

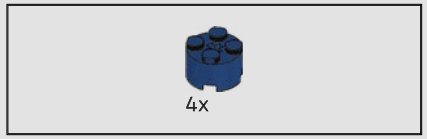

192

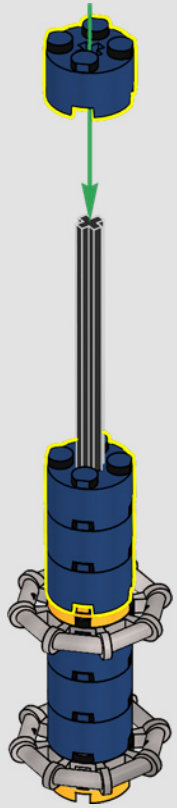

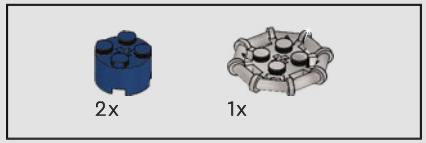

193

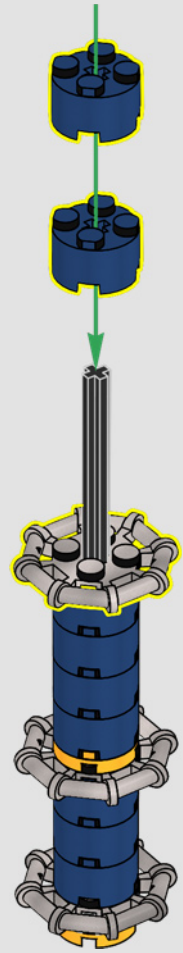

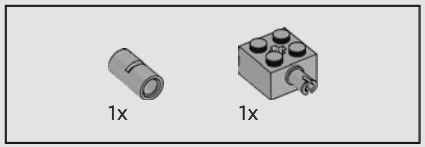

194

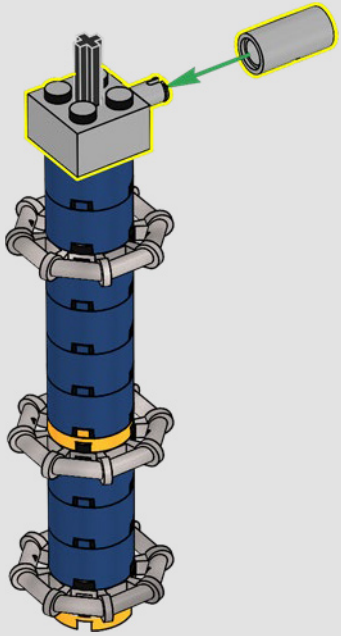

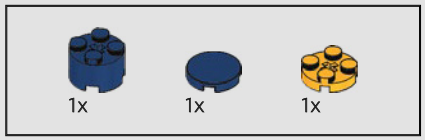

195

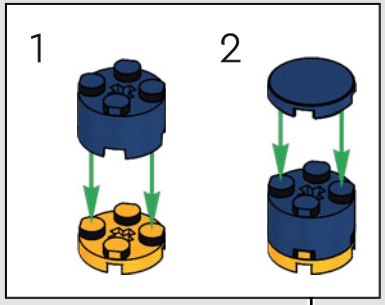

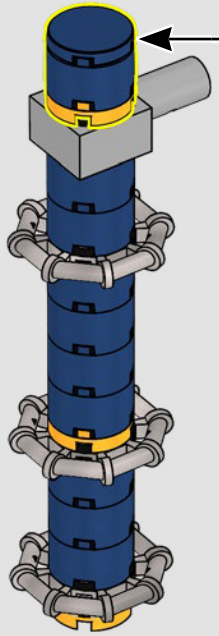

196

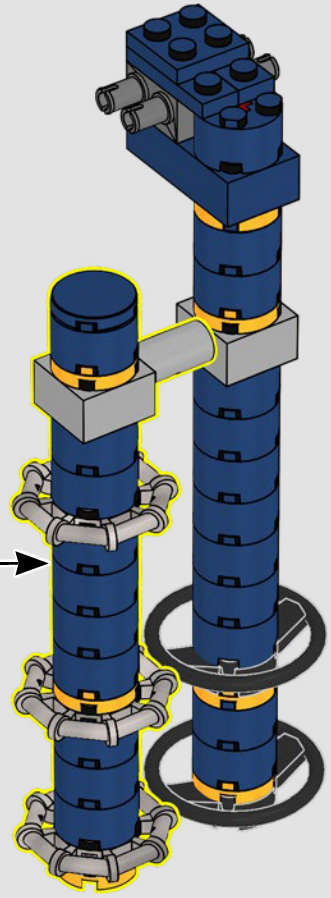

197

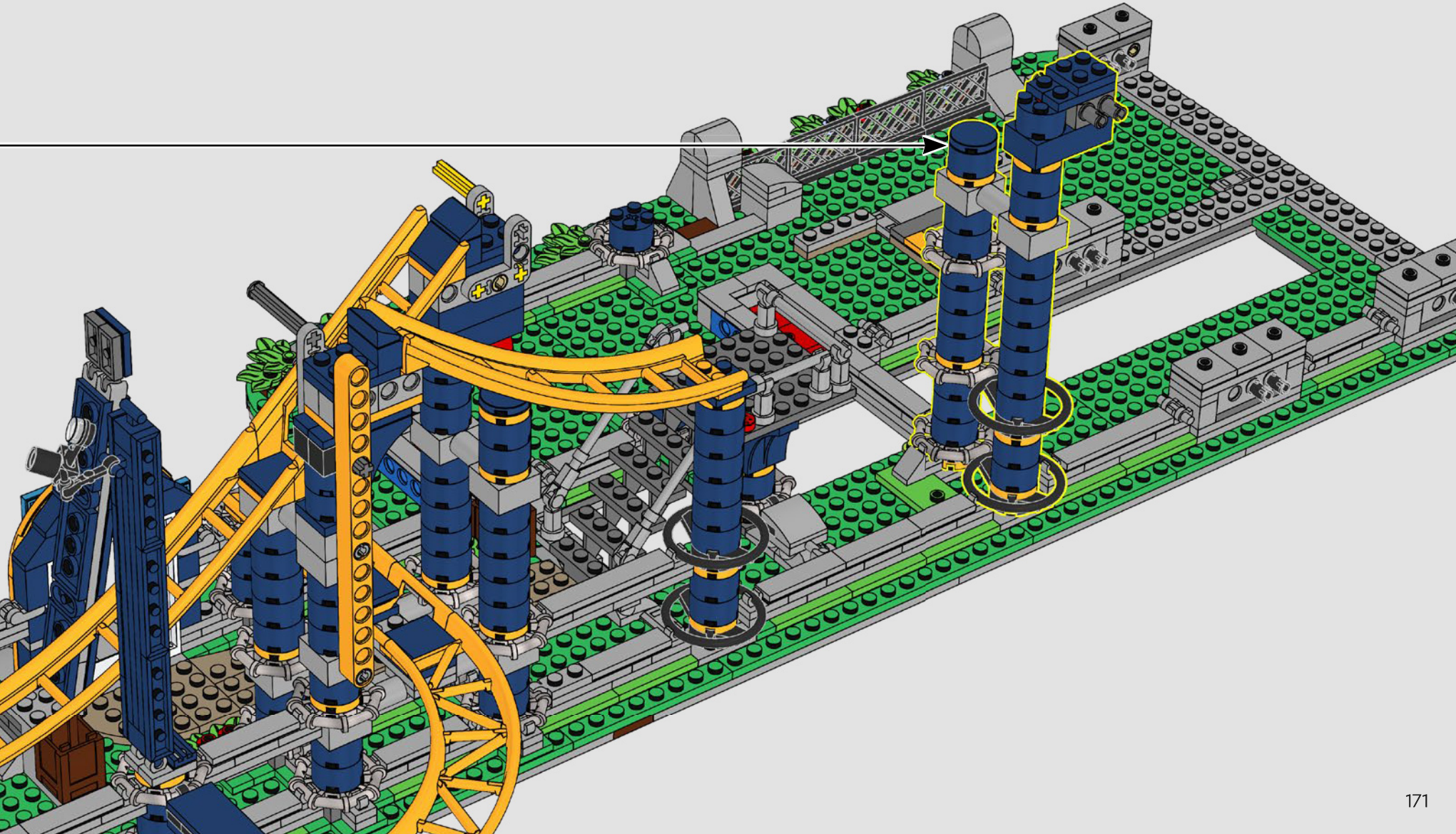

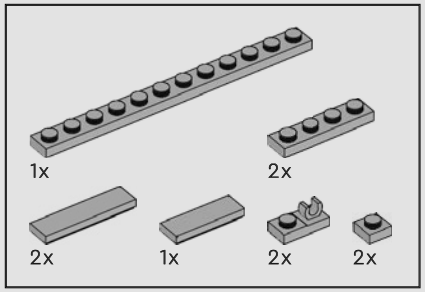

198

1

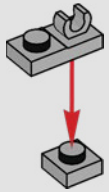

2

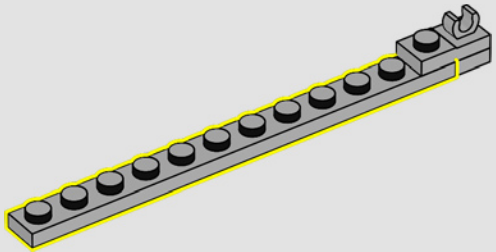

3

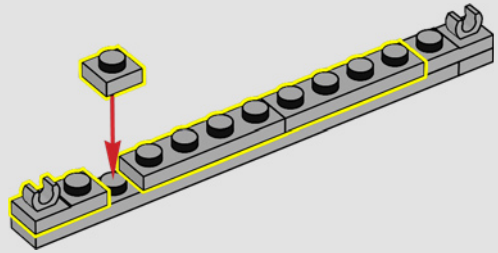

4

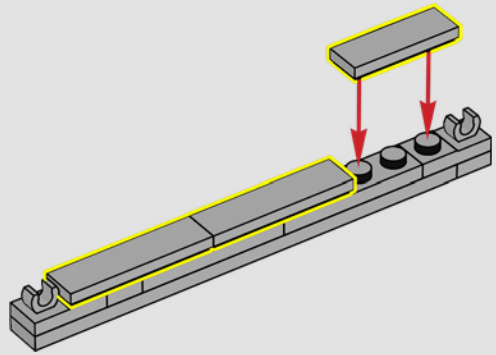

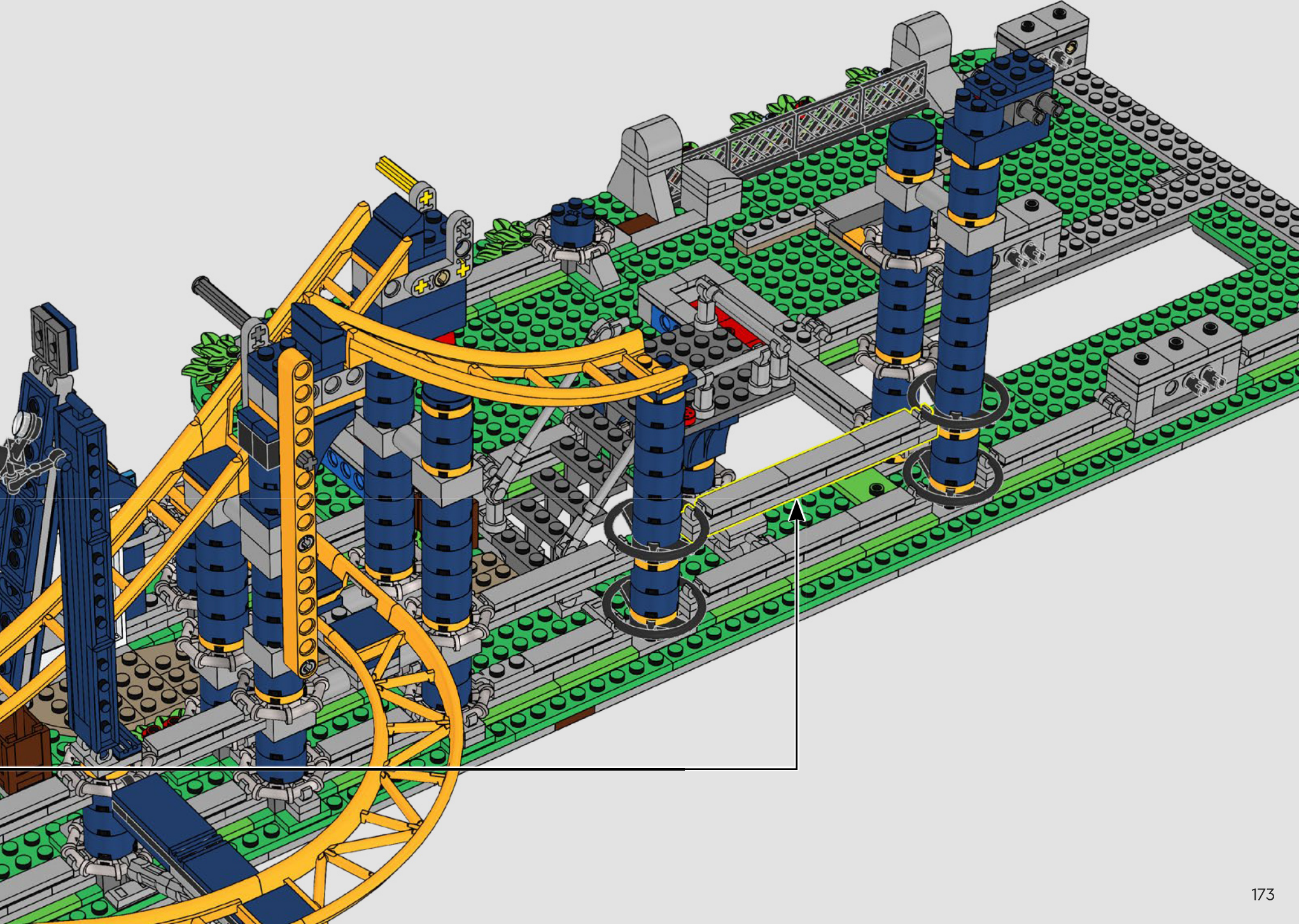

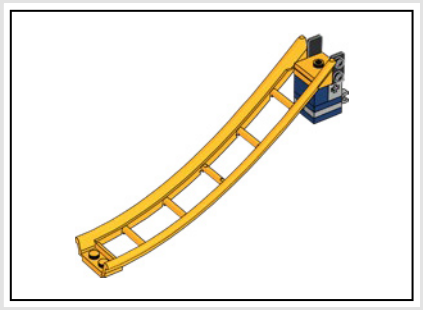

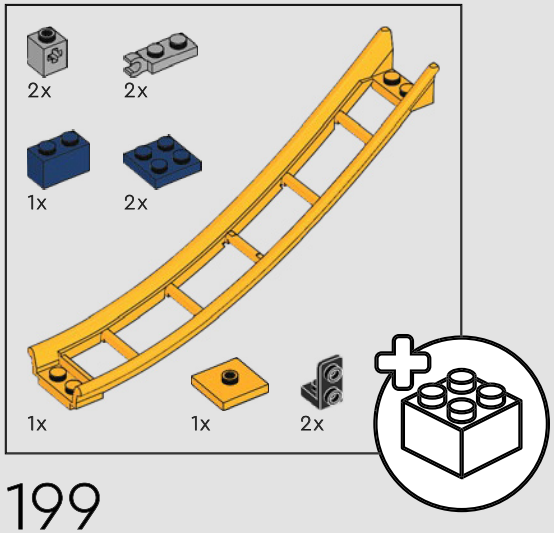

199

1

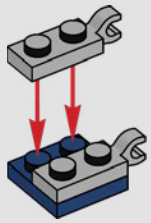

2

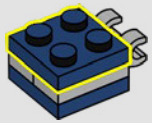

3

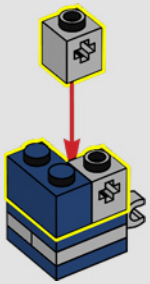

4

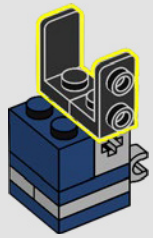

5

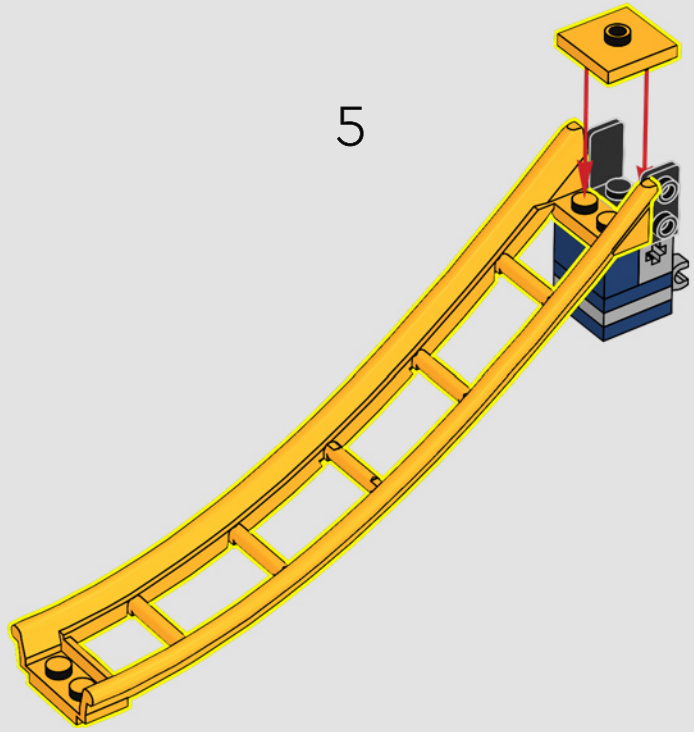

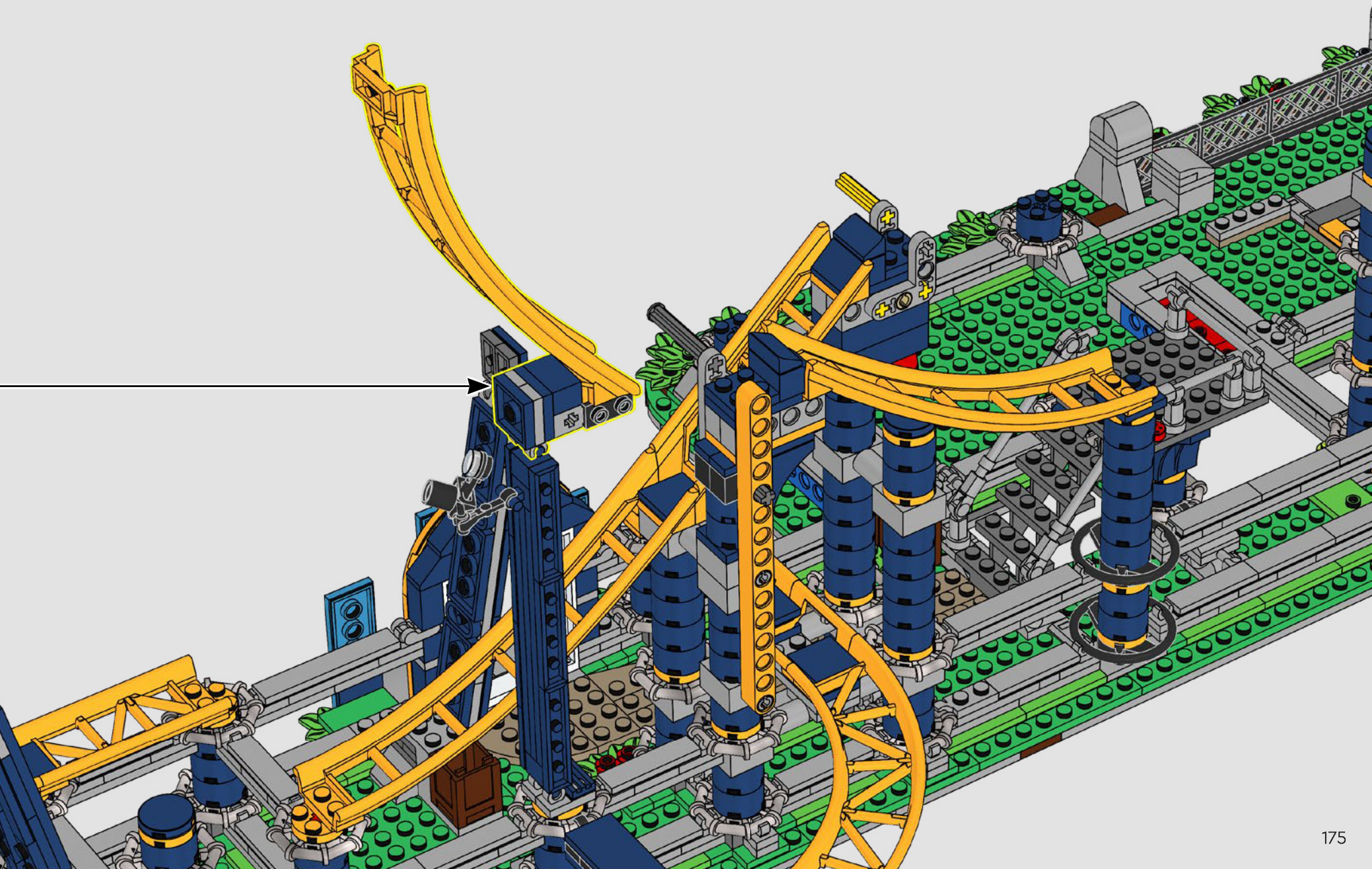

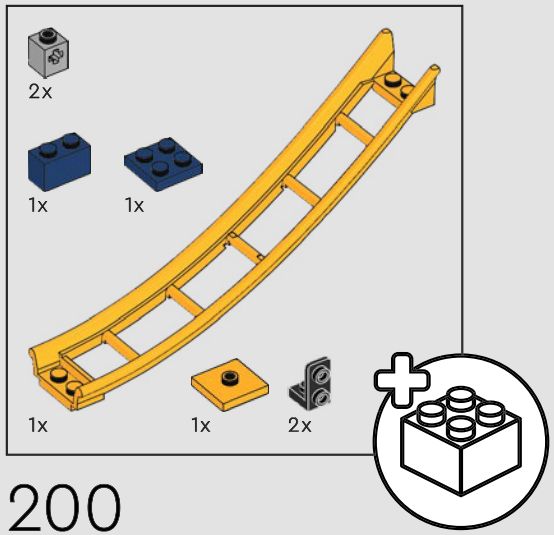

200

1

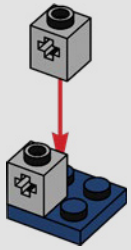

2

3

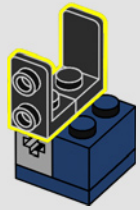

4

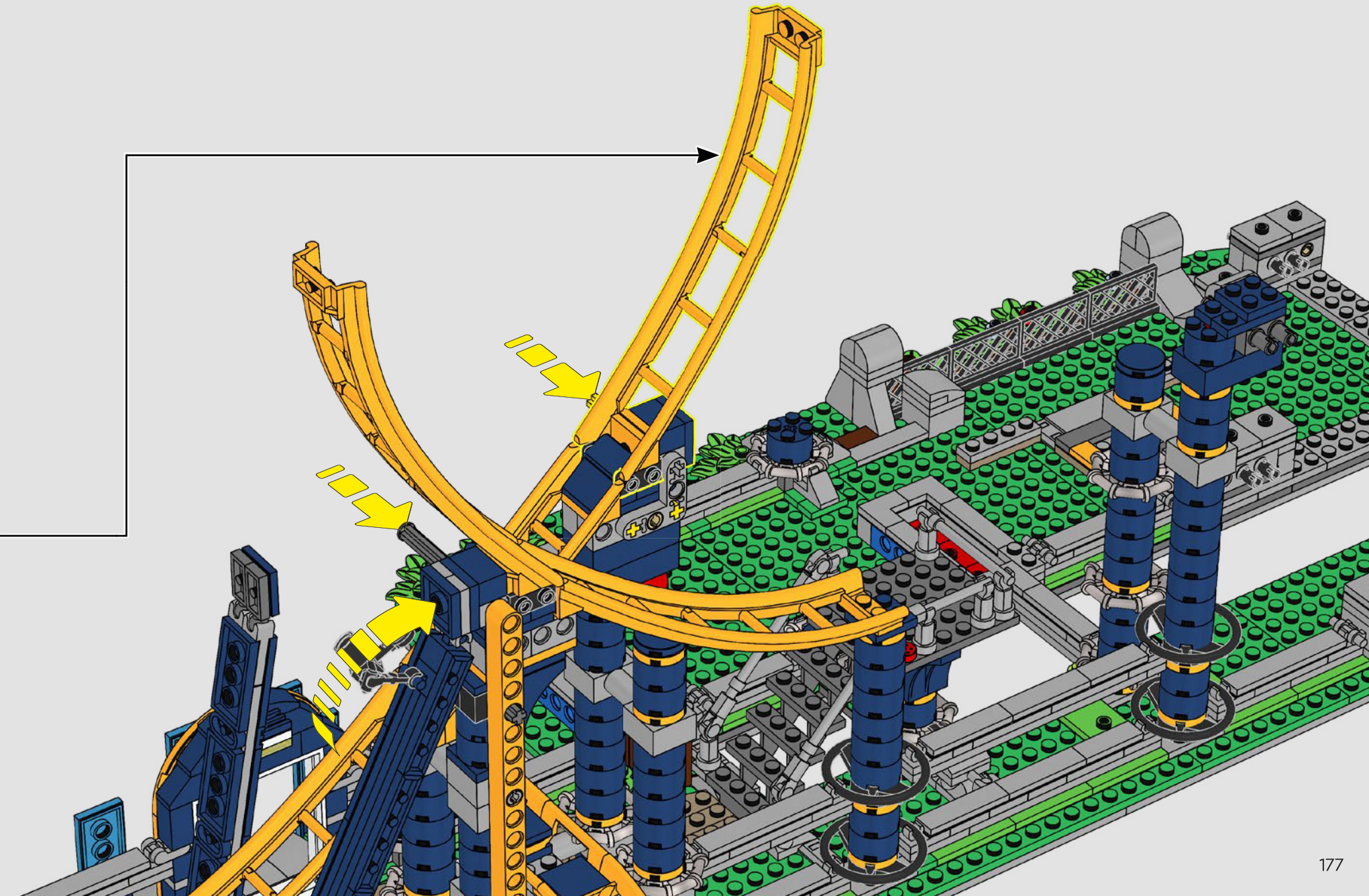

2x

201

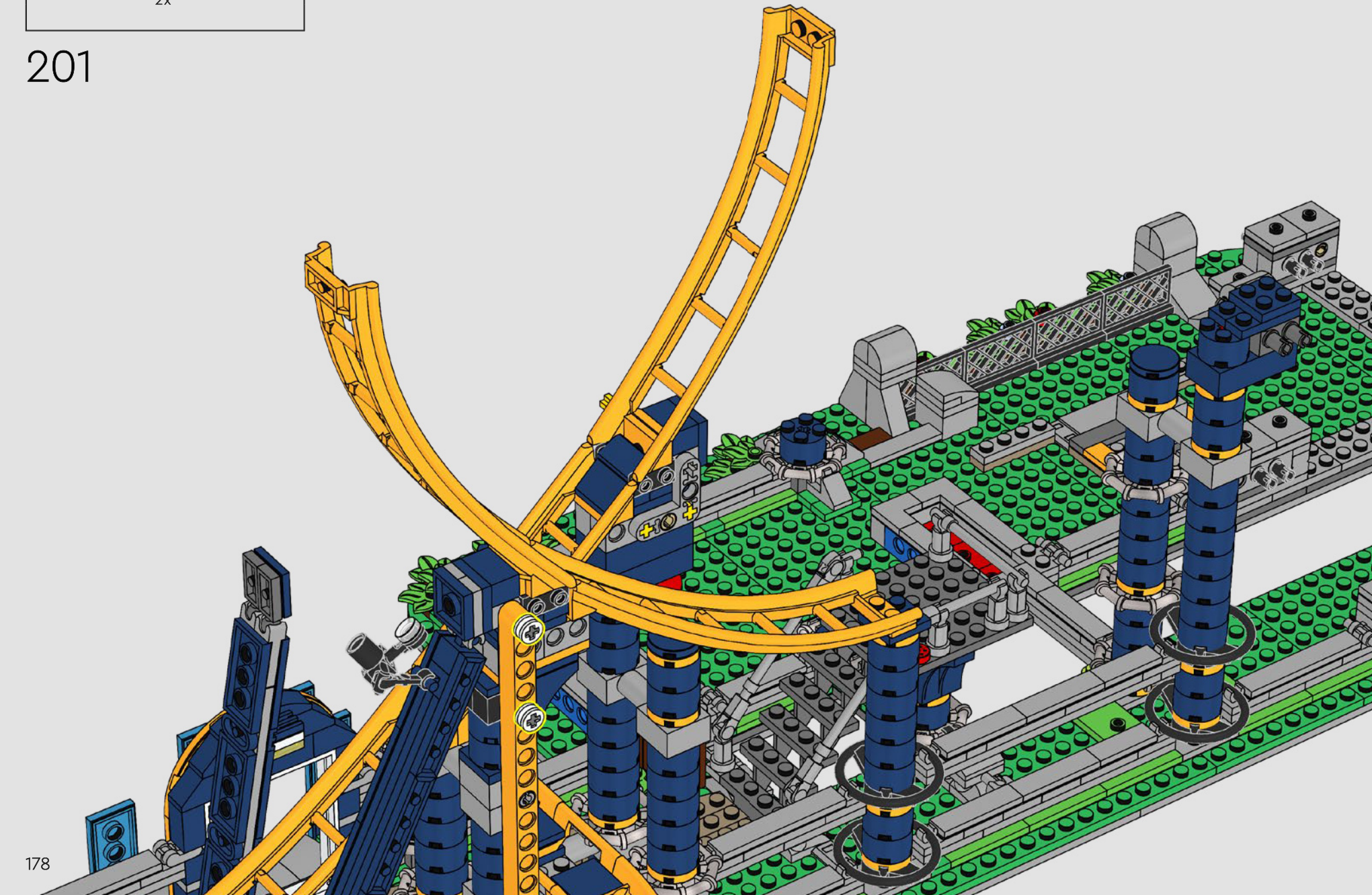

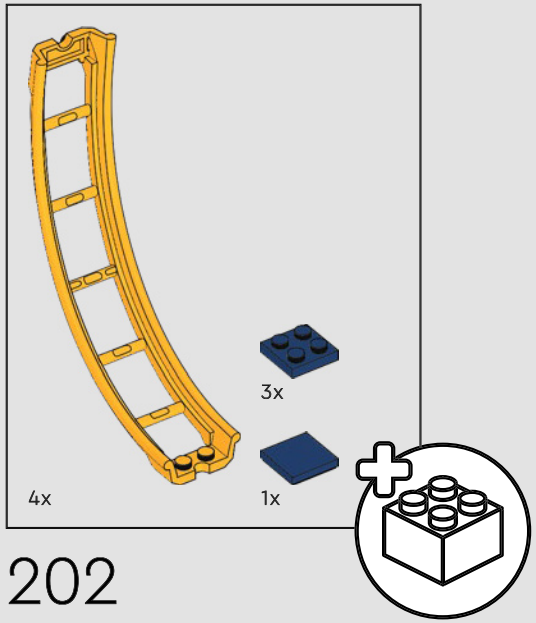

202

1

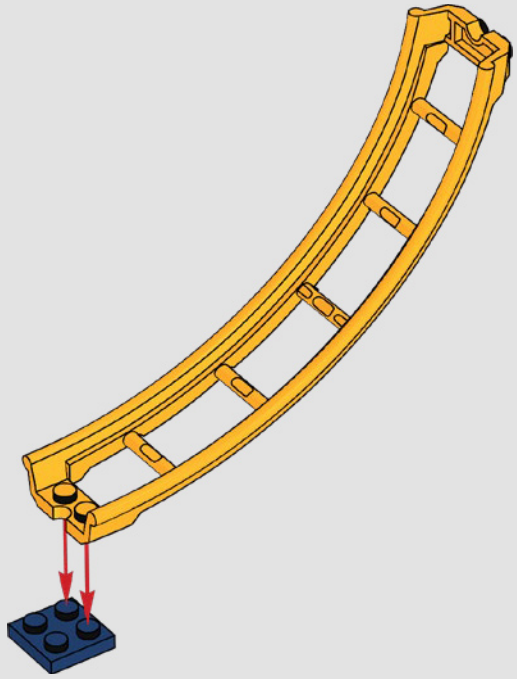

2

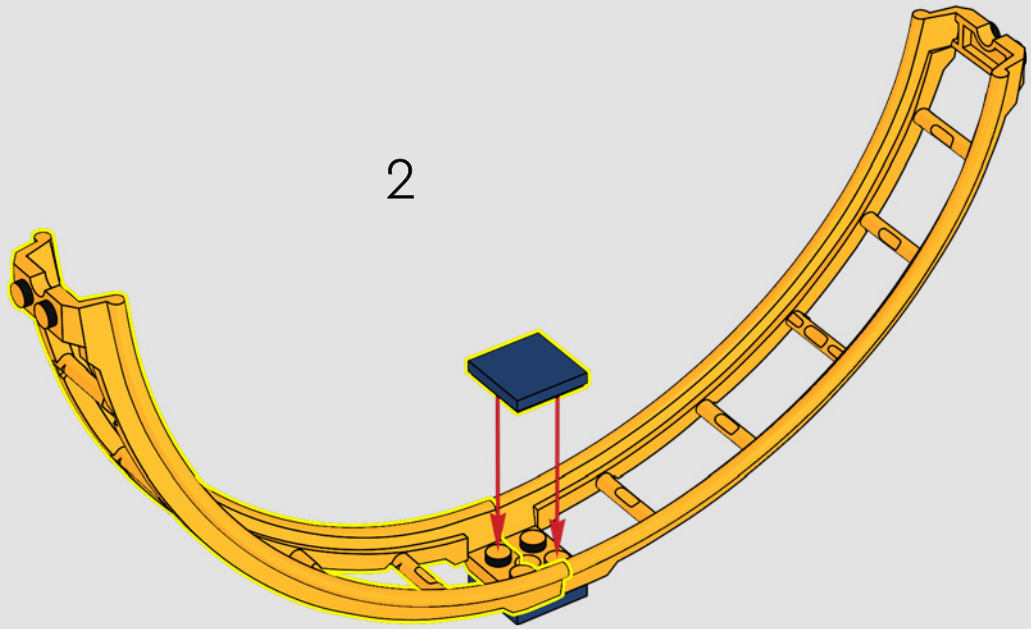

3

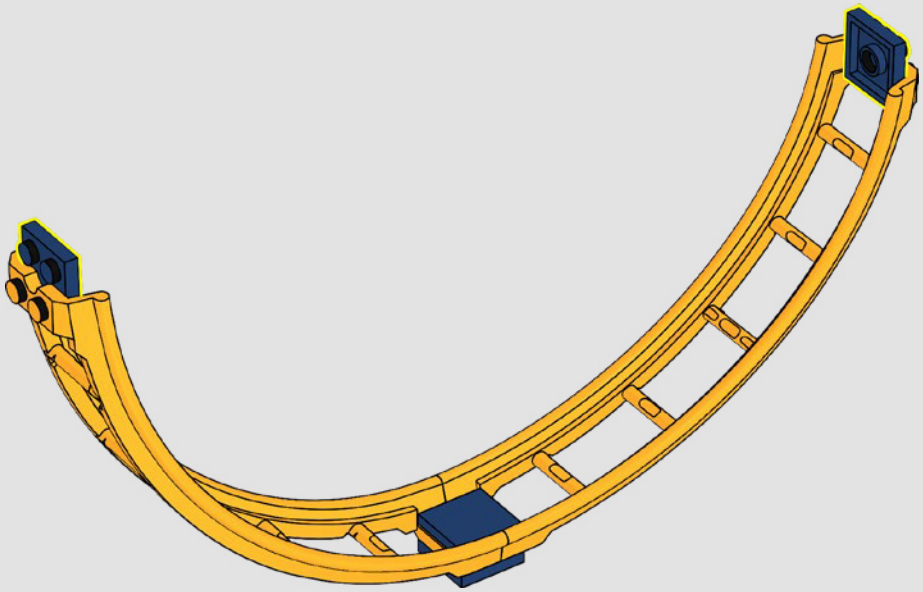

4

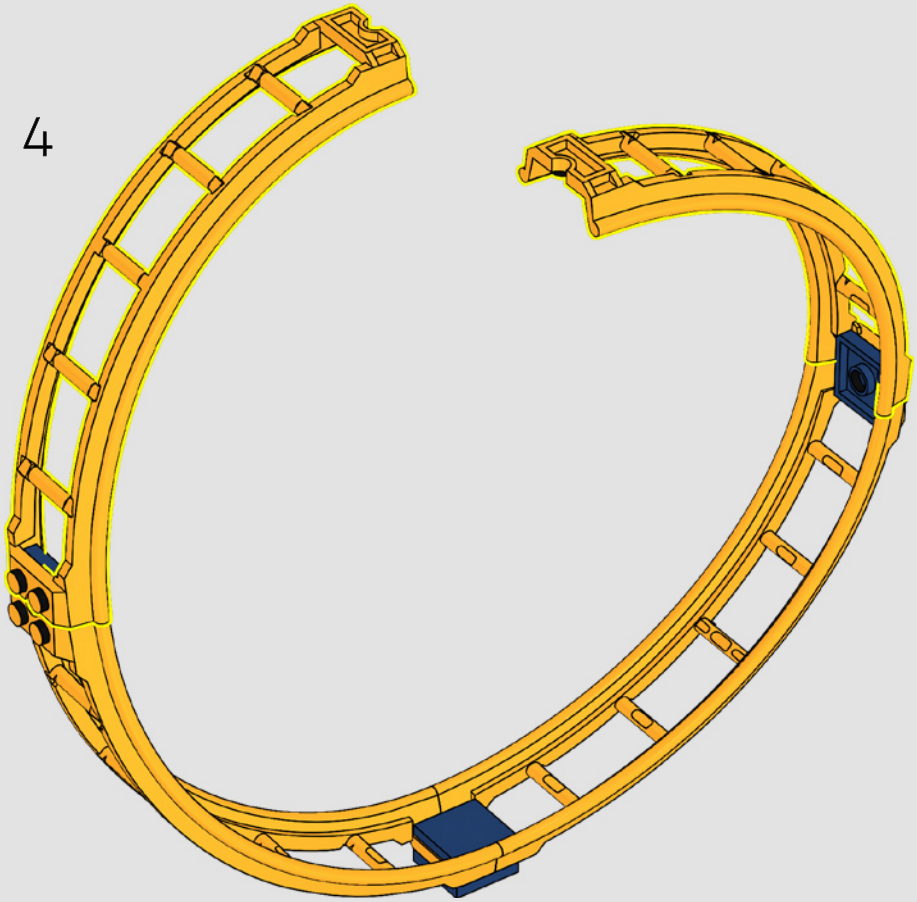

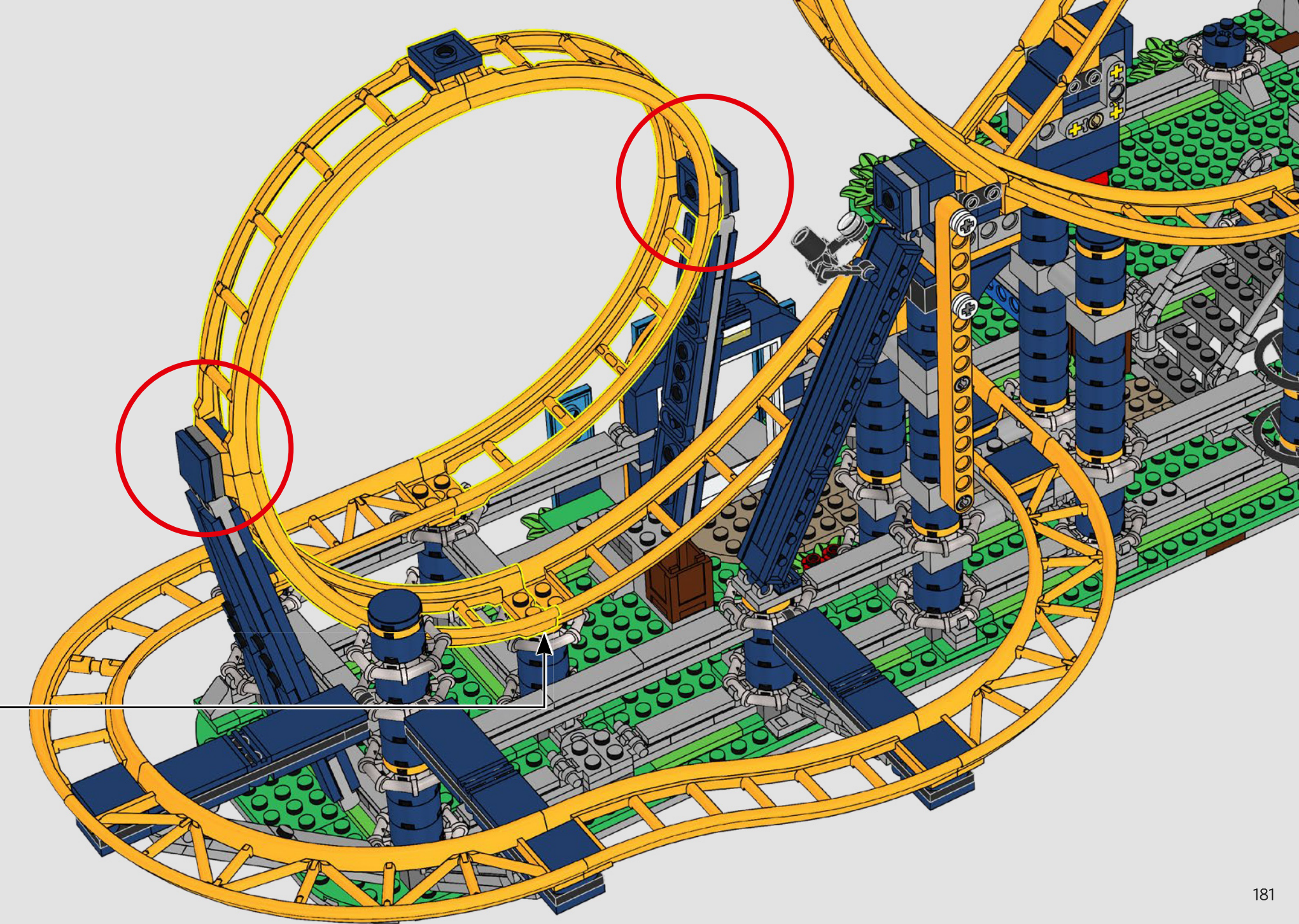

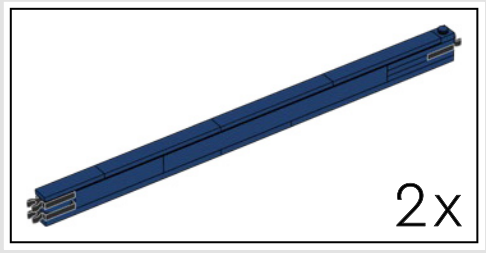

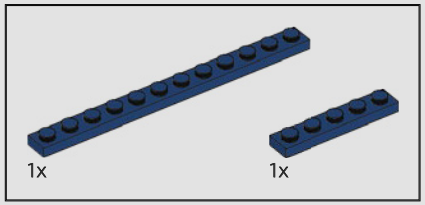

203

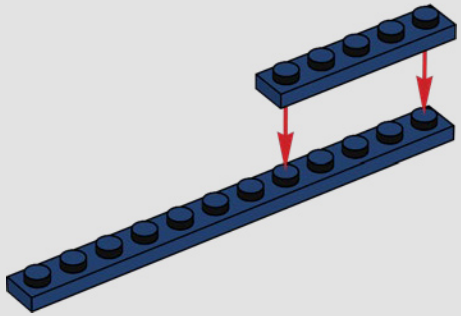

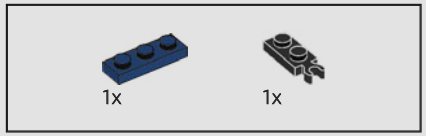

204

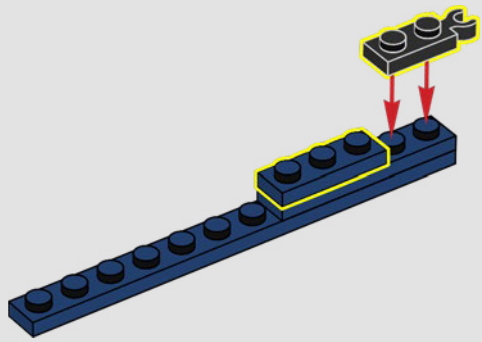

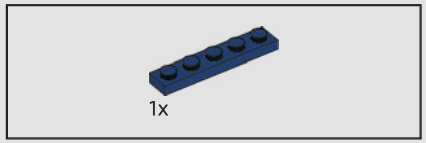

205

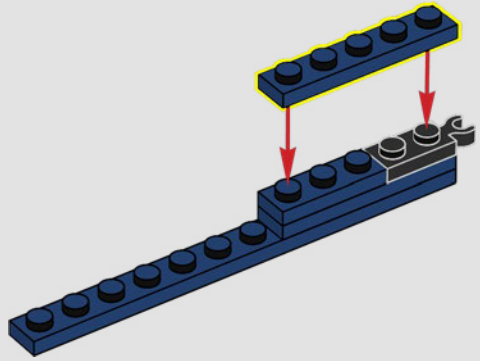

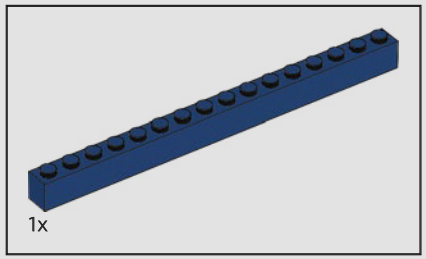

206

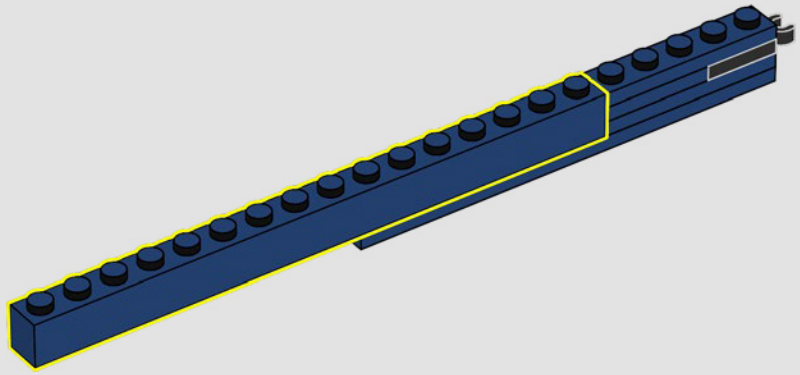

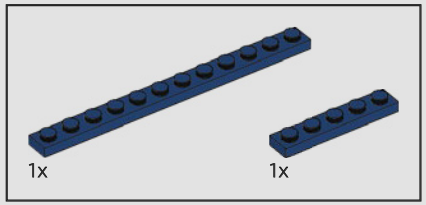

207

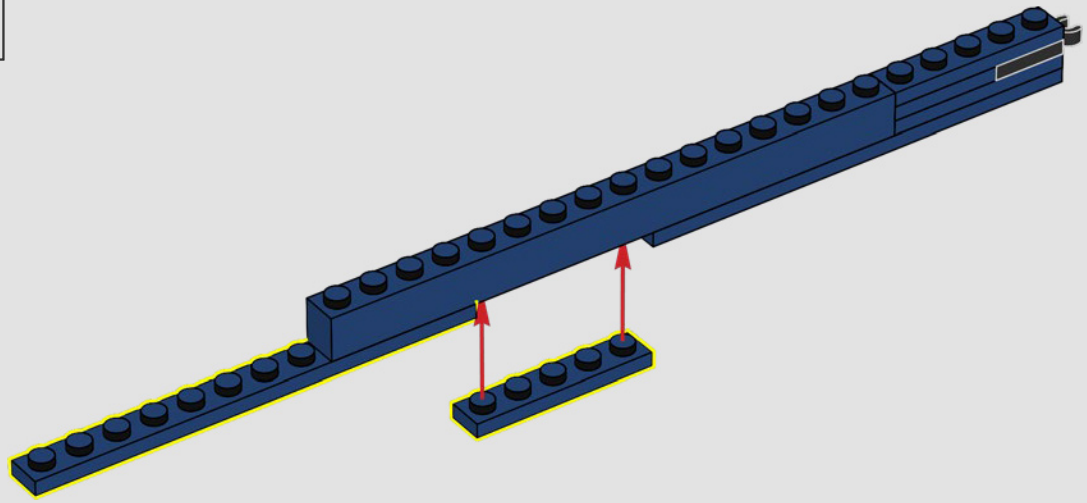

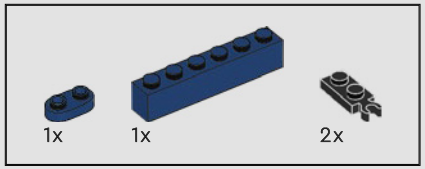

208

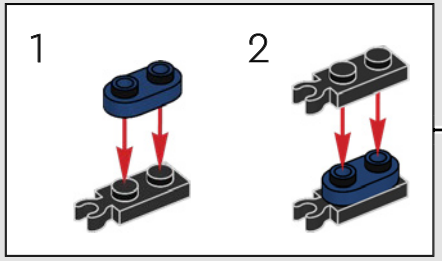

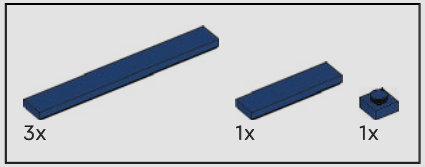

209

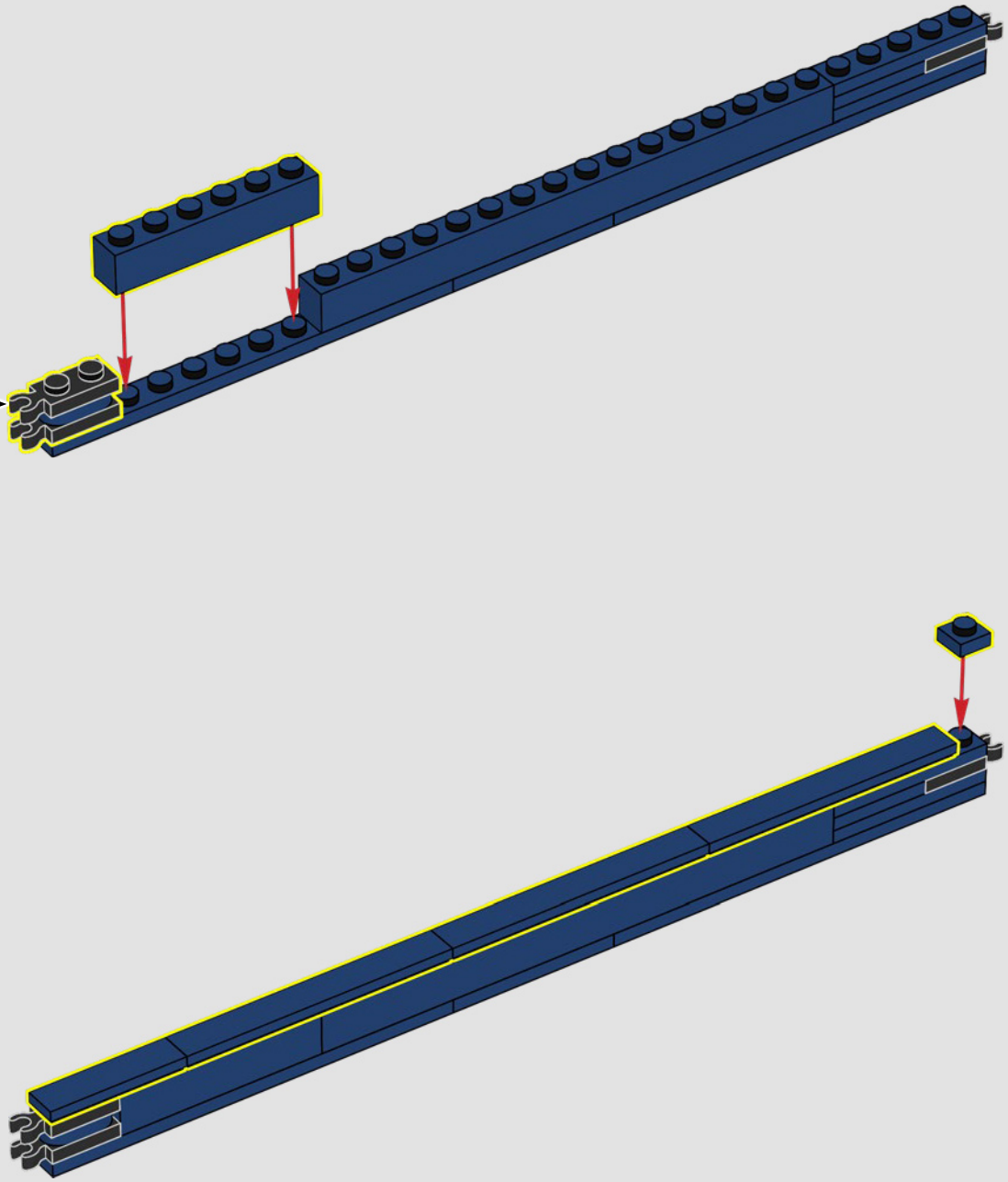

2x

210

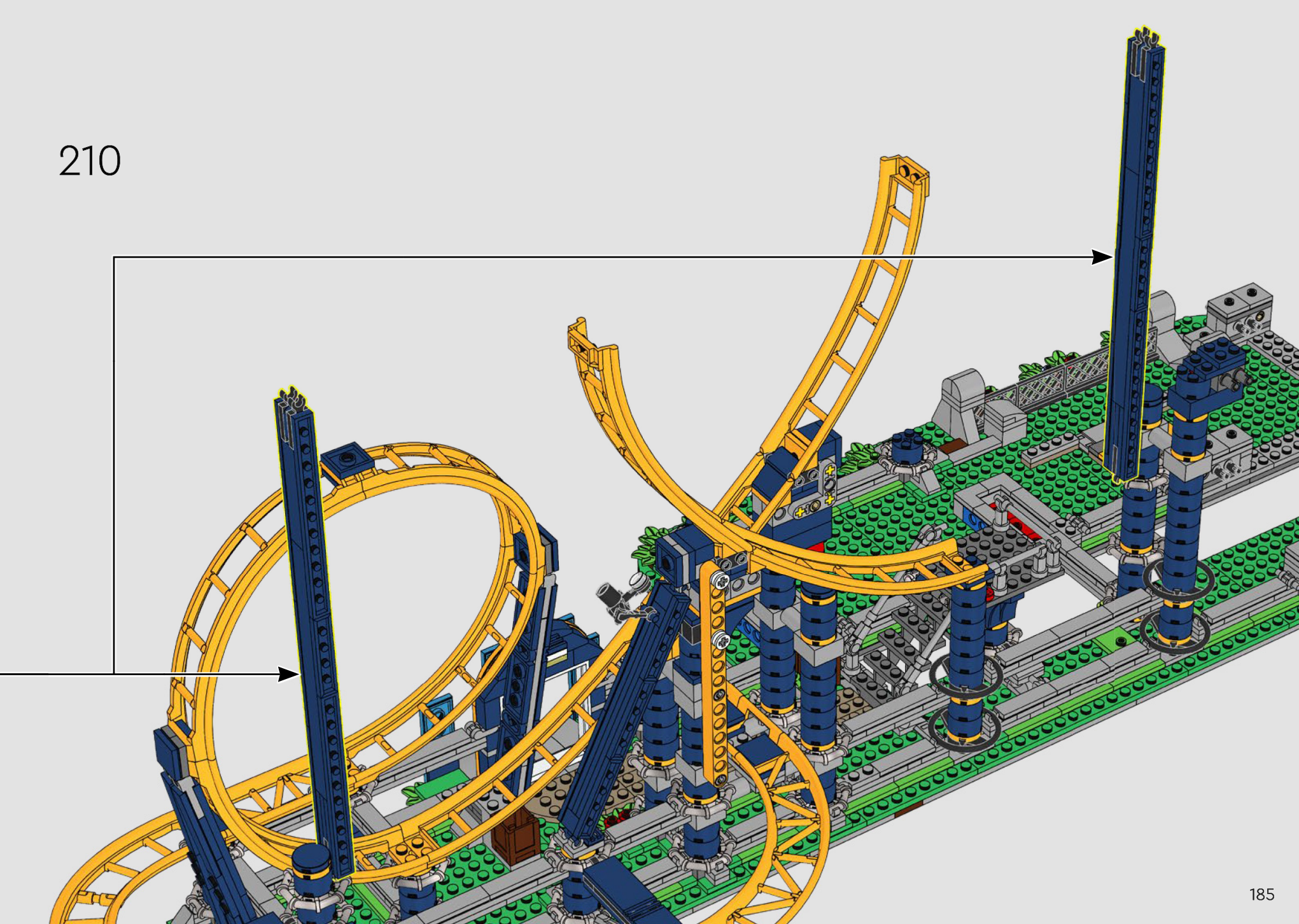

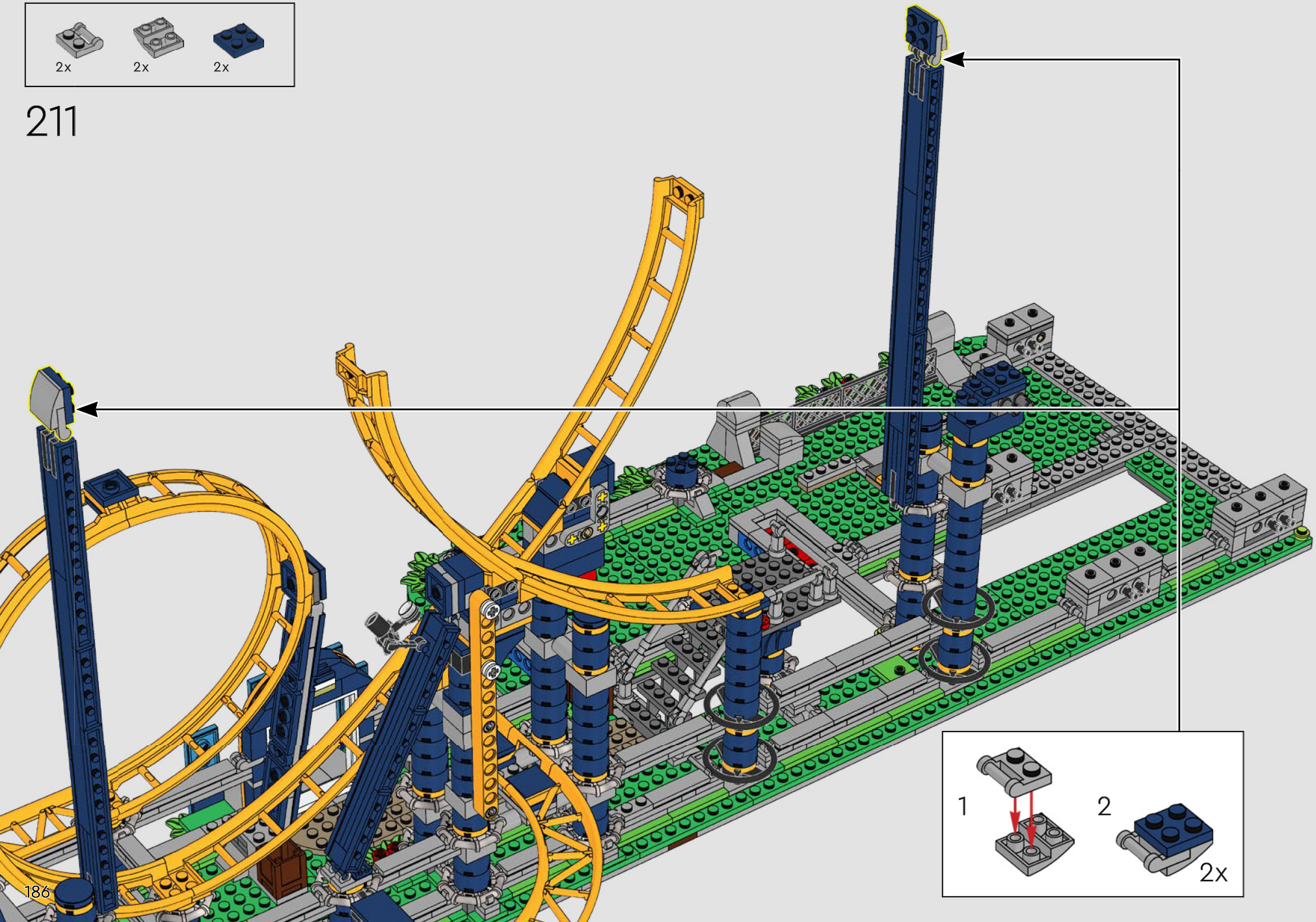
2x
2x
2x
211
1
2
2x

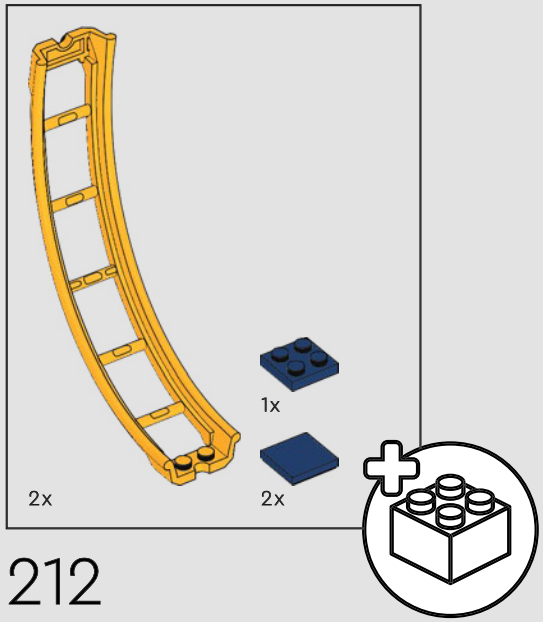

212

1

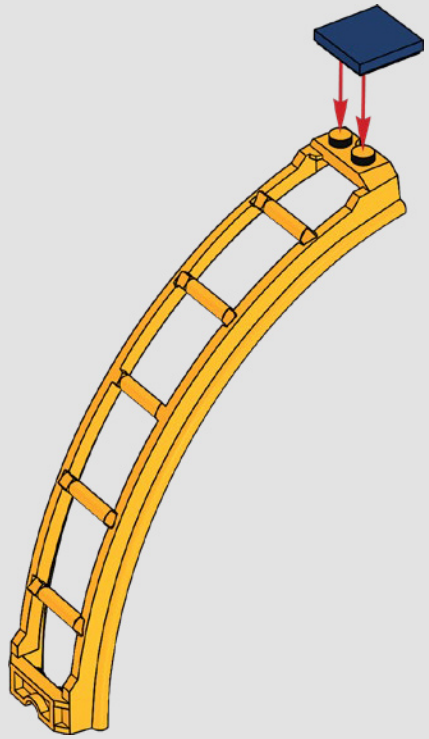

2

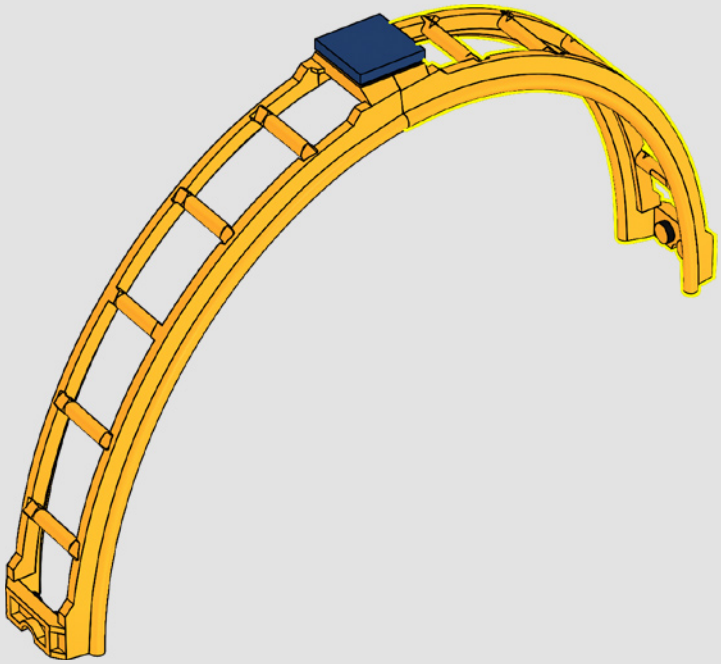

3

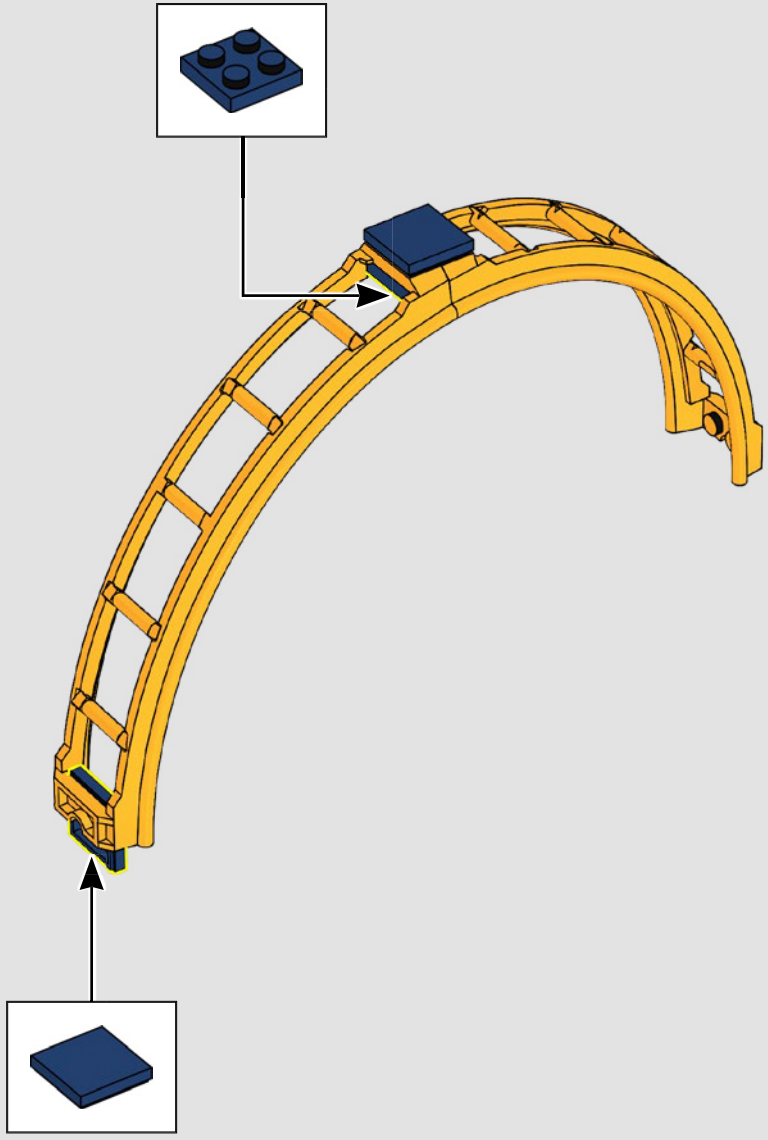

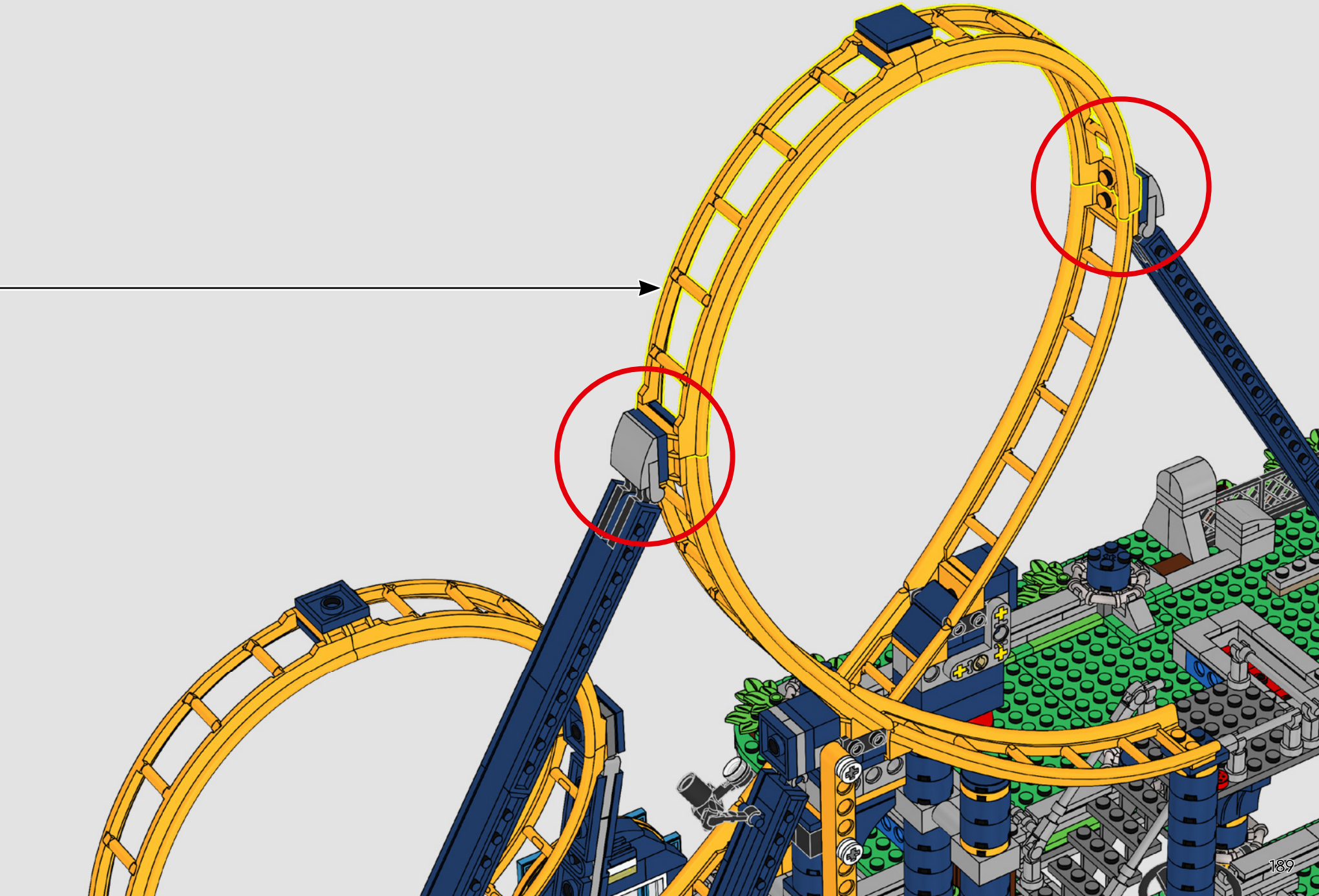

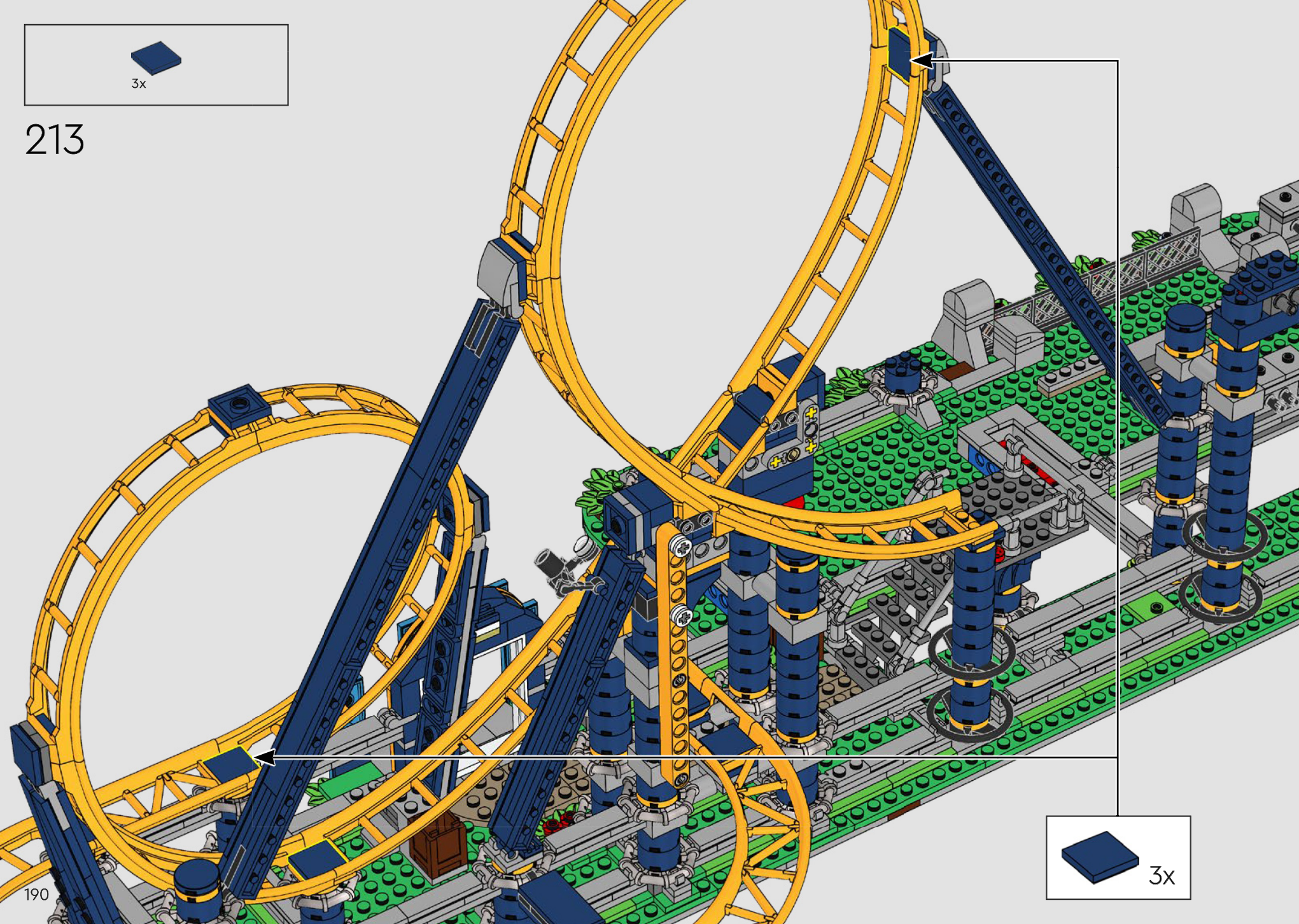
3x
213
3x

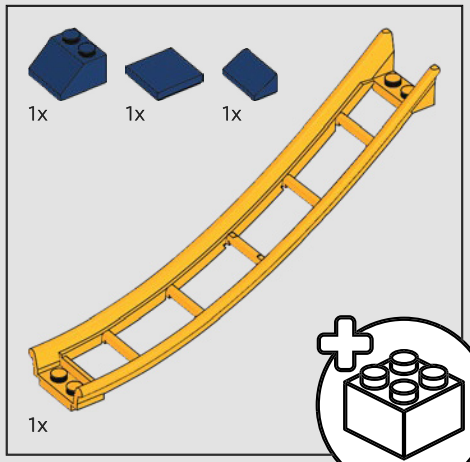

214

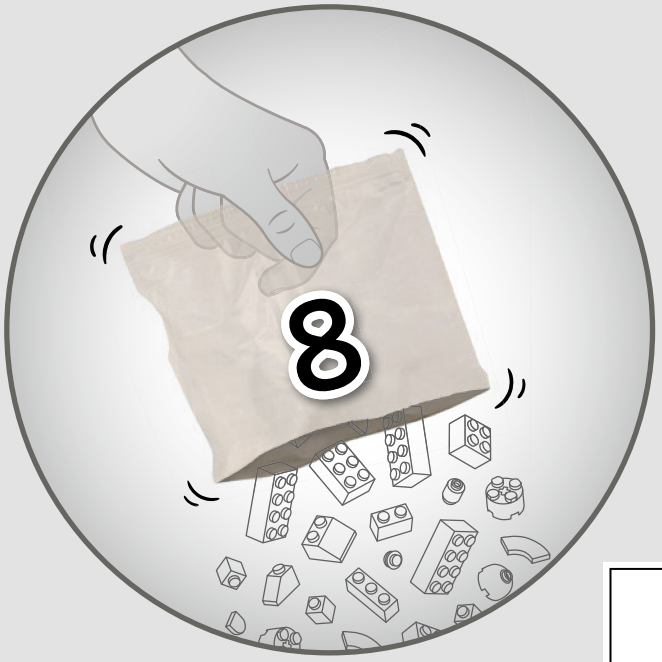
8

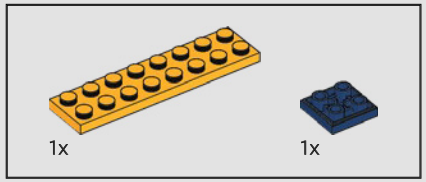

215

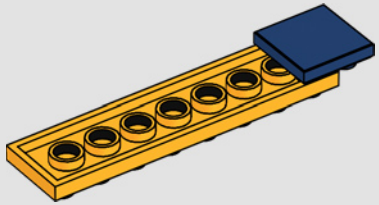

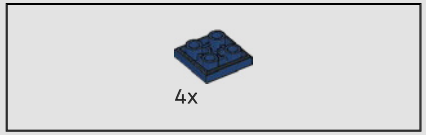

216

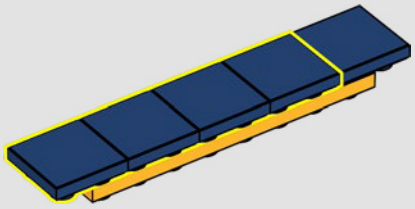

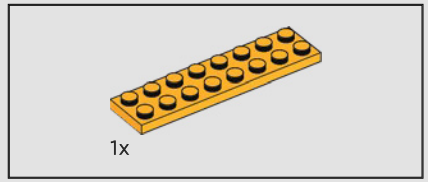

217

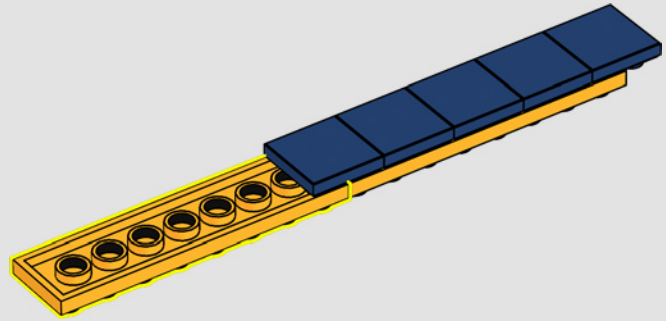

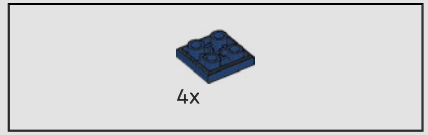

218

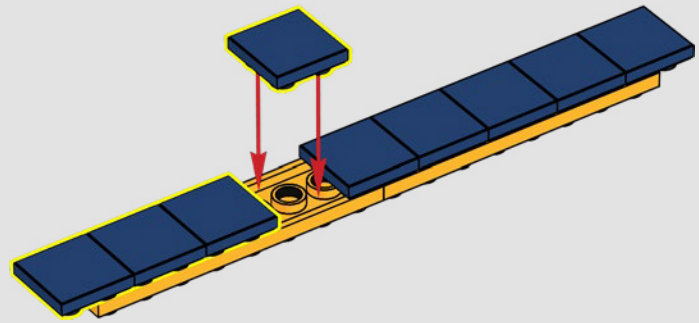

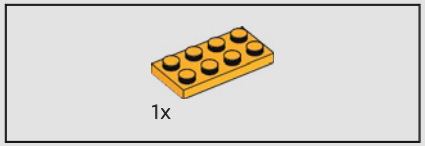

219

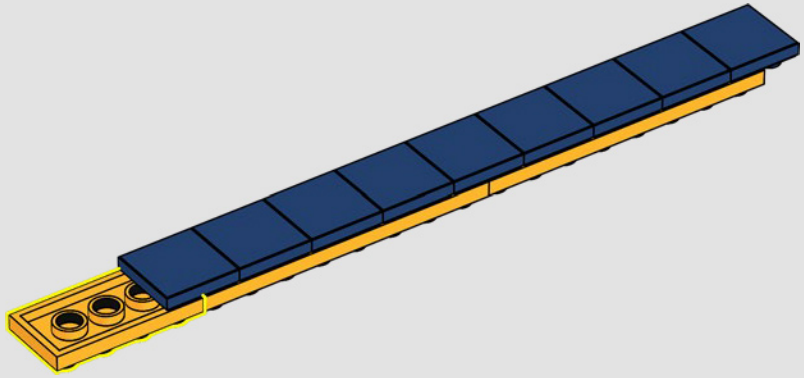

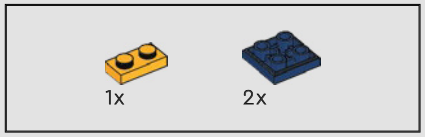

220

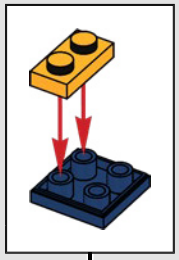

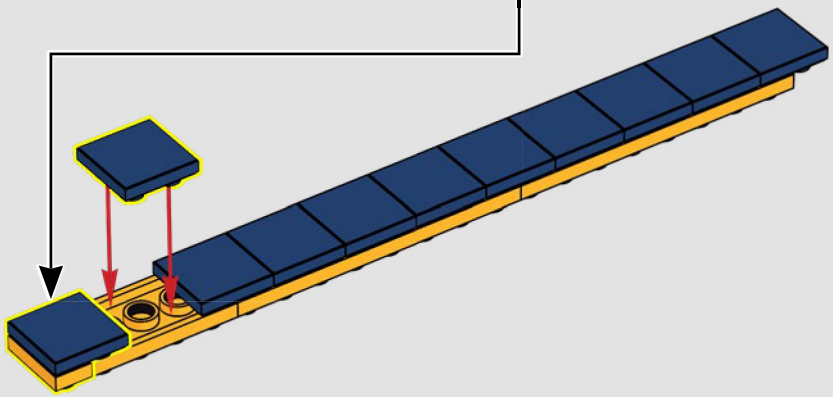

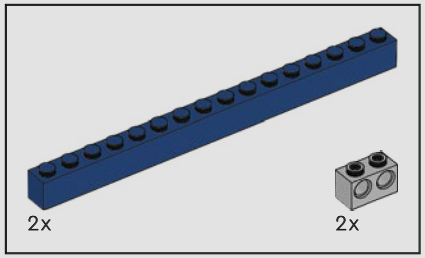

221

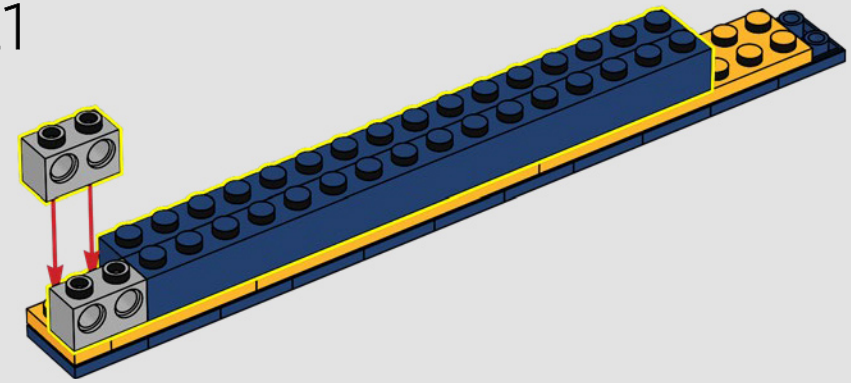

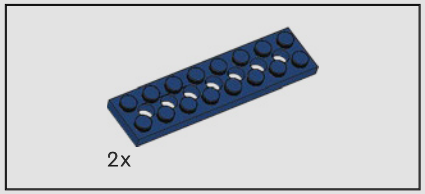

222

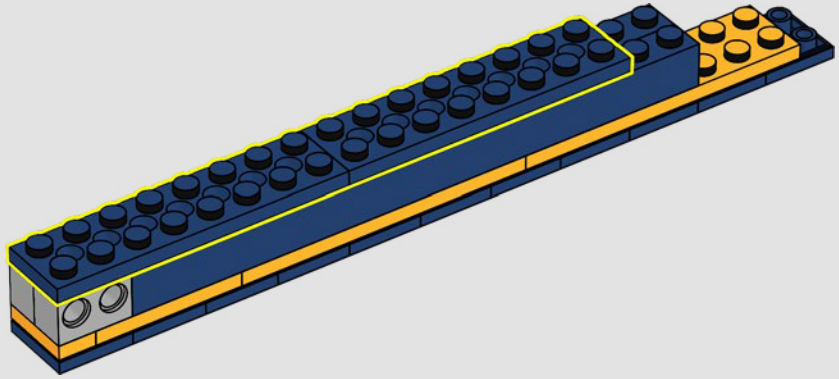

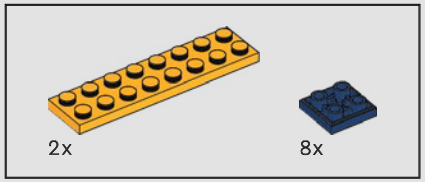

223

1

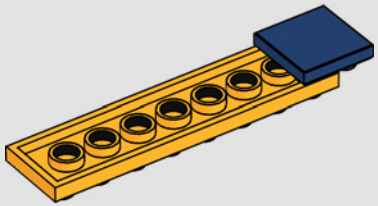

2

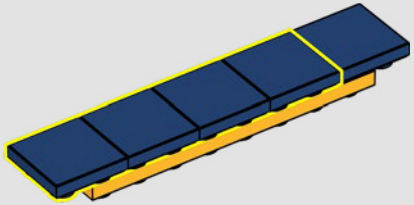

3

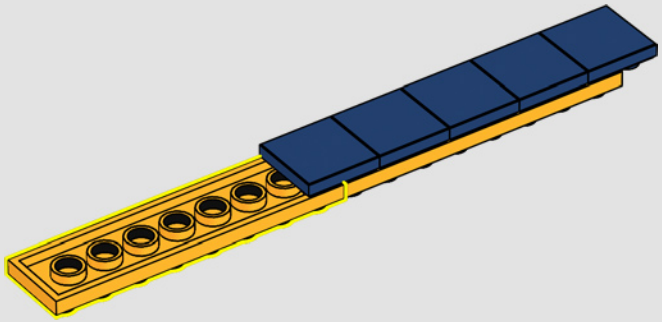

4

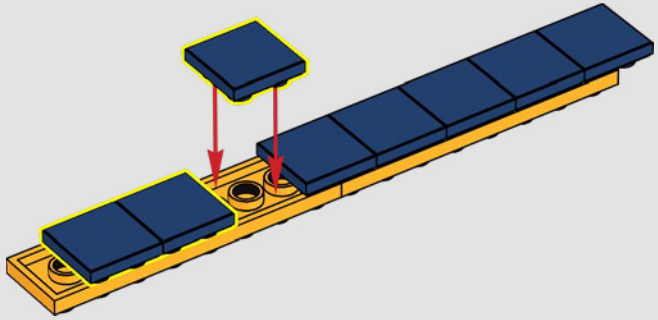

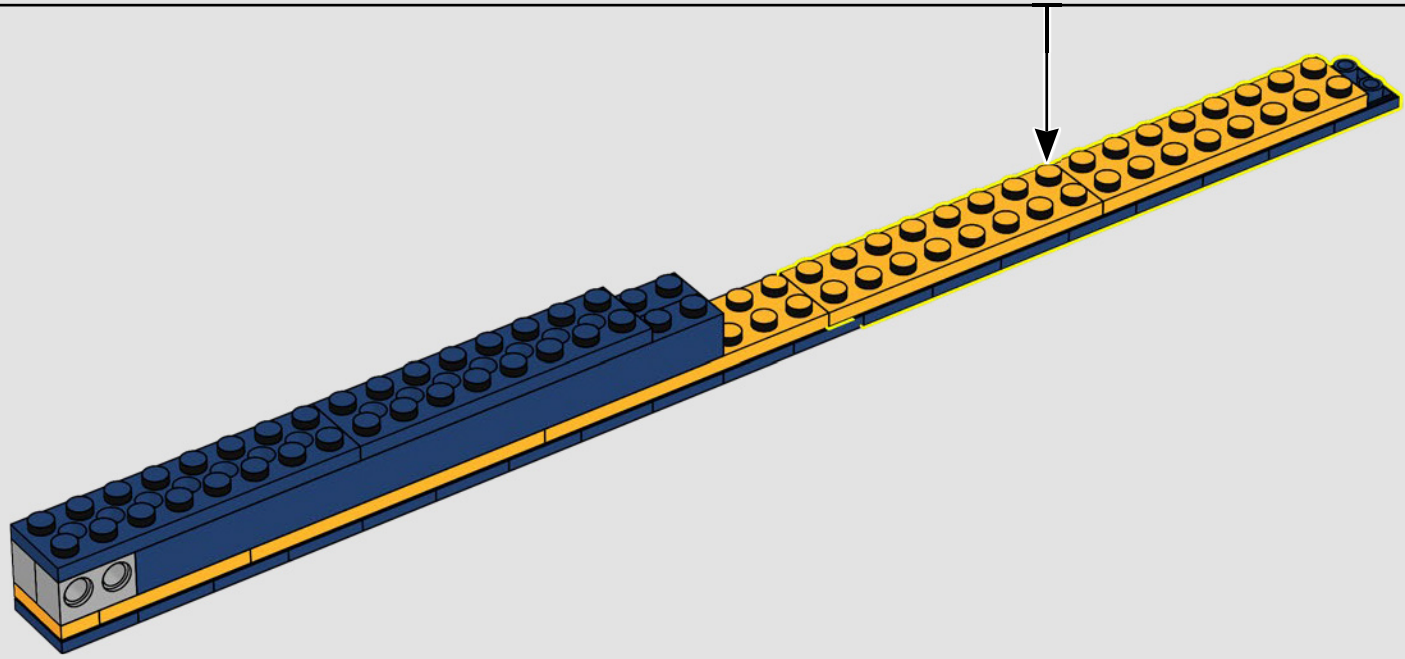

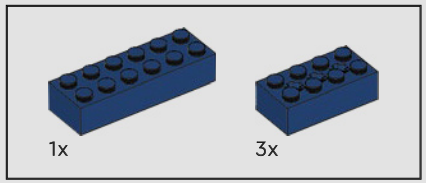

224

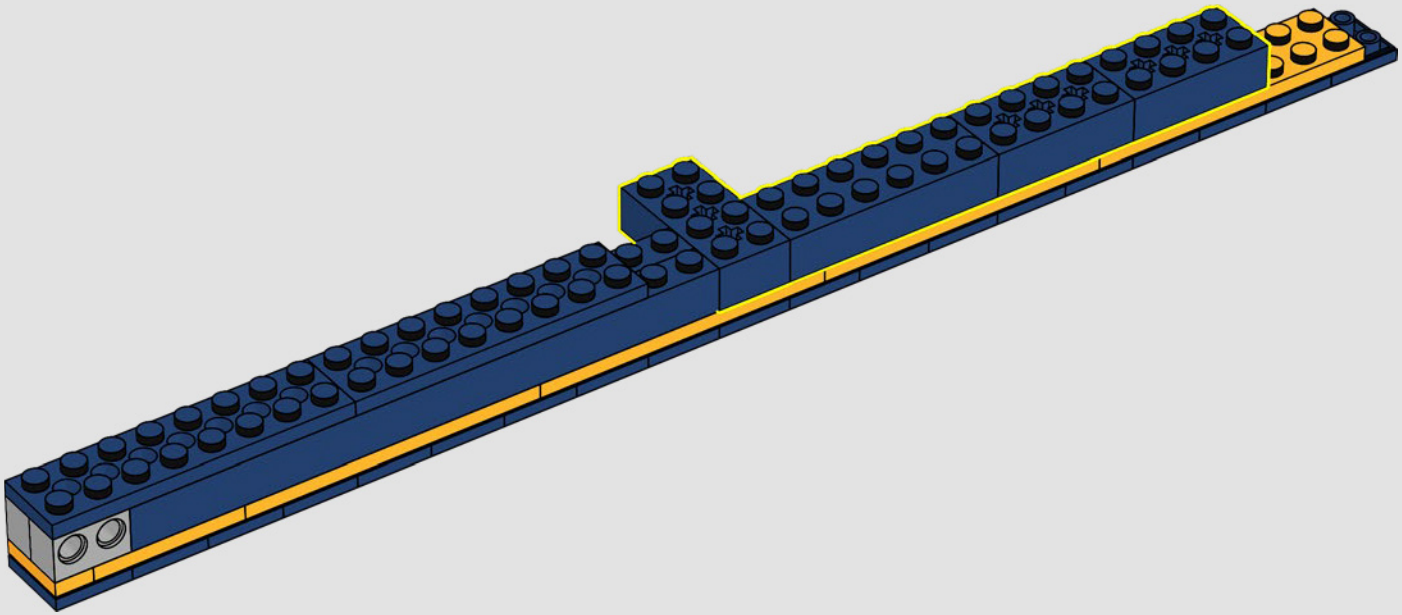

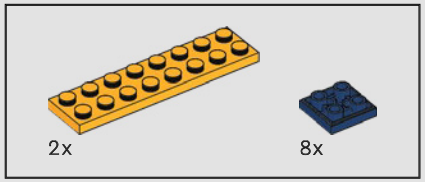

225

1

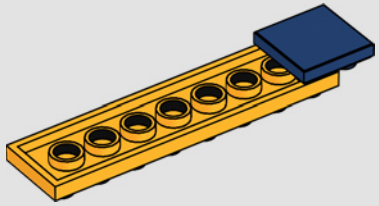

2

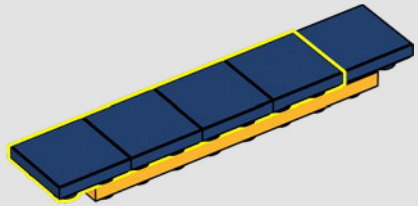

3

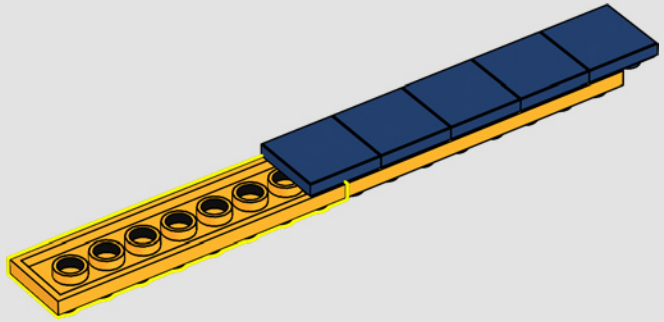

4

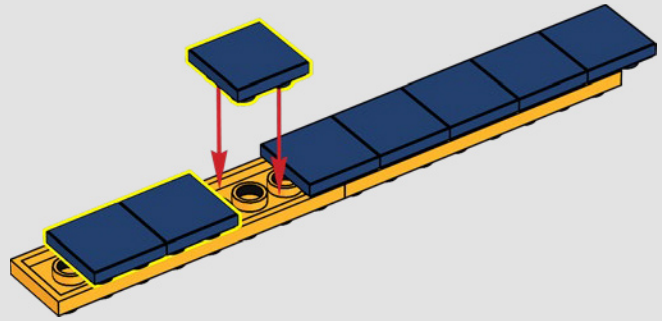

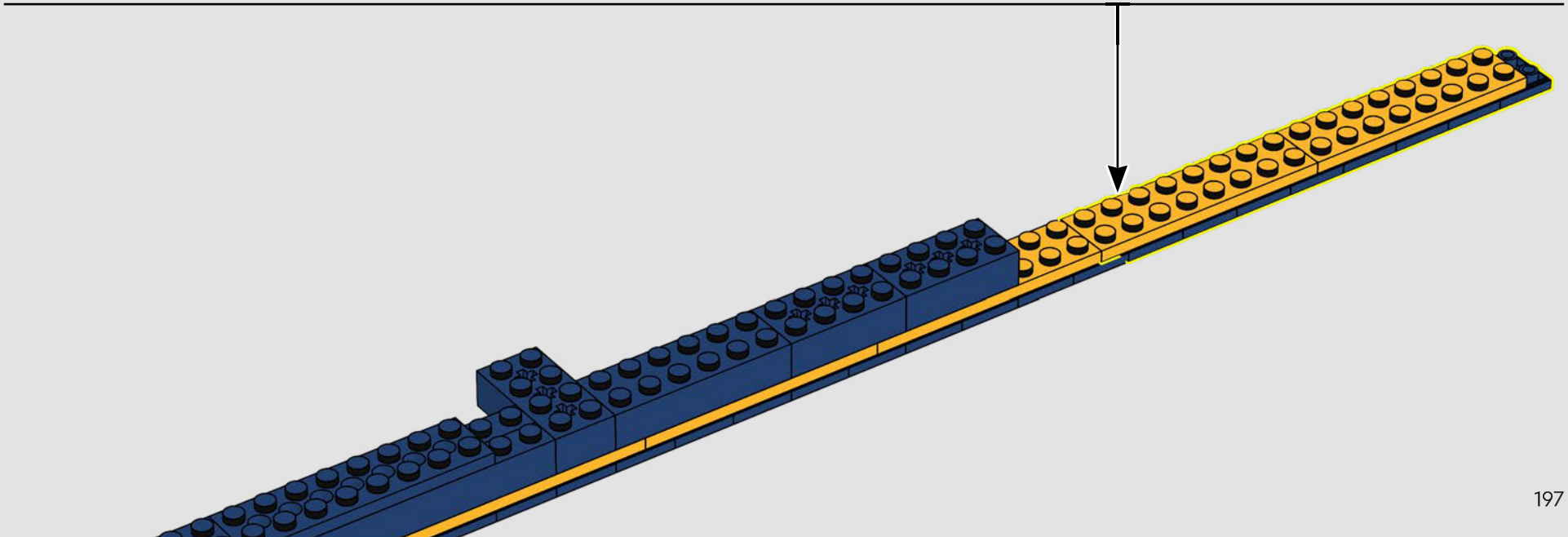

226

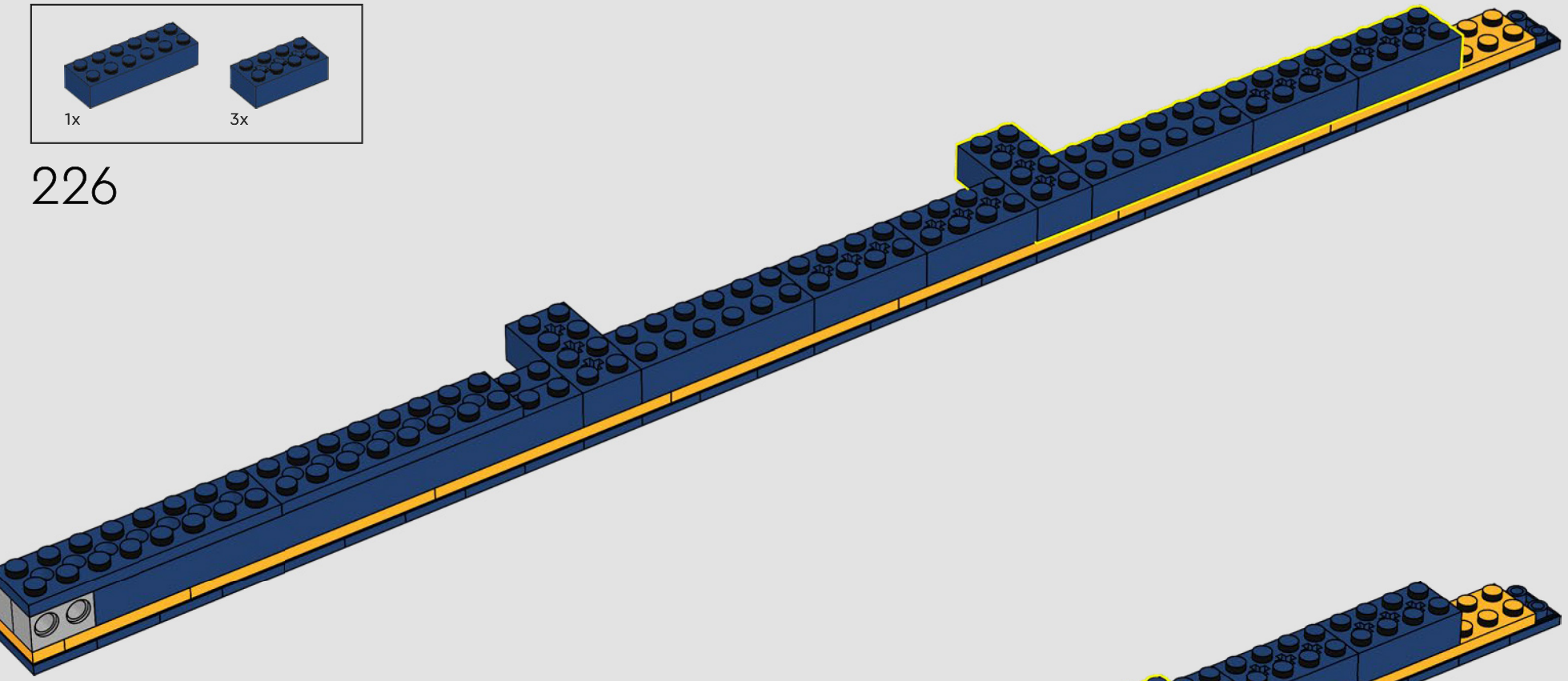

227

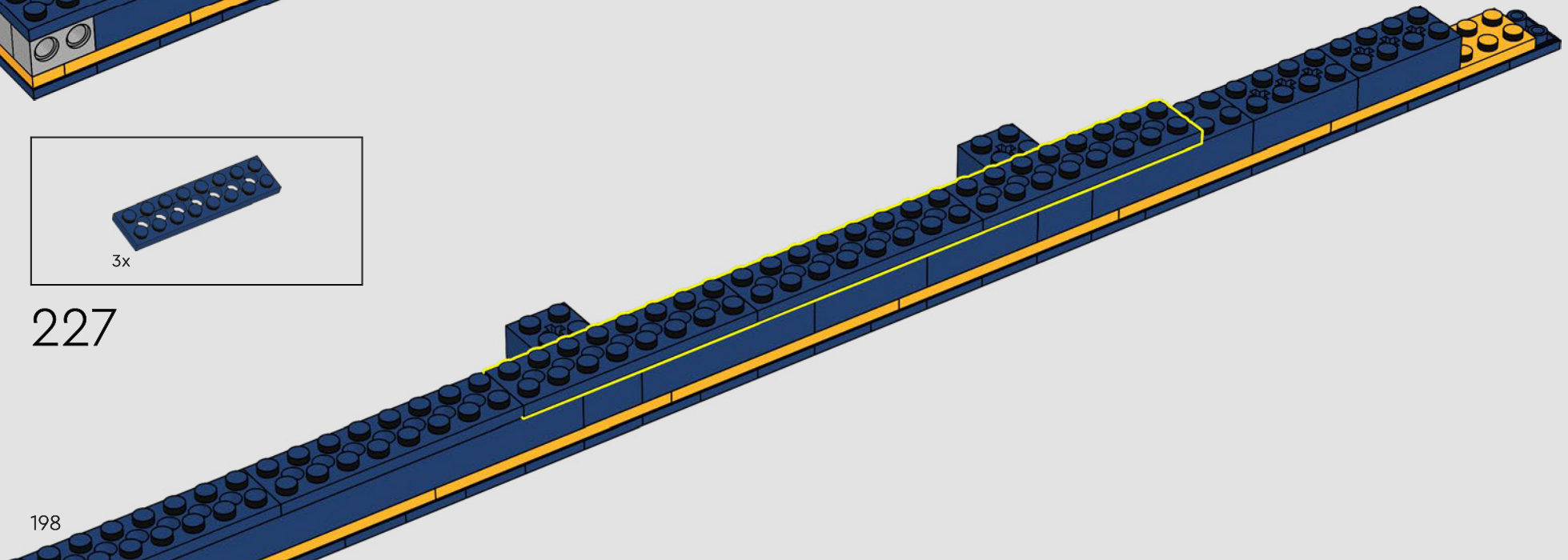

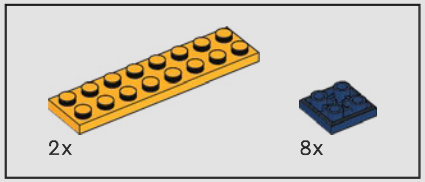

228

1

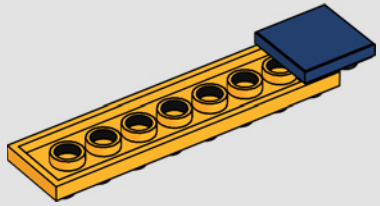

2

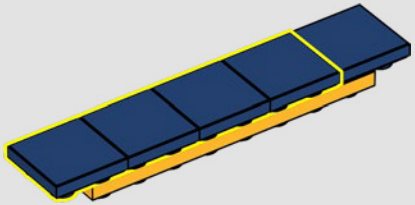

3

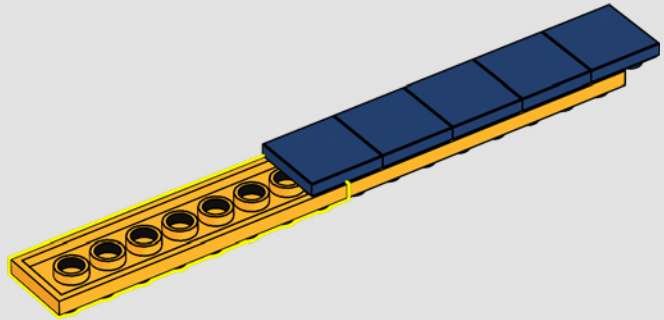

4

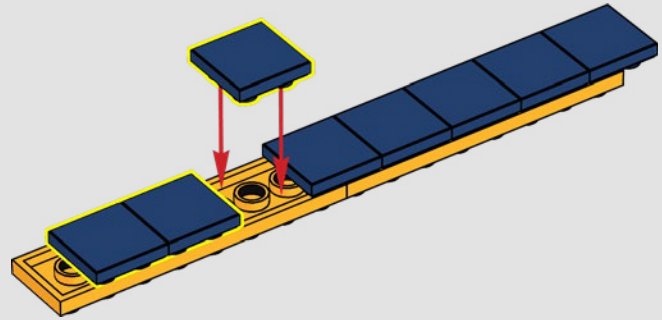

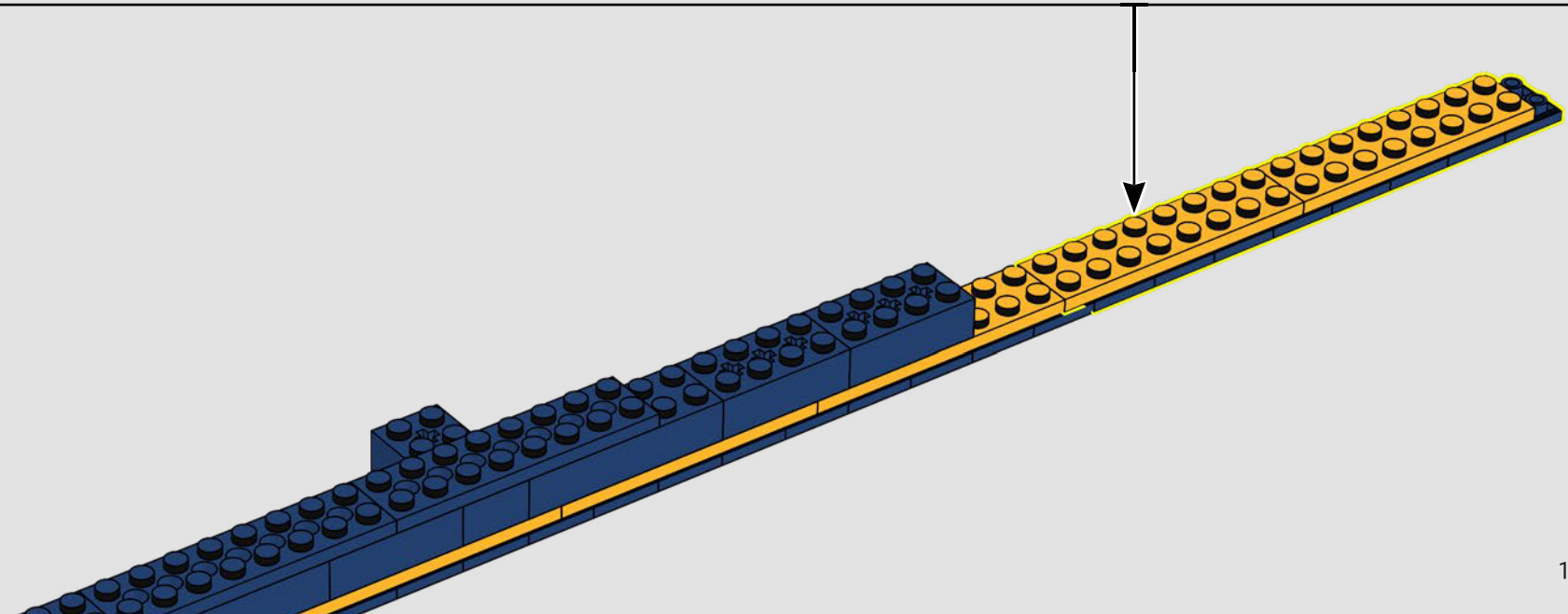

229

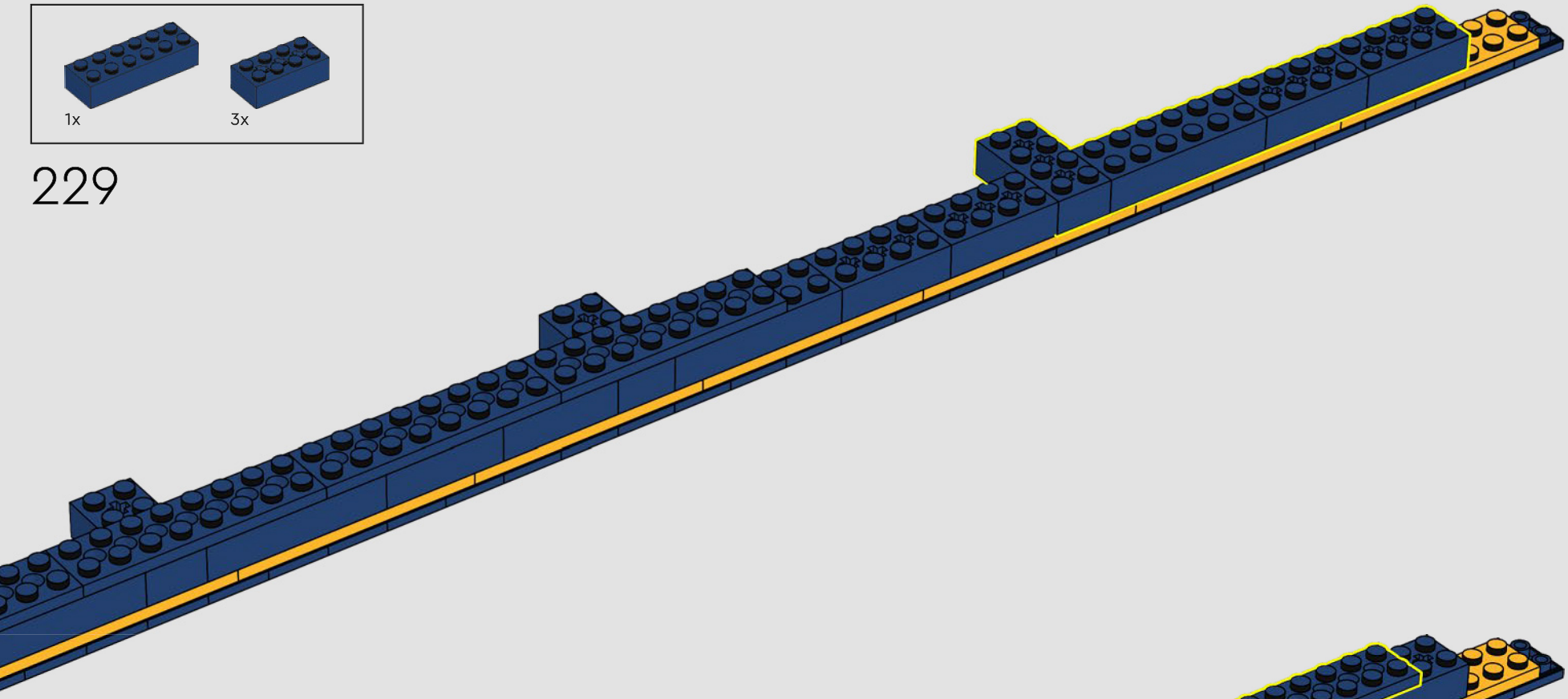

230

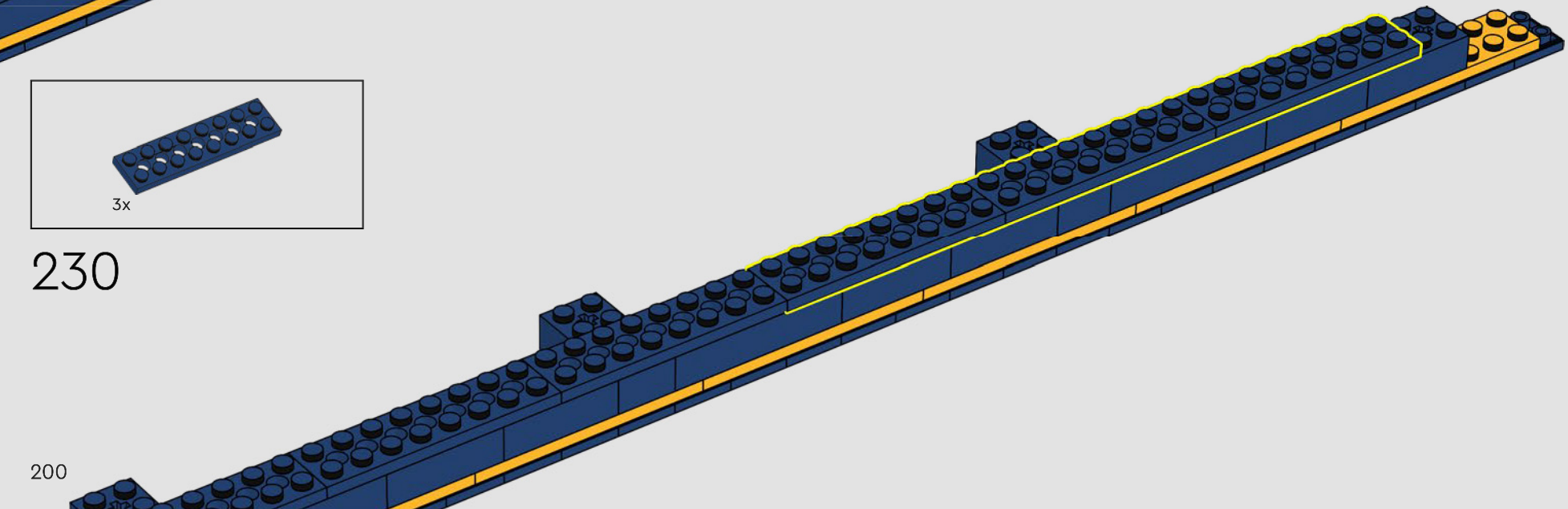

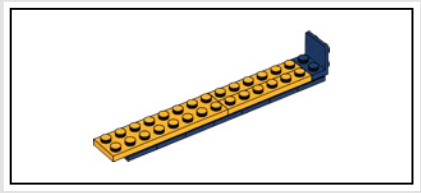

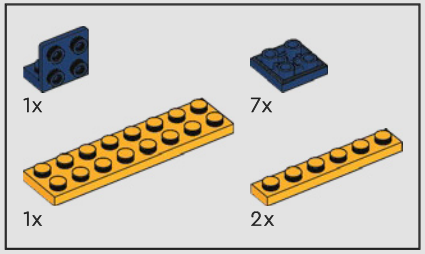

231

1

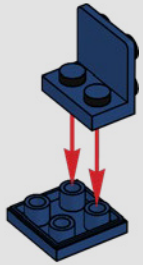

2

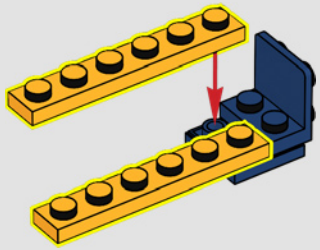

3

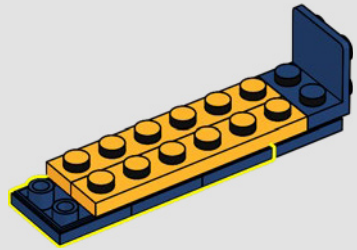

4

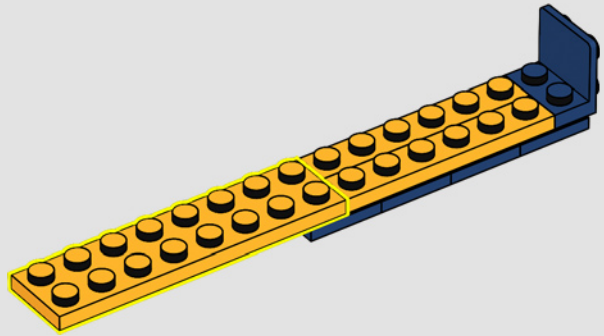

5

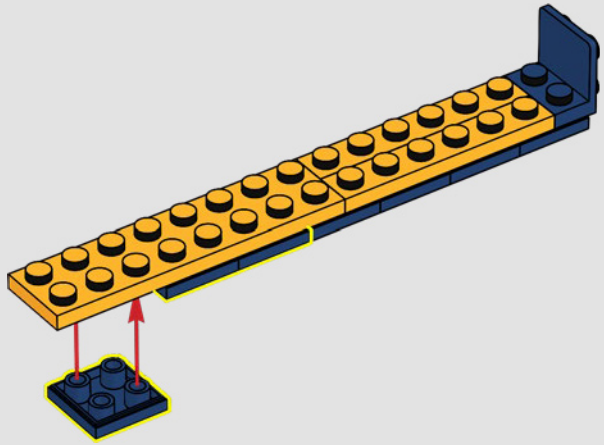

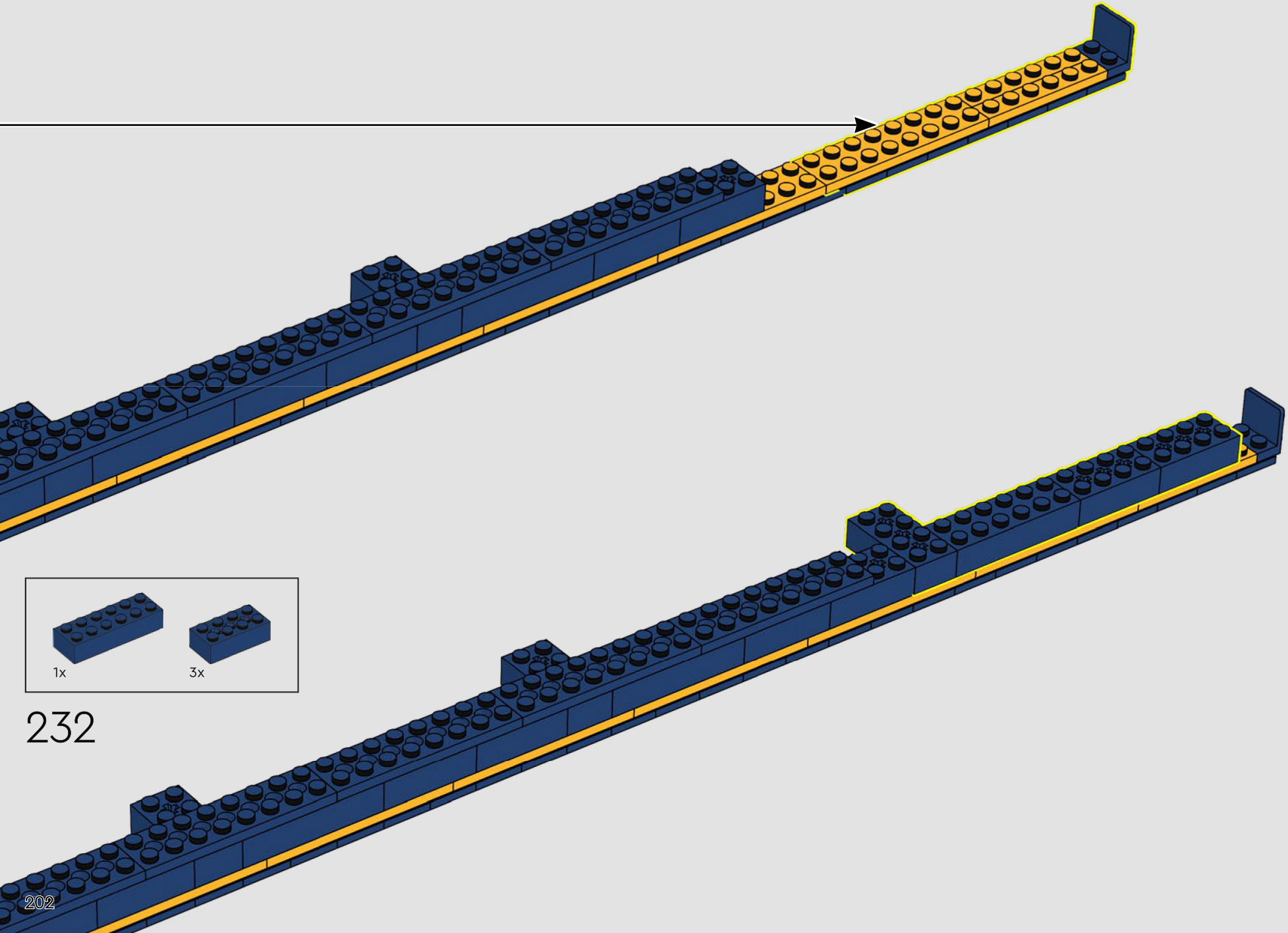

232

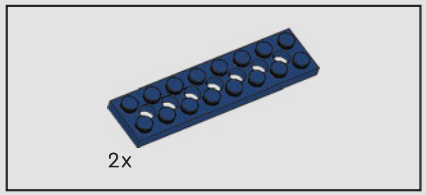

233

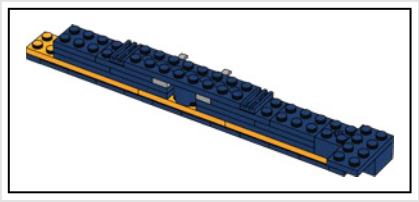

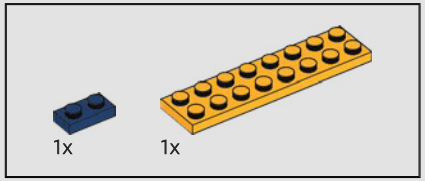

234

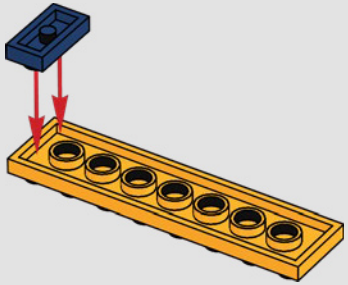

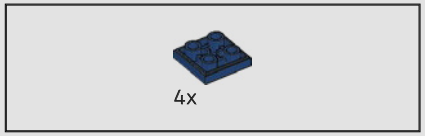

235

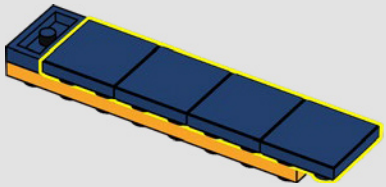

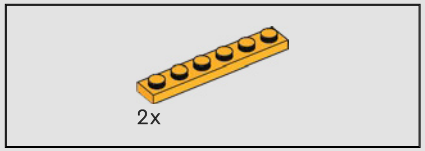

236

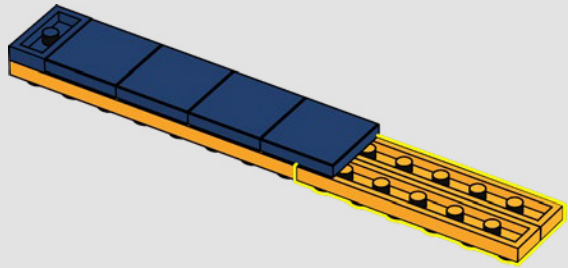

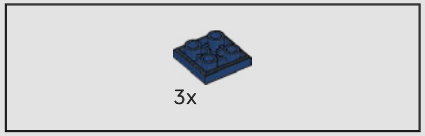

237

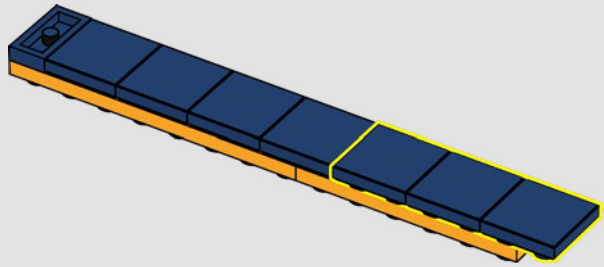

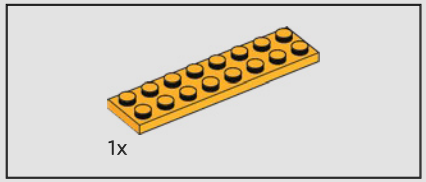

238

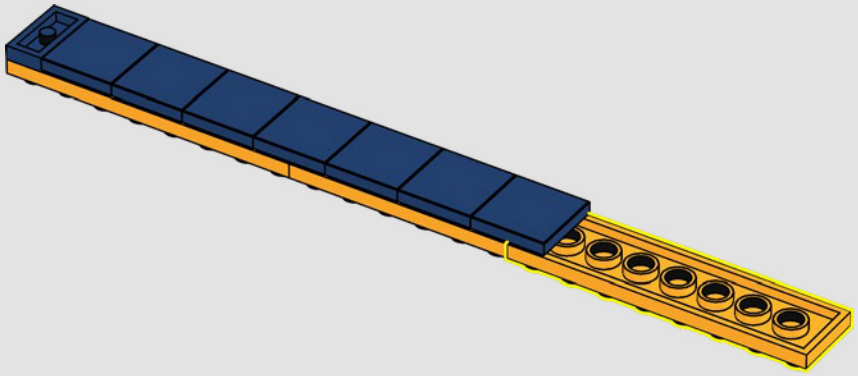

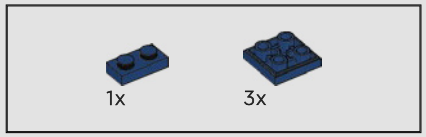

239

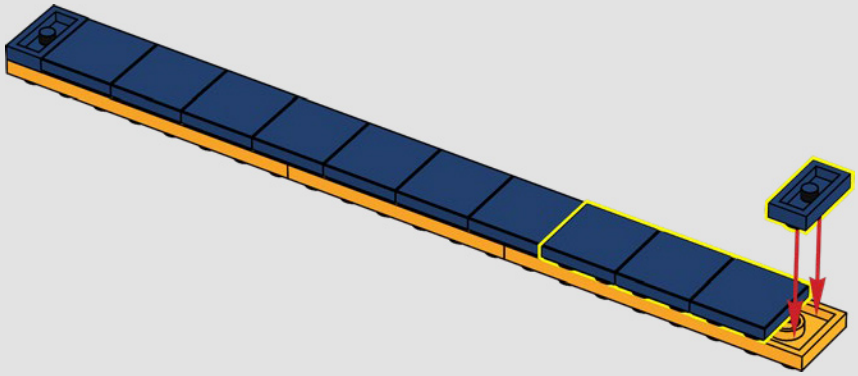

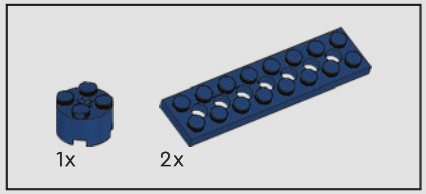

240

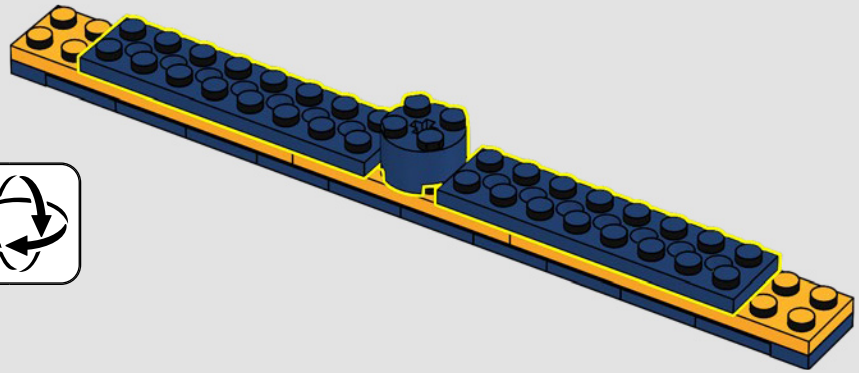

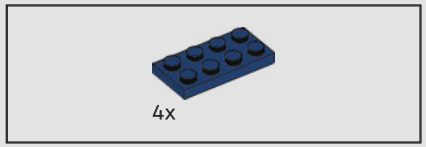

241

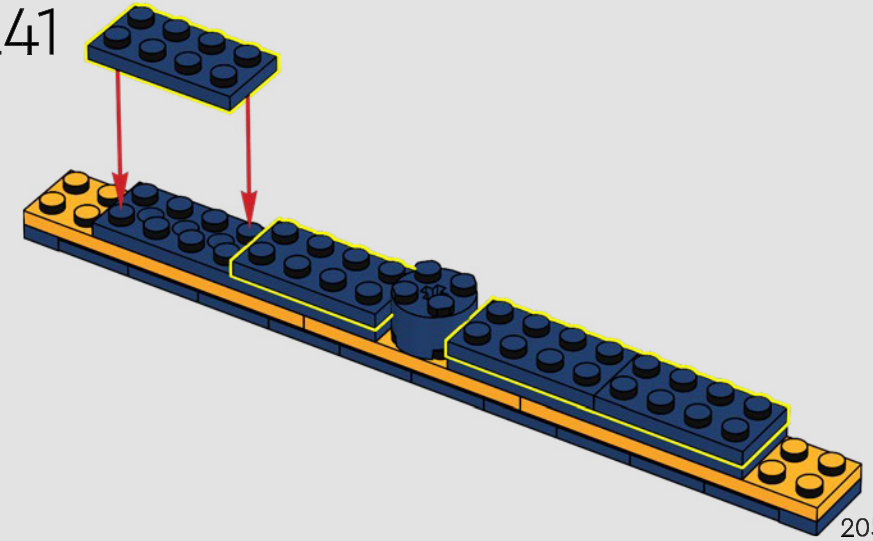

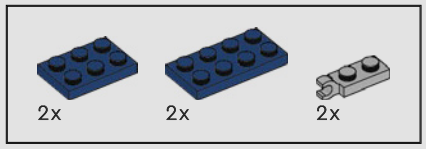

242

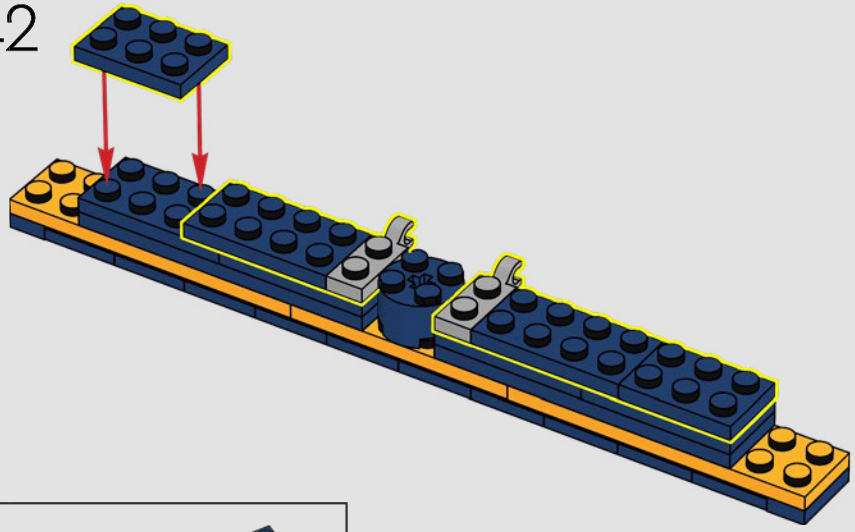

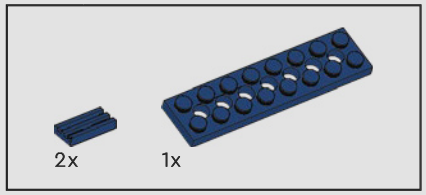

243

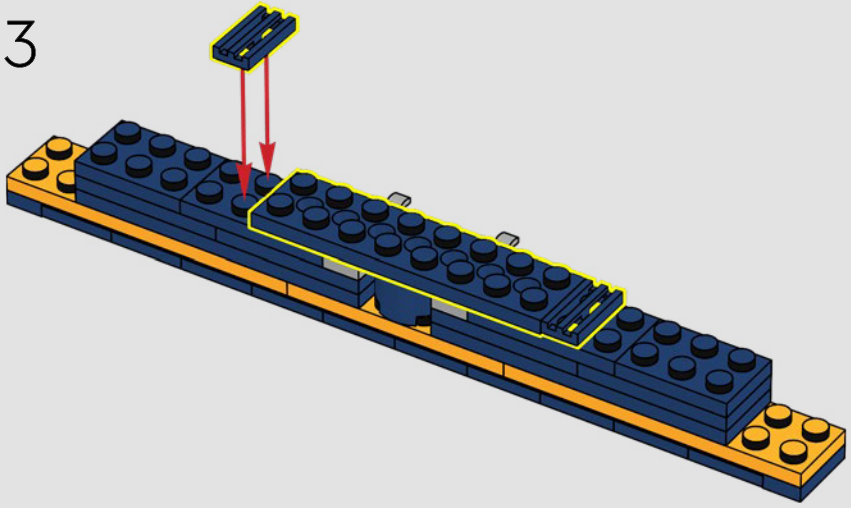

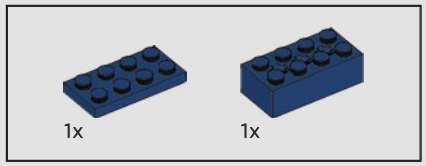

244

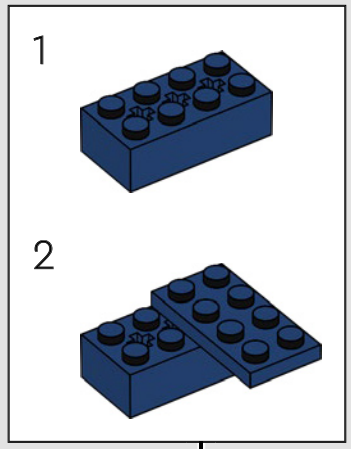

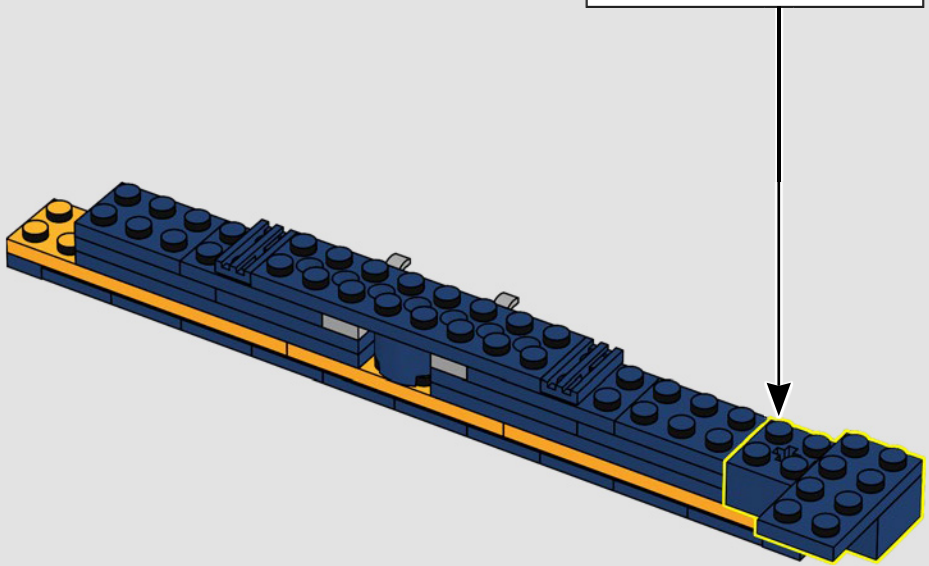

245

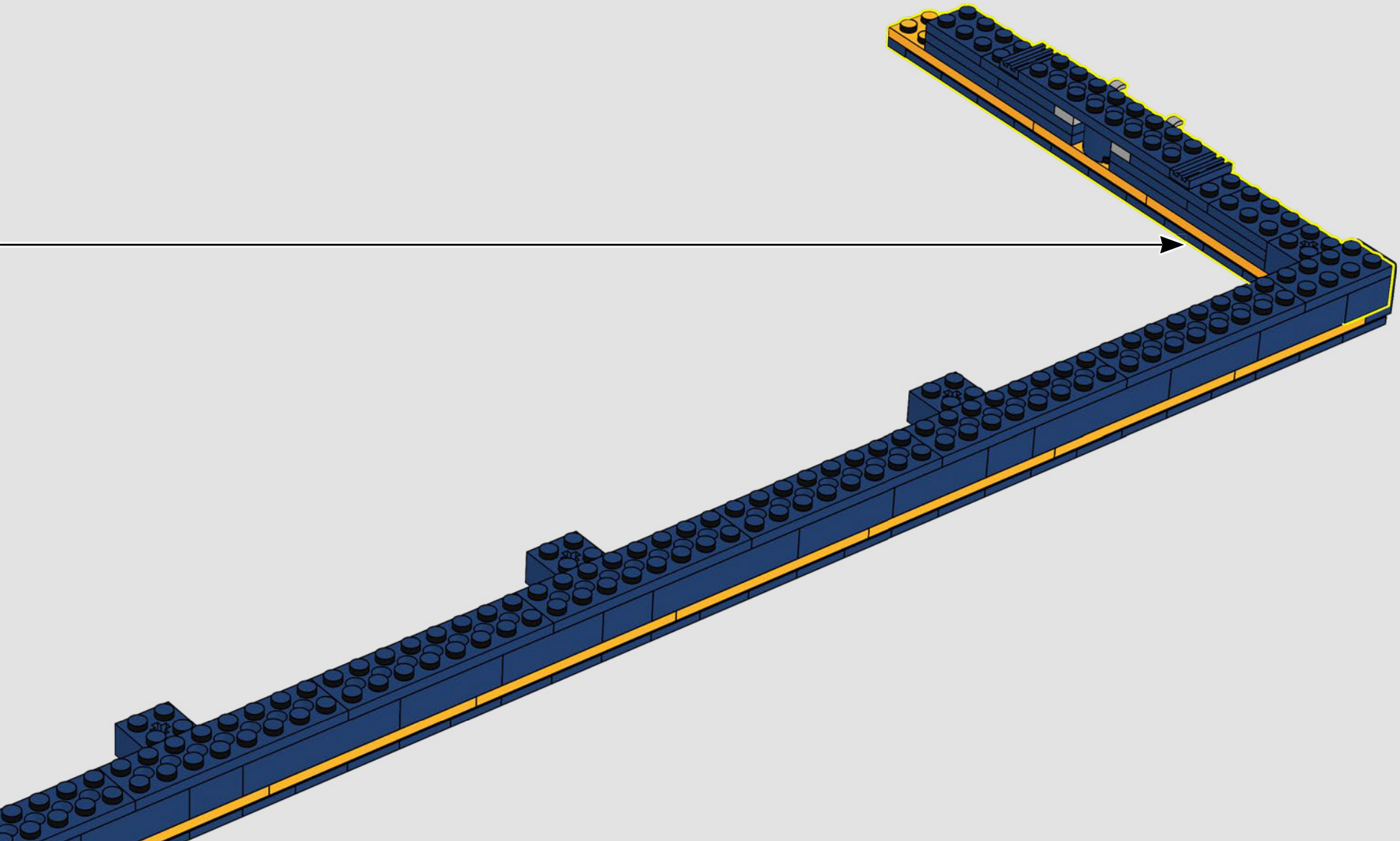

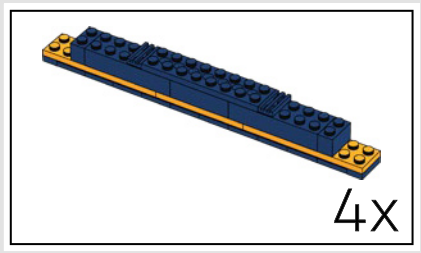

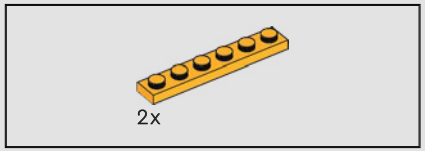

246

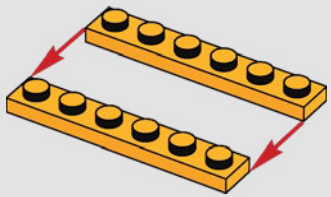

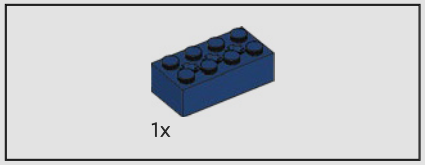

247

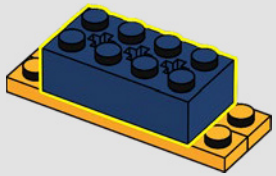

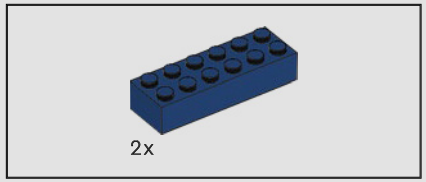

248

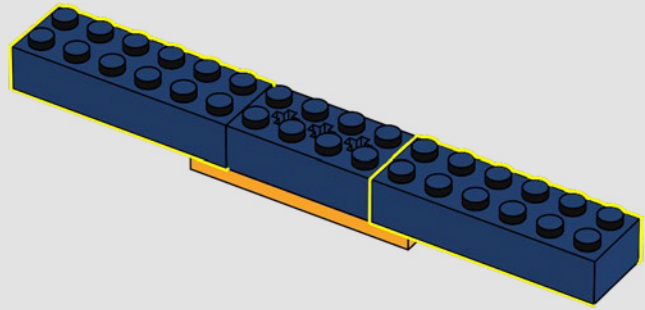

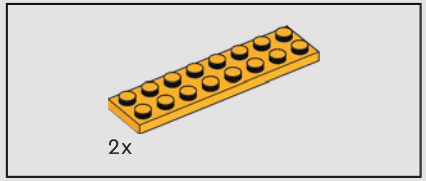

249

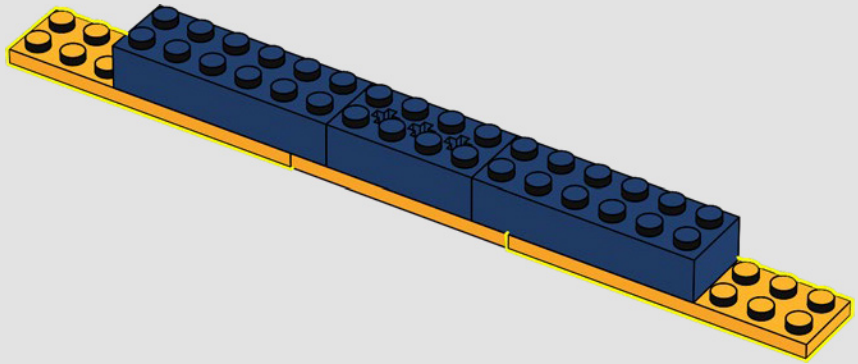

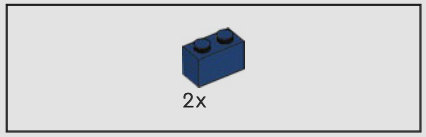

250

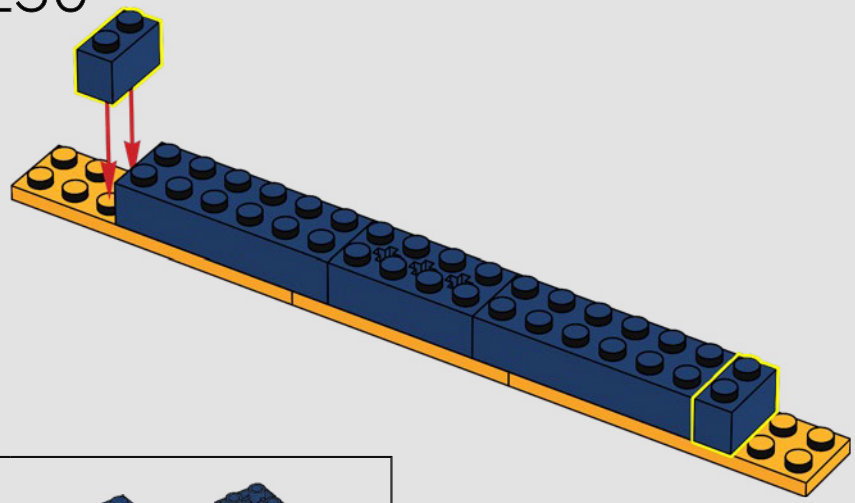

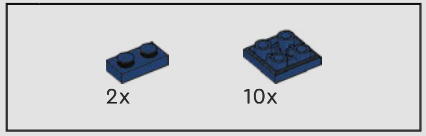

251

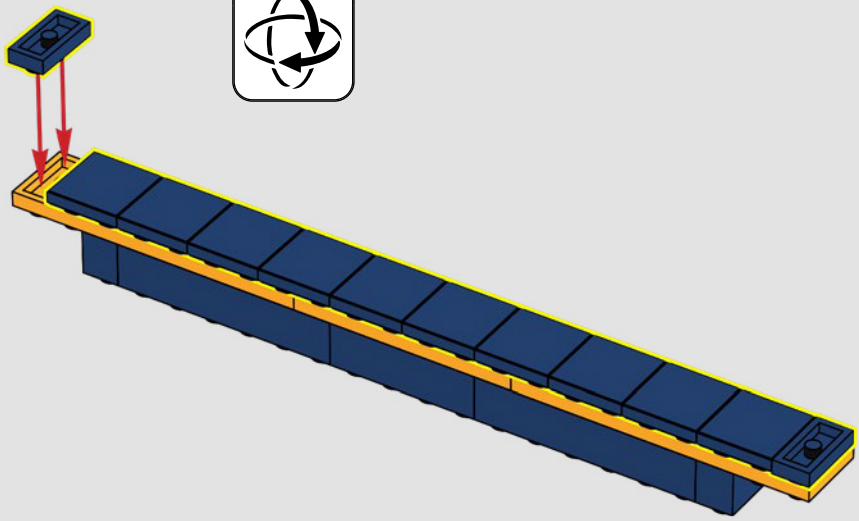

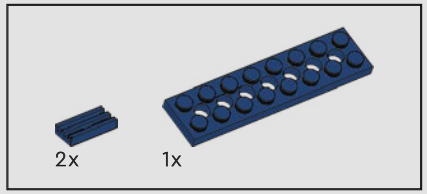

252

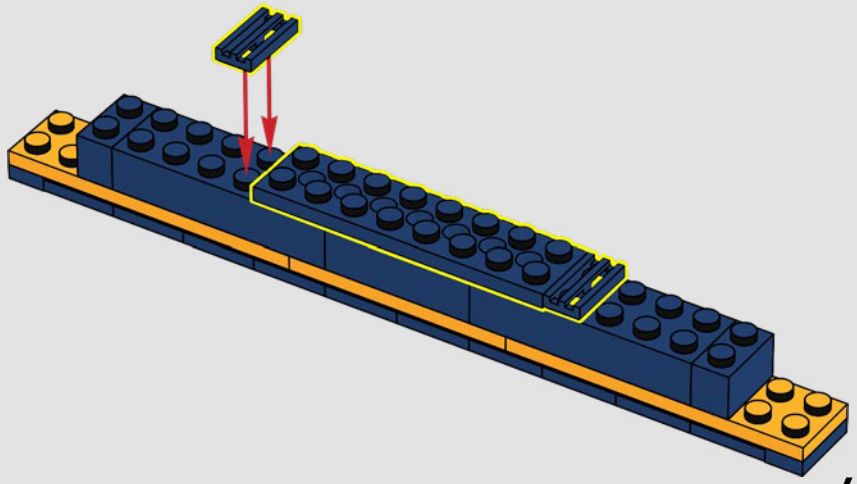

4x

253

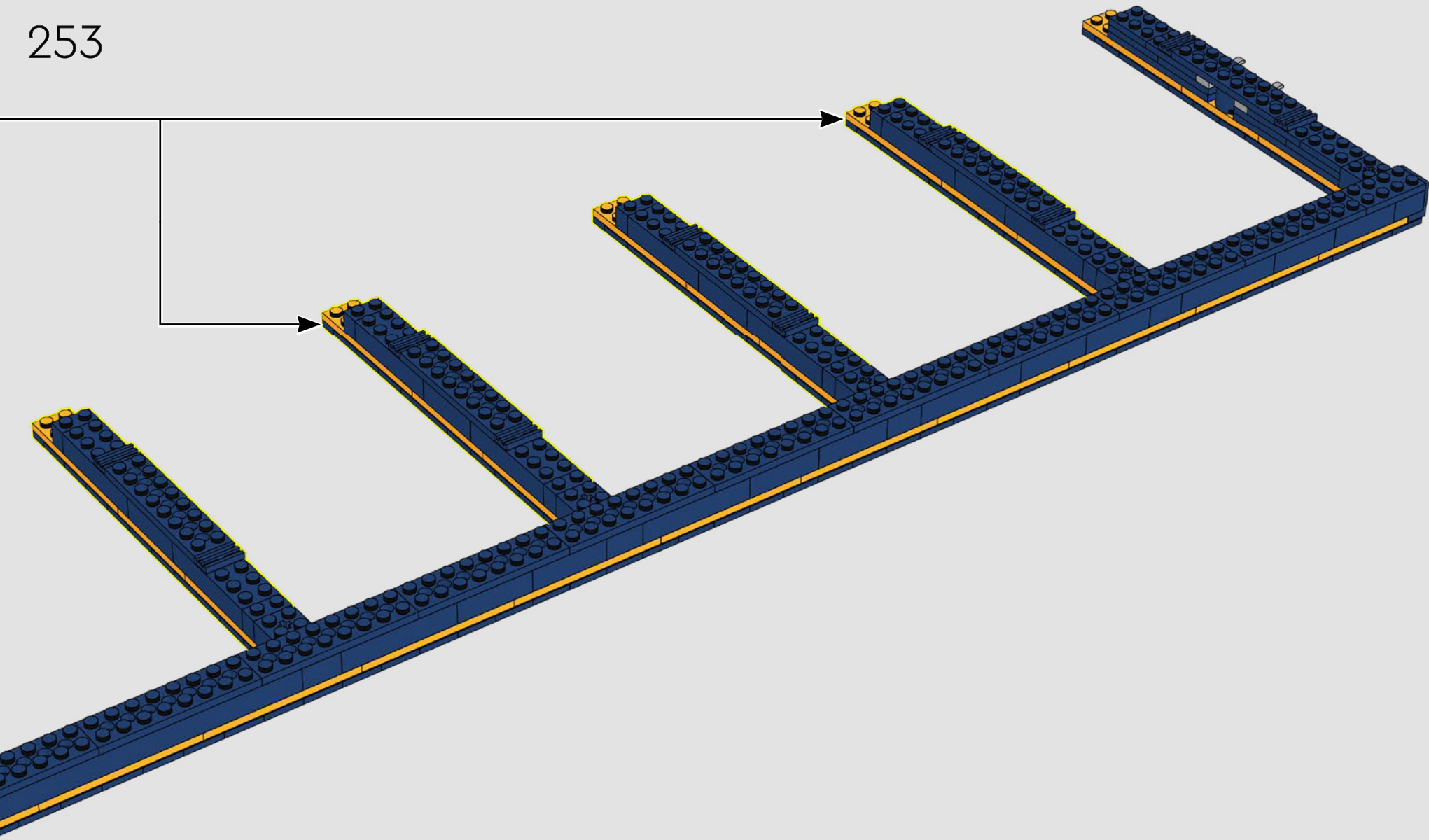

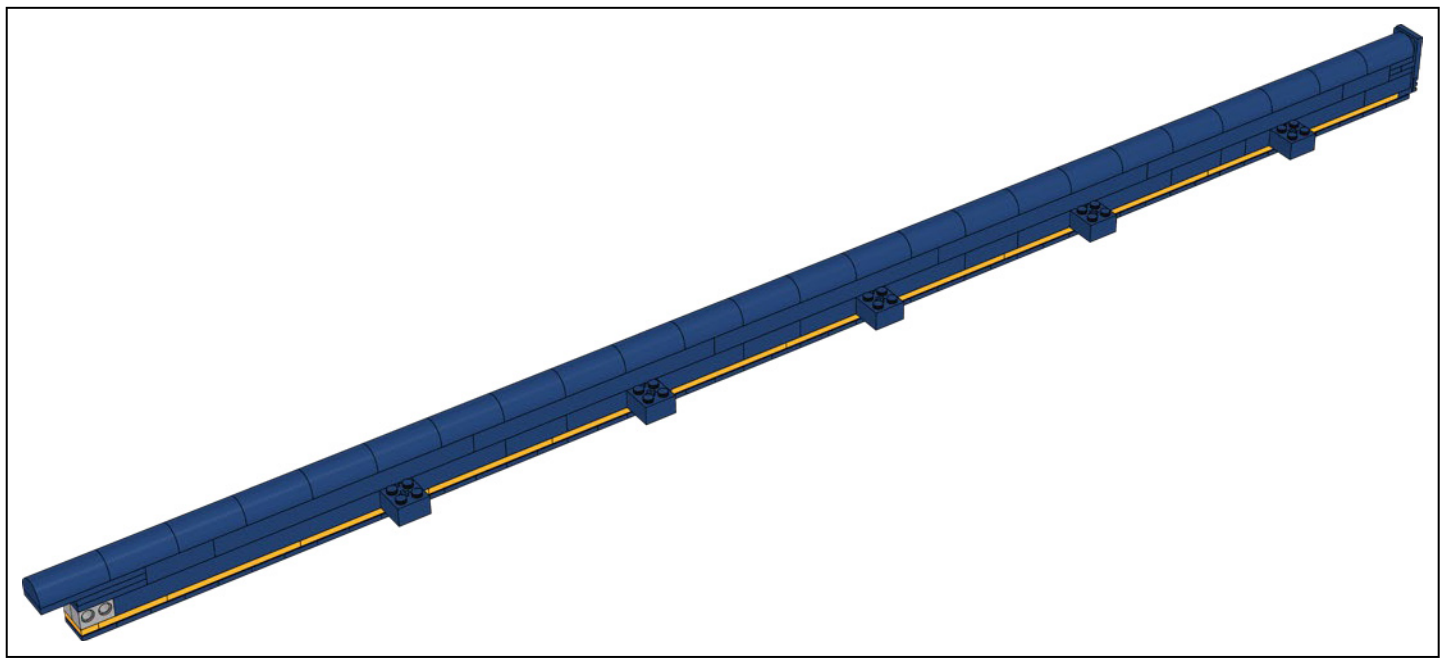

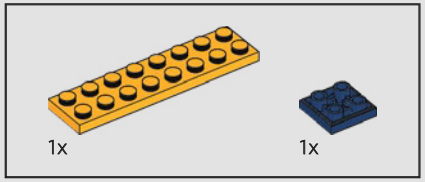

254

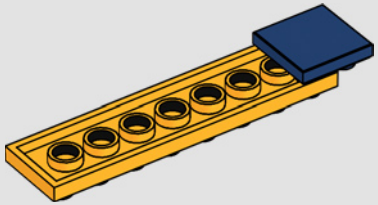

255

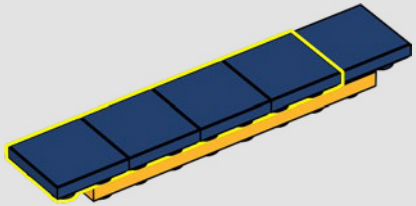

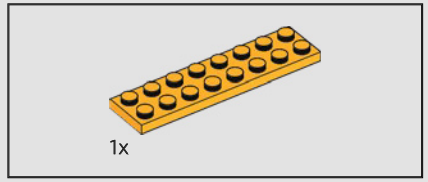

256

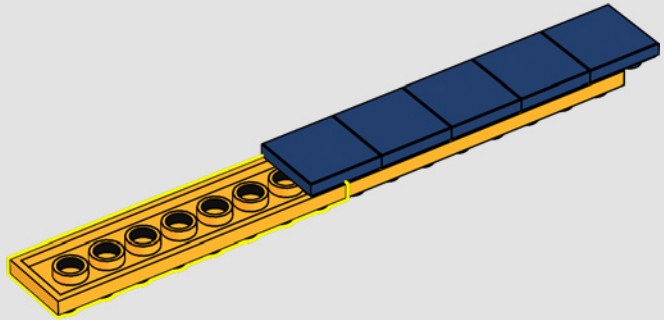

257

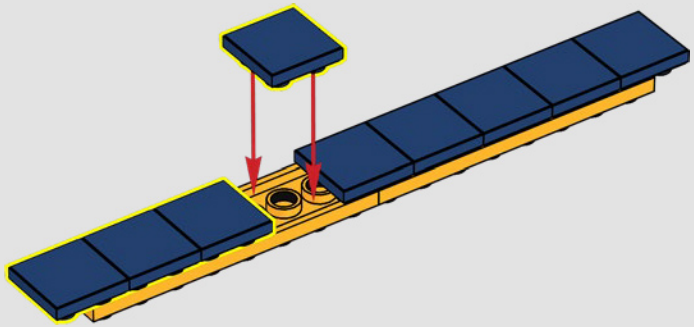

258

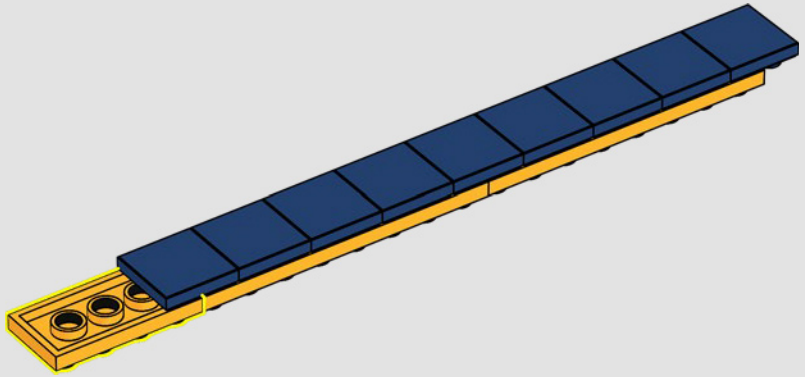

259

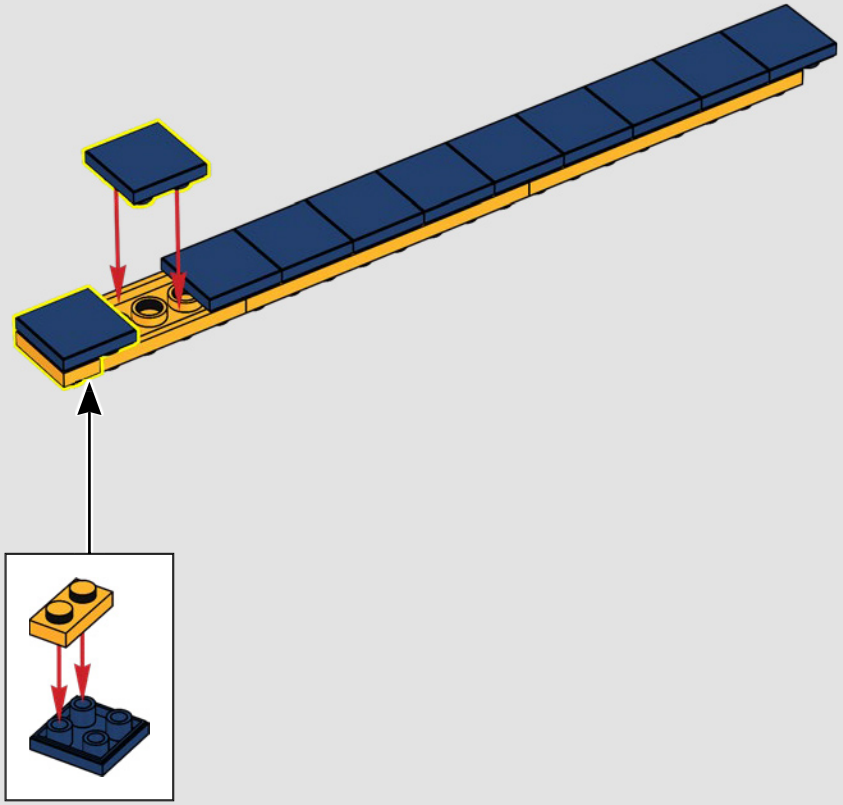

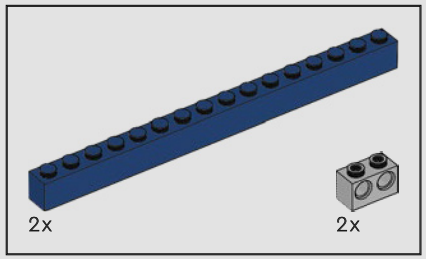

260

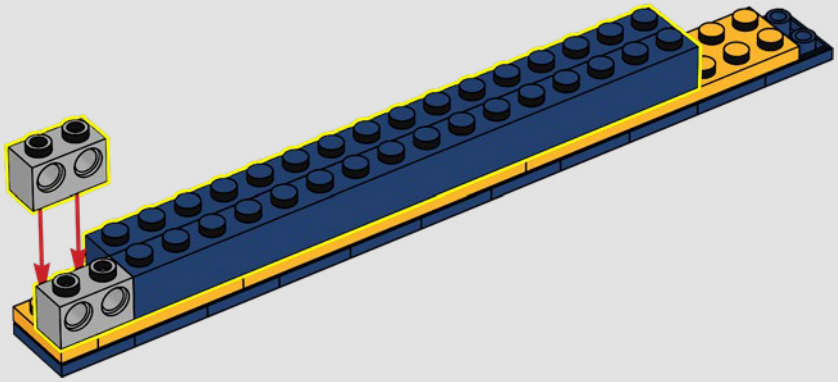

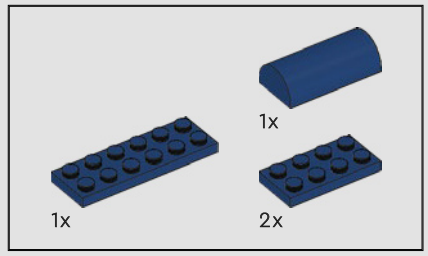

261

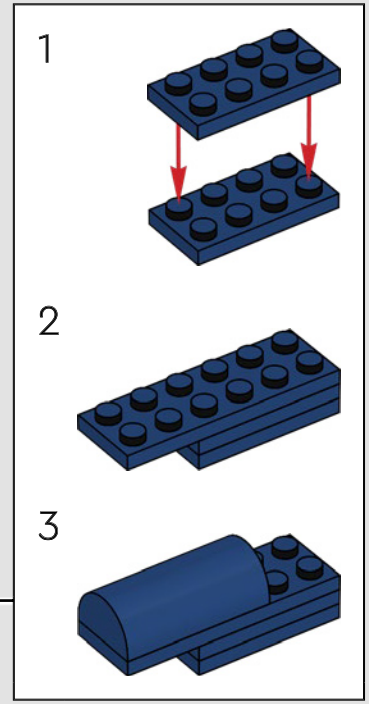

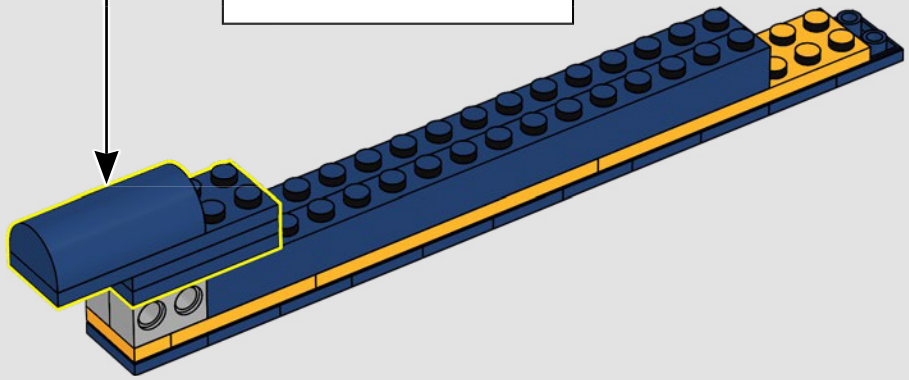

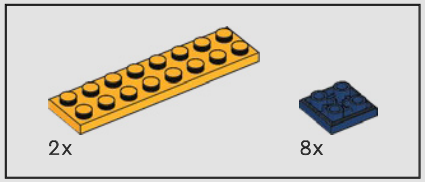

262

1

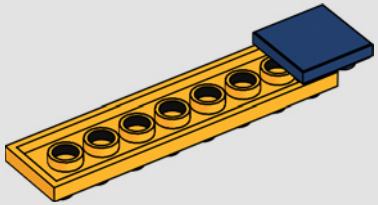

2

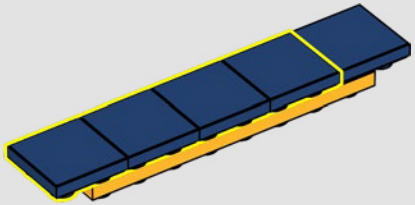

3

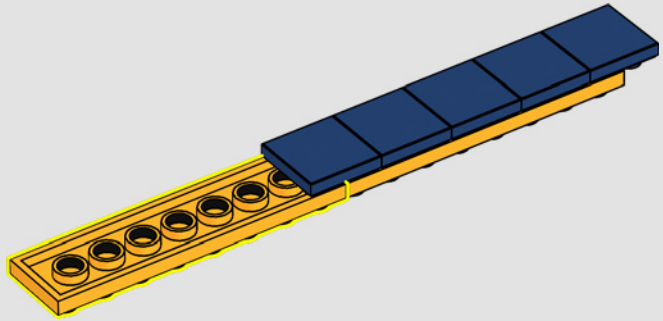

4

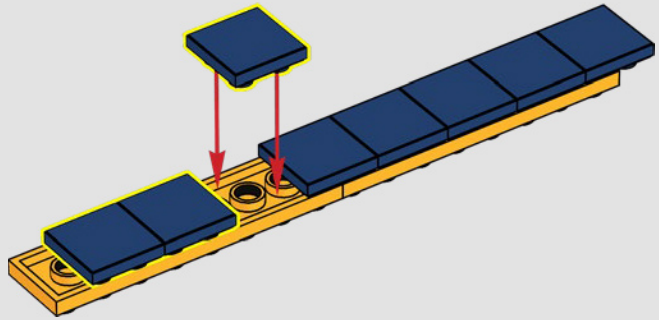

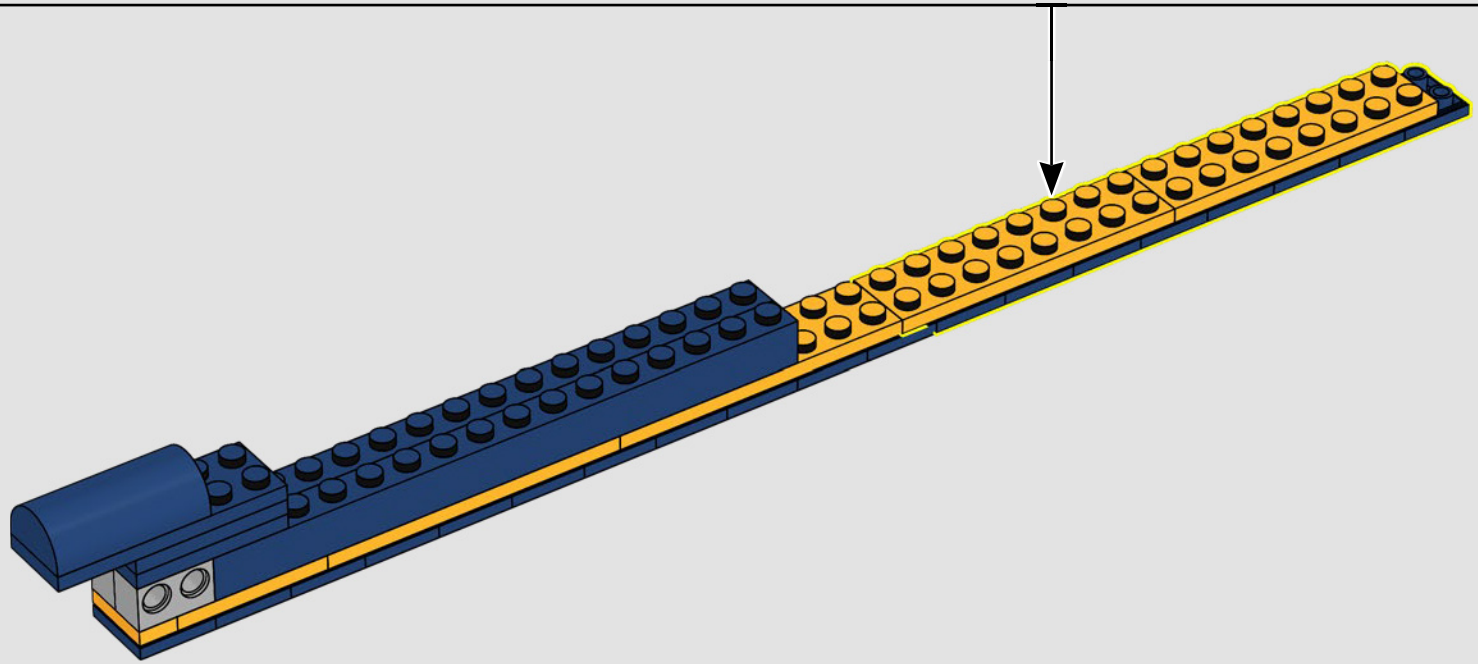

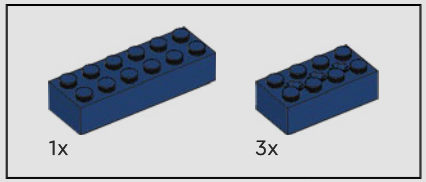

263

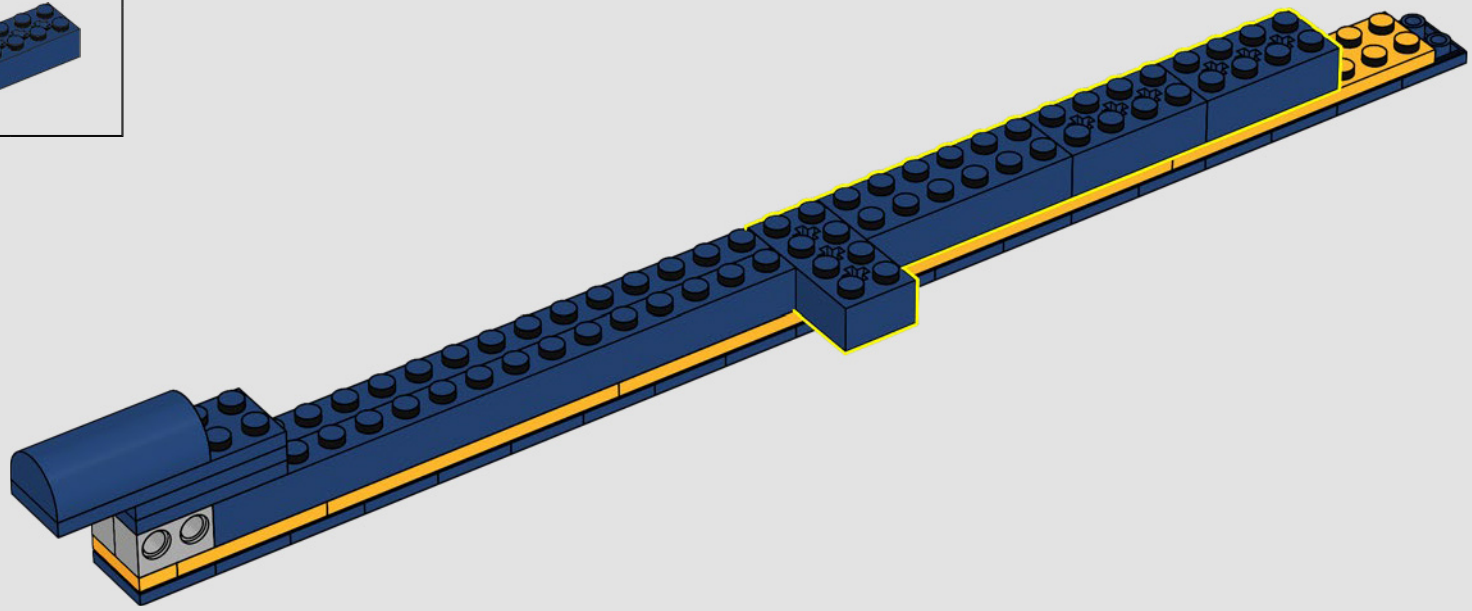

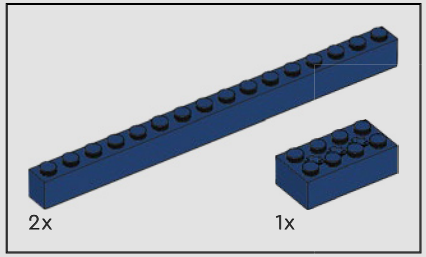

264

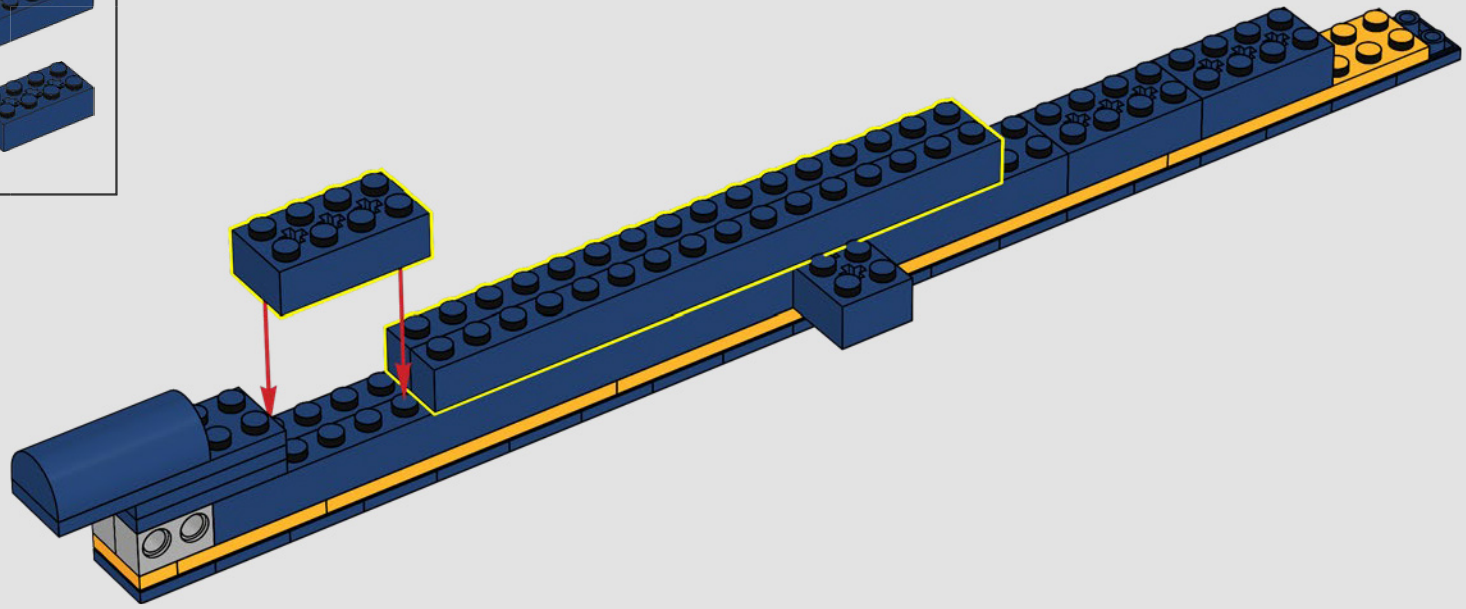

265

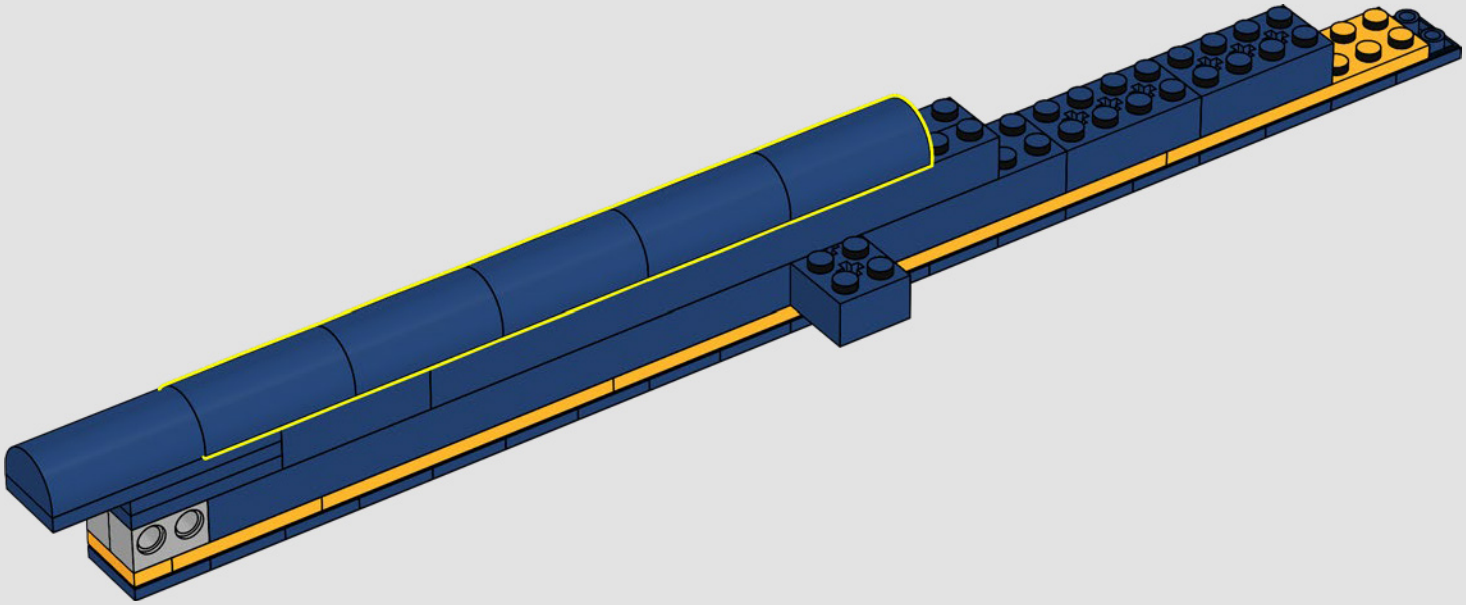

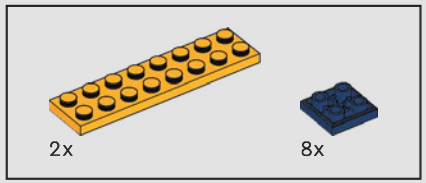

266

1

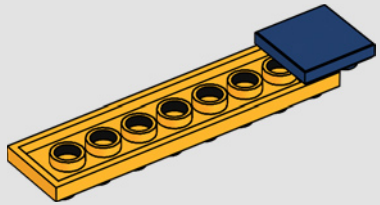

2

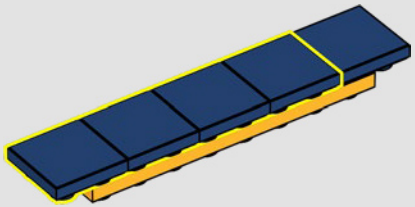

3

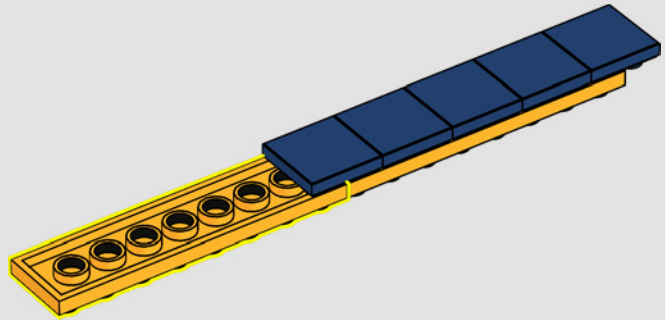

4

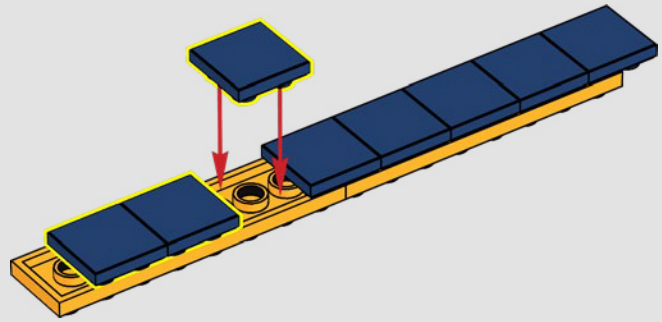

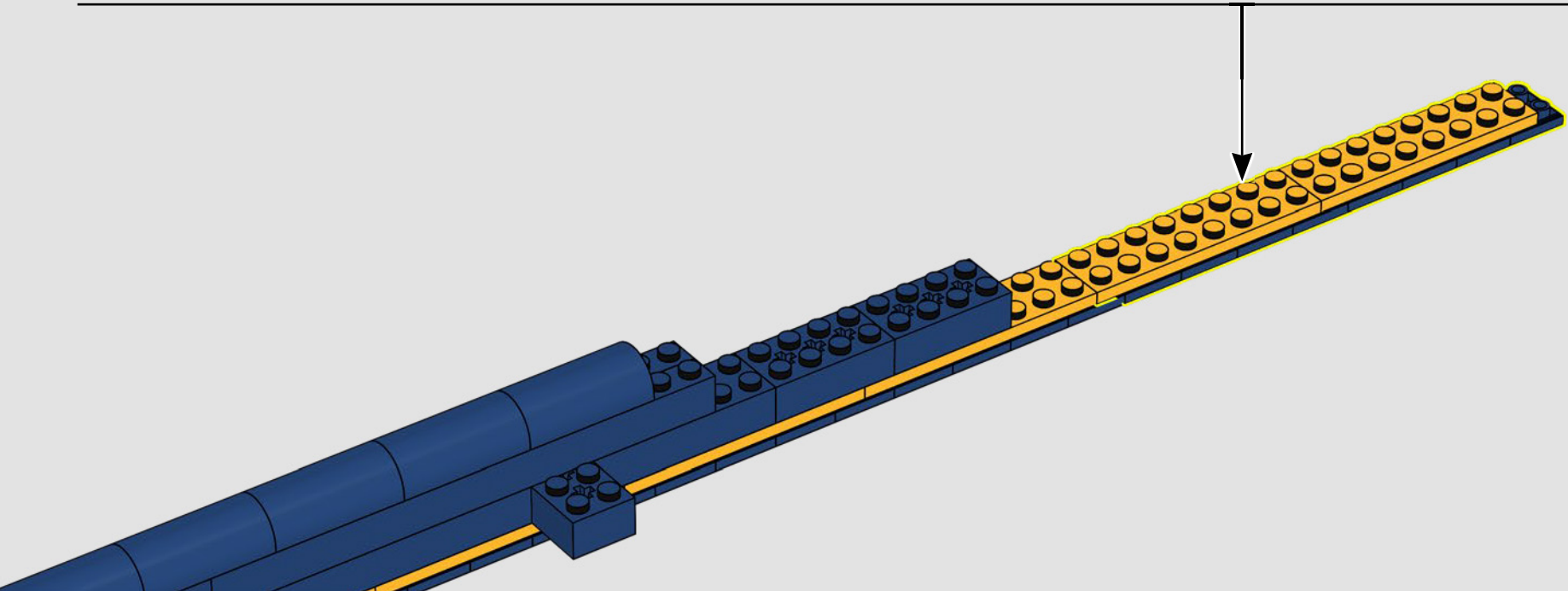

267

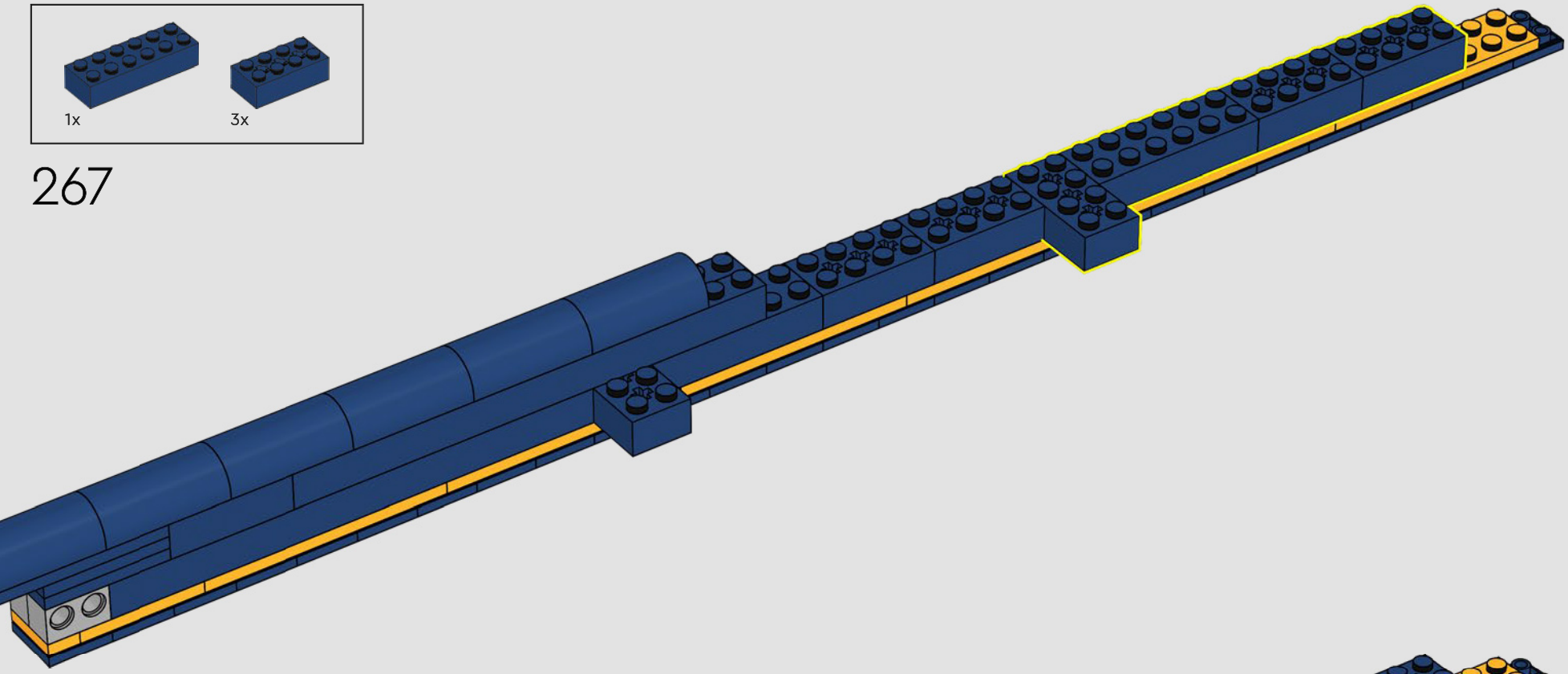

268

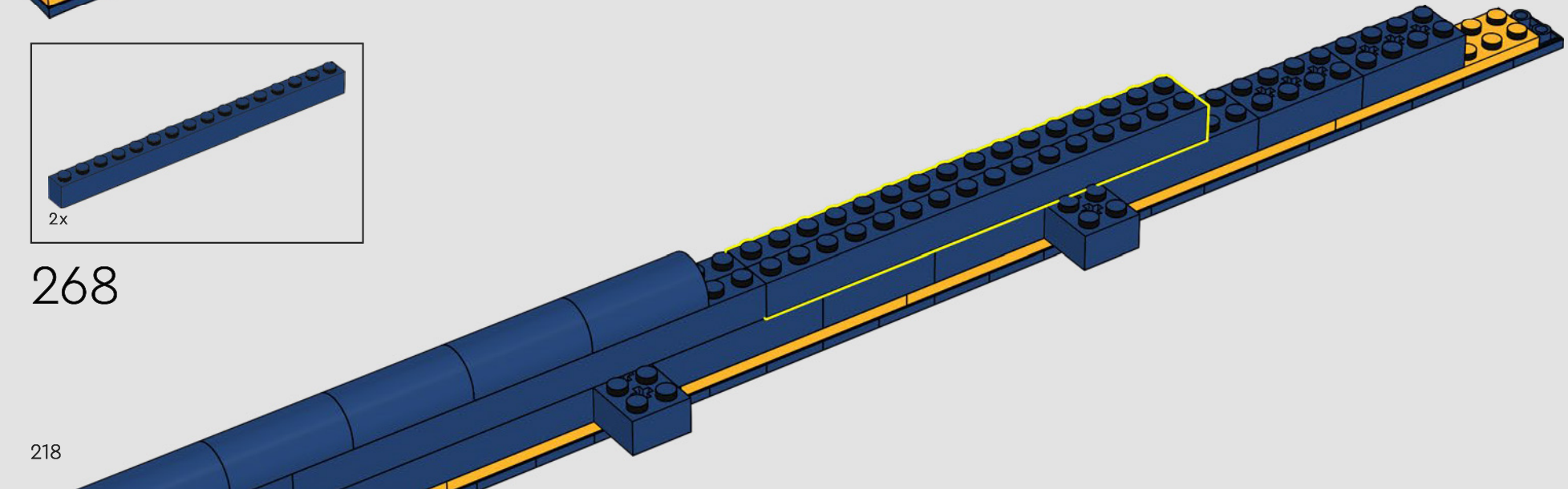

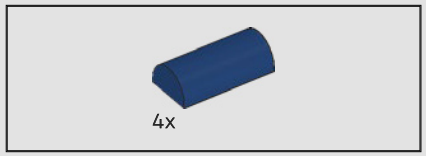

269

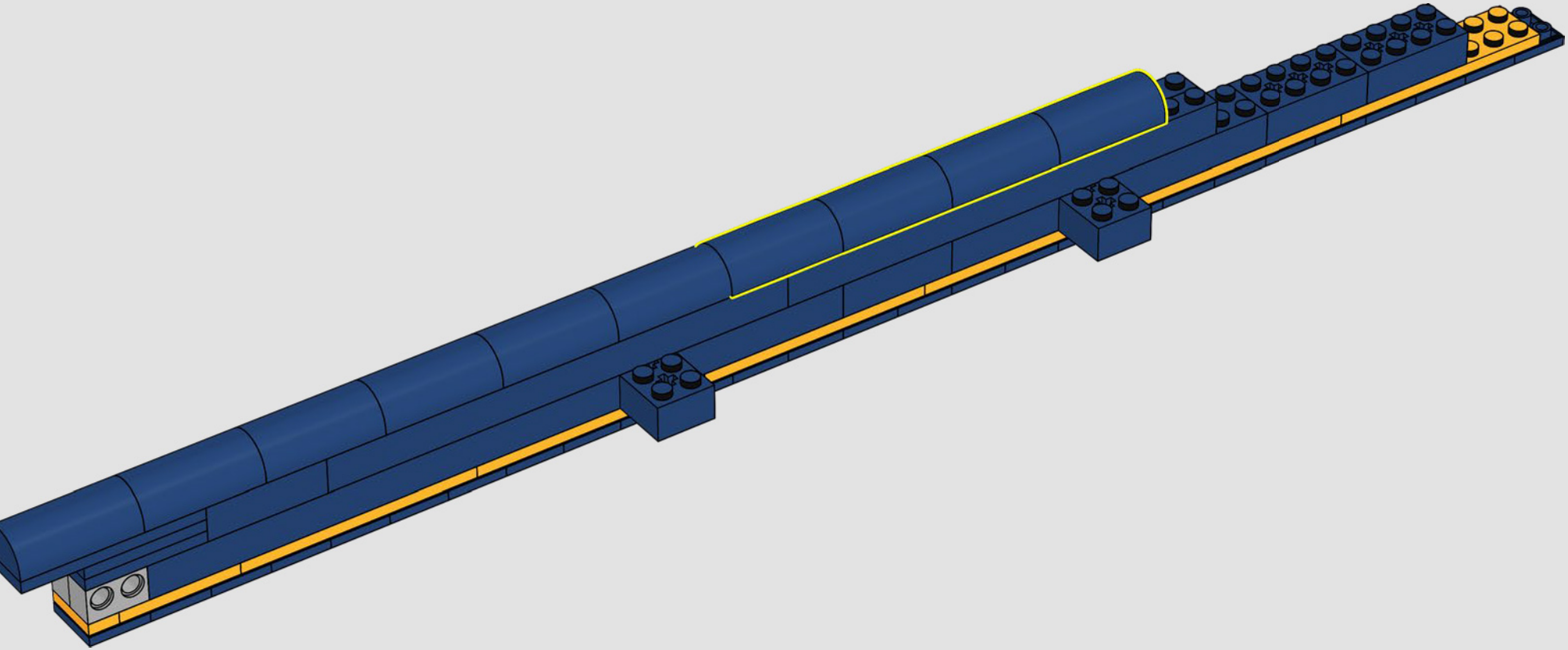

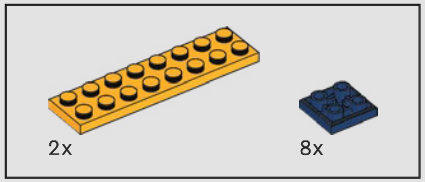

270

1

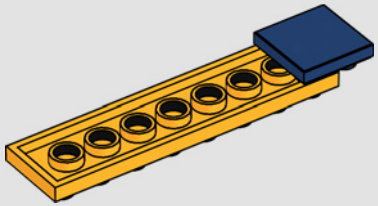

2

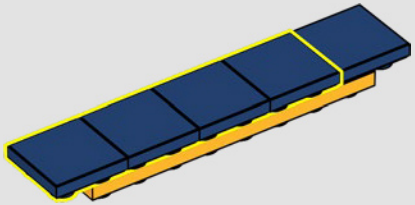

3

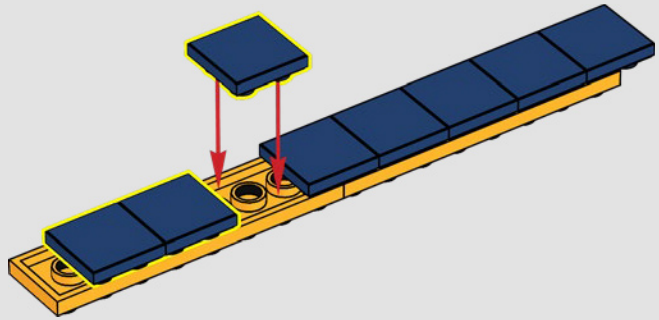

4

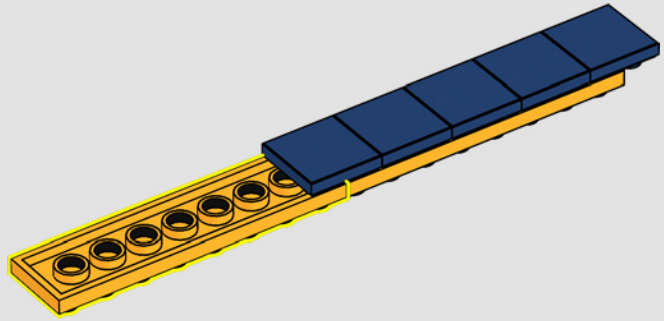

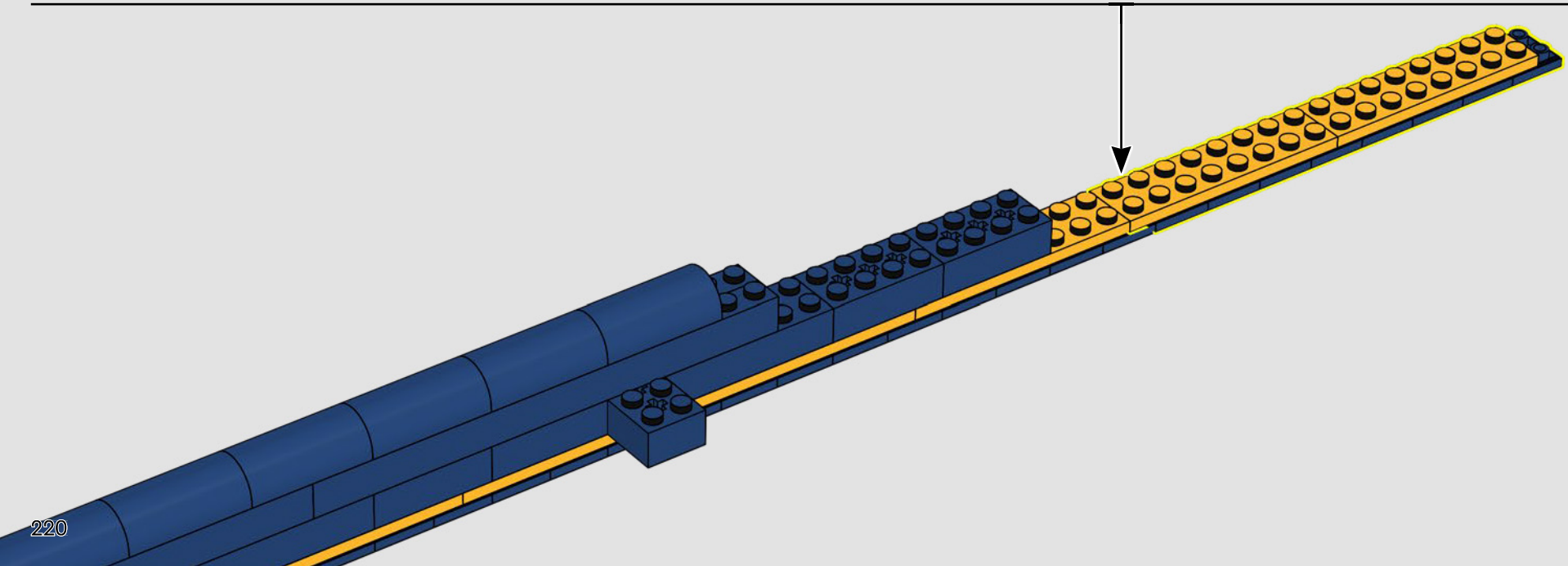

271

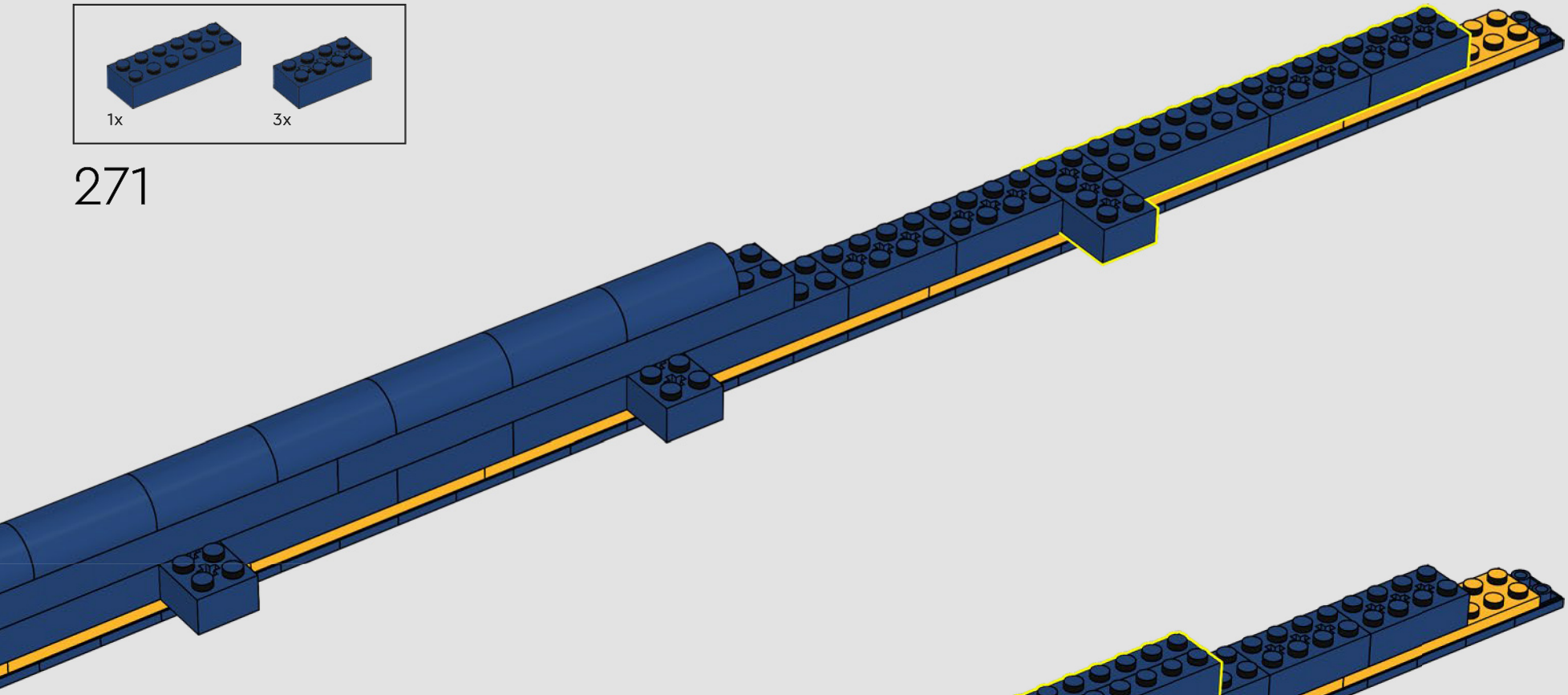

272

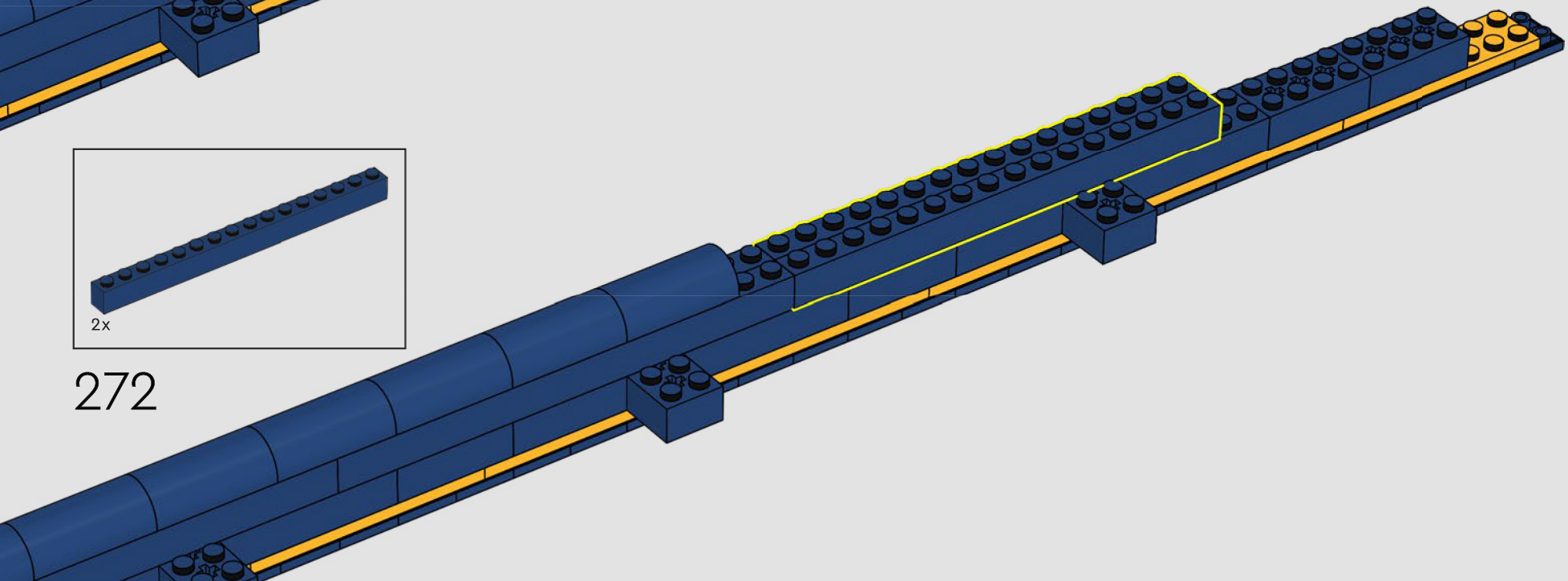

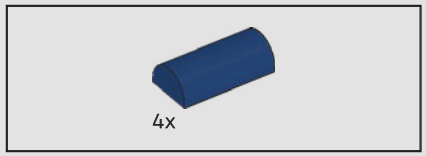

273

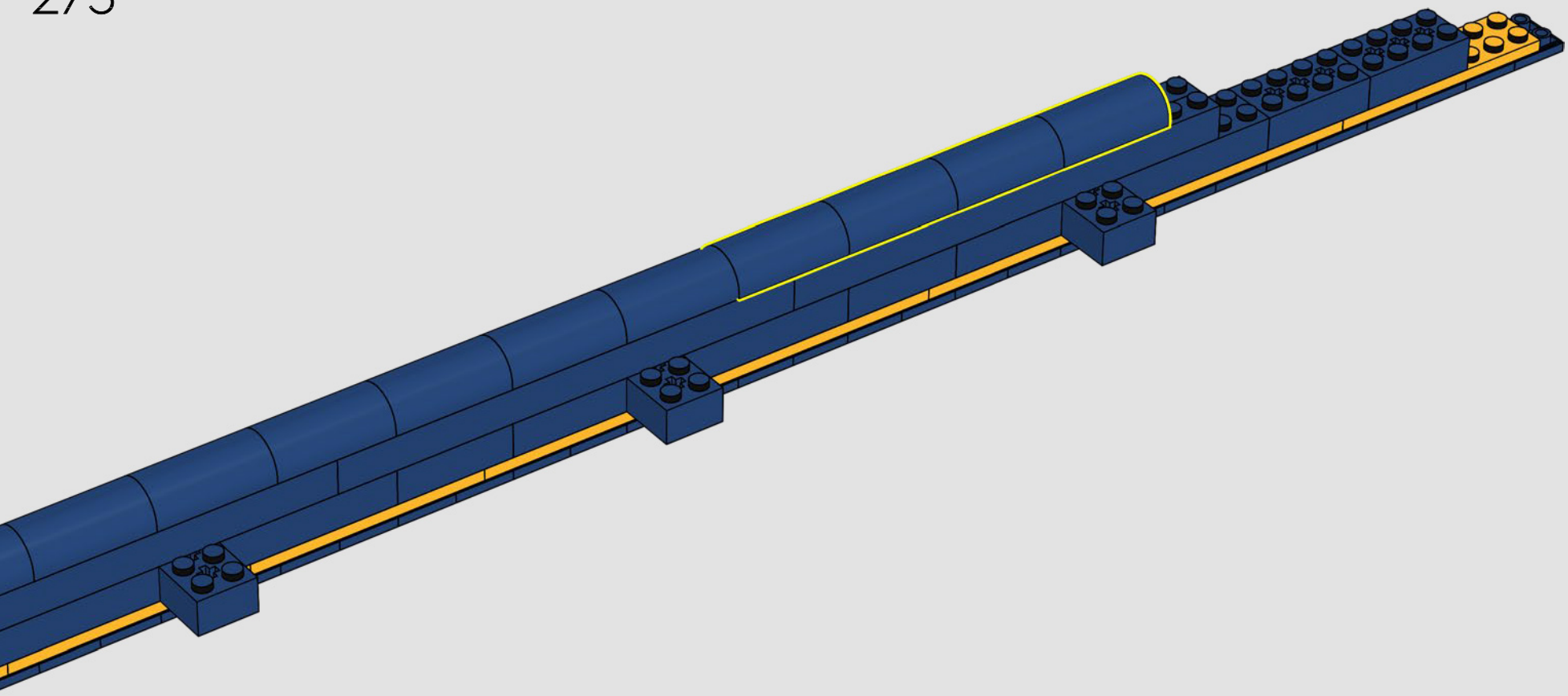

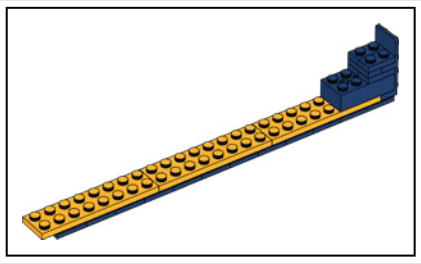

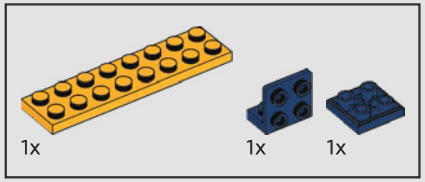

274

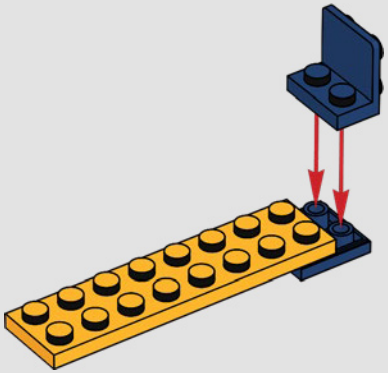

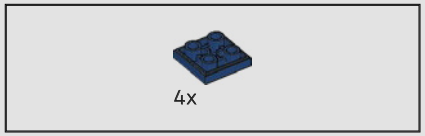

275

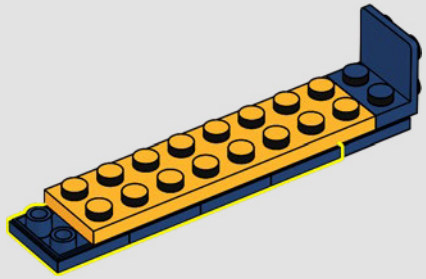

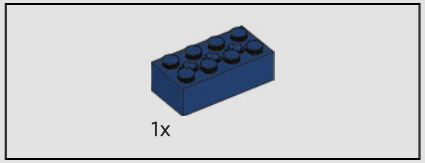

276

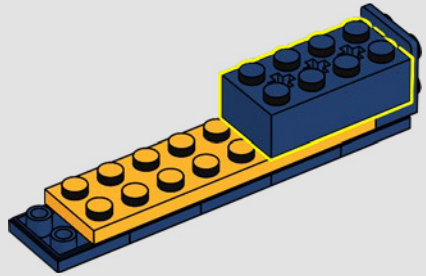

277

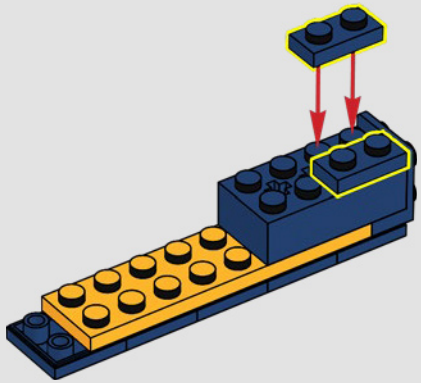

278

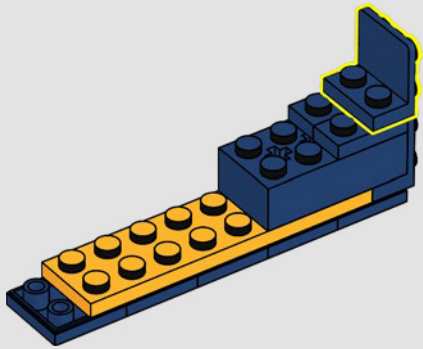

279

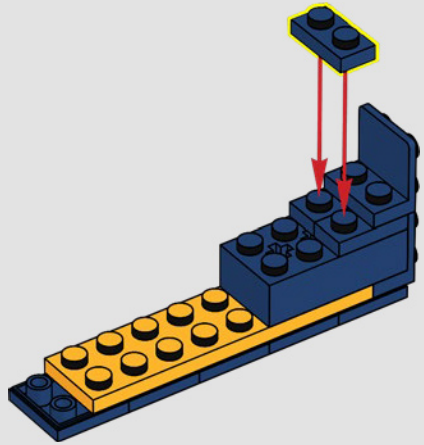

280

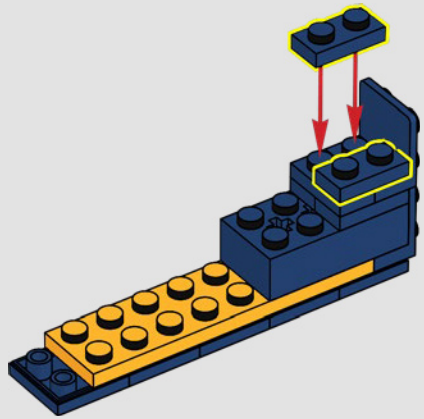

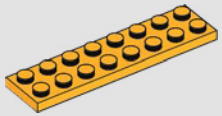

281

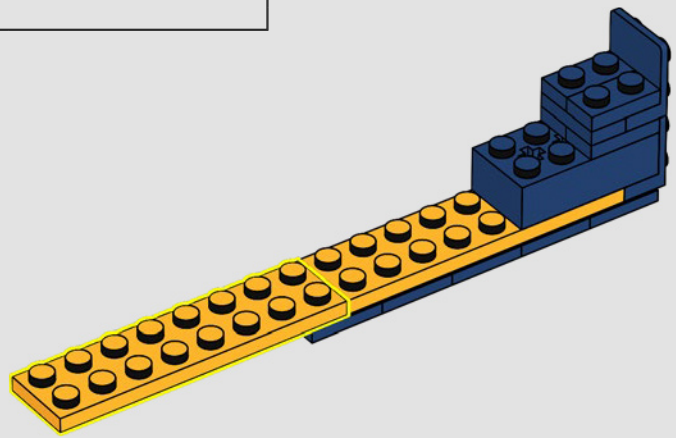

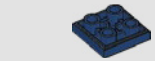

282

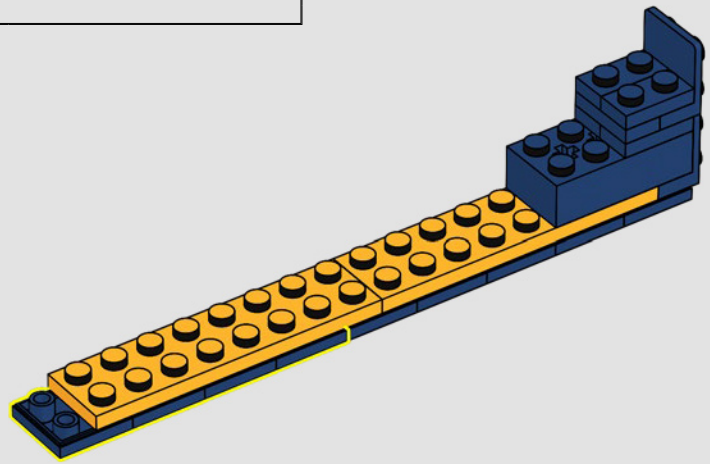

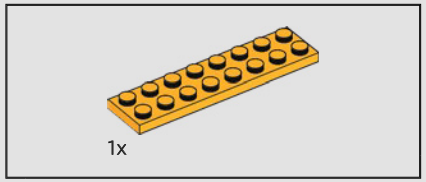

283

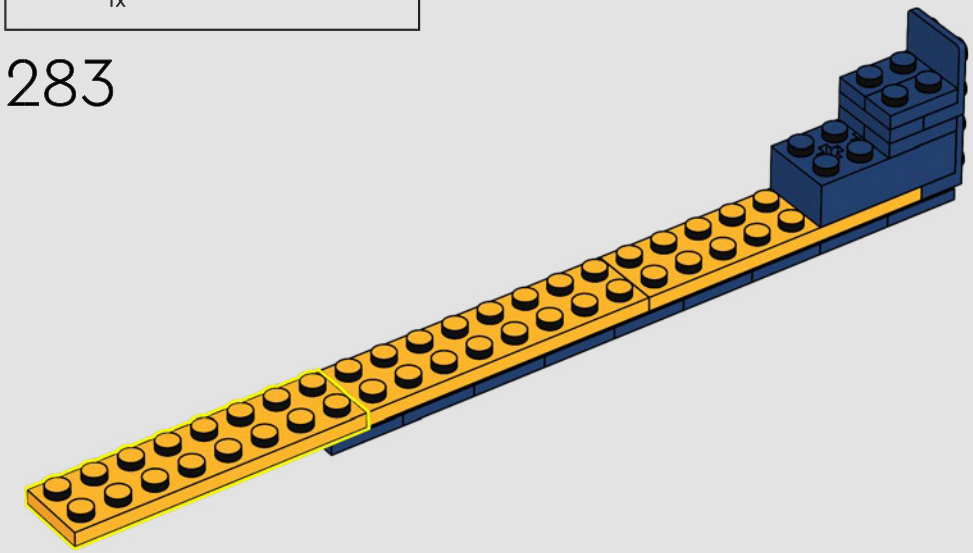

284

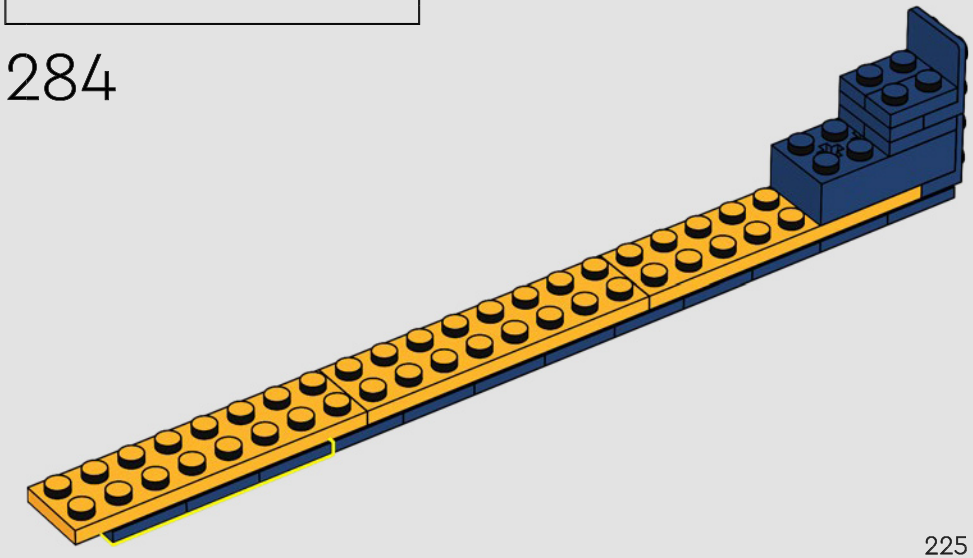

285

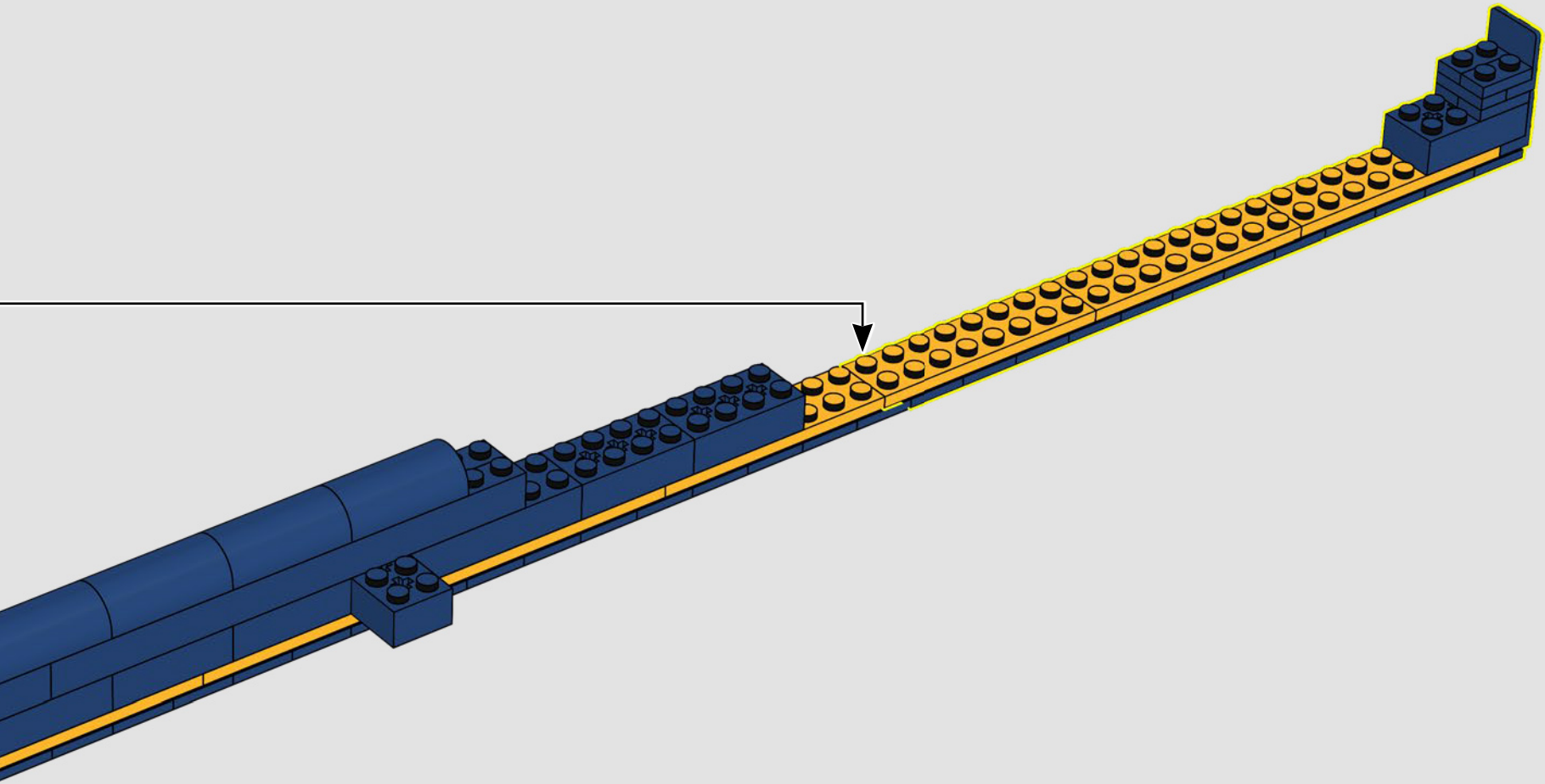

286

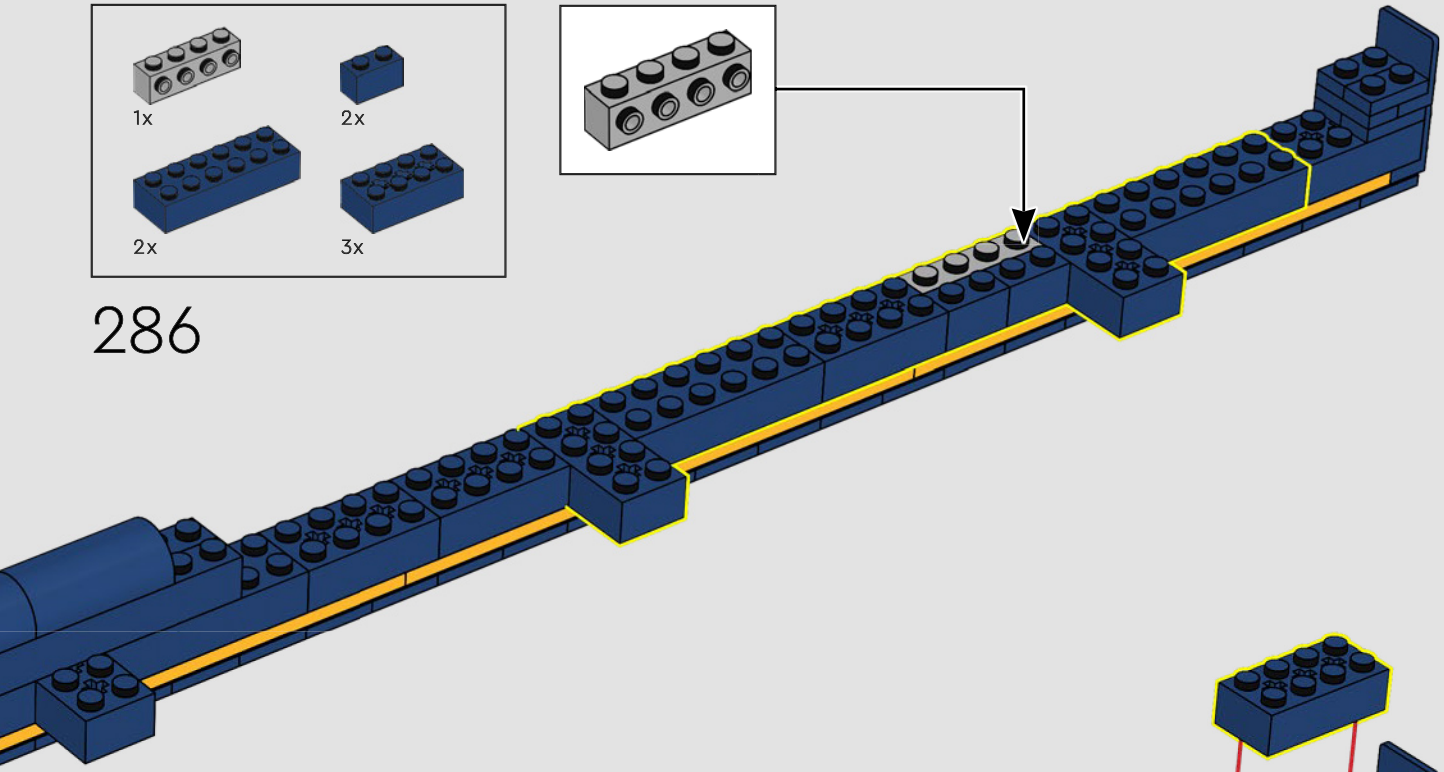

287

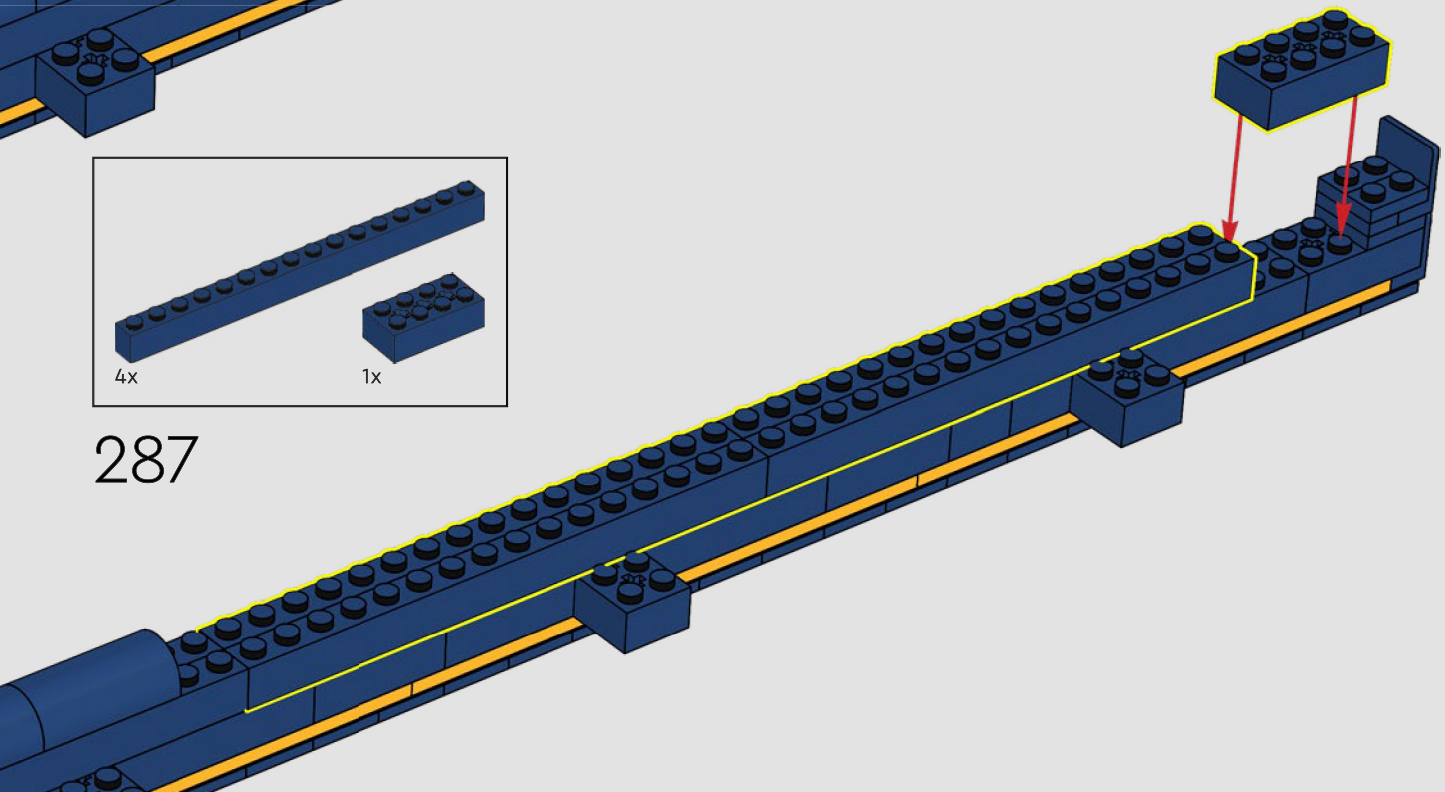

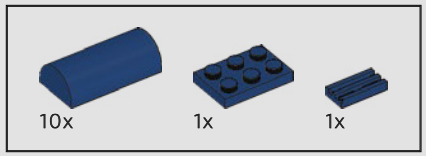

288

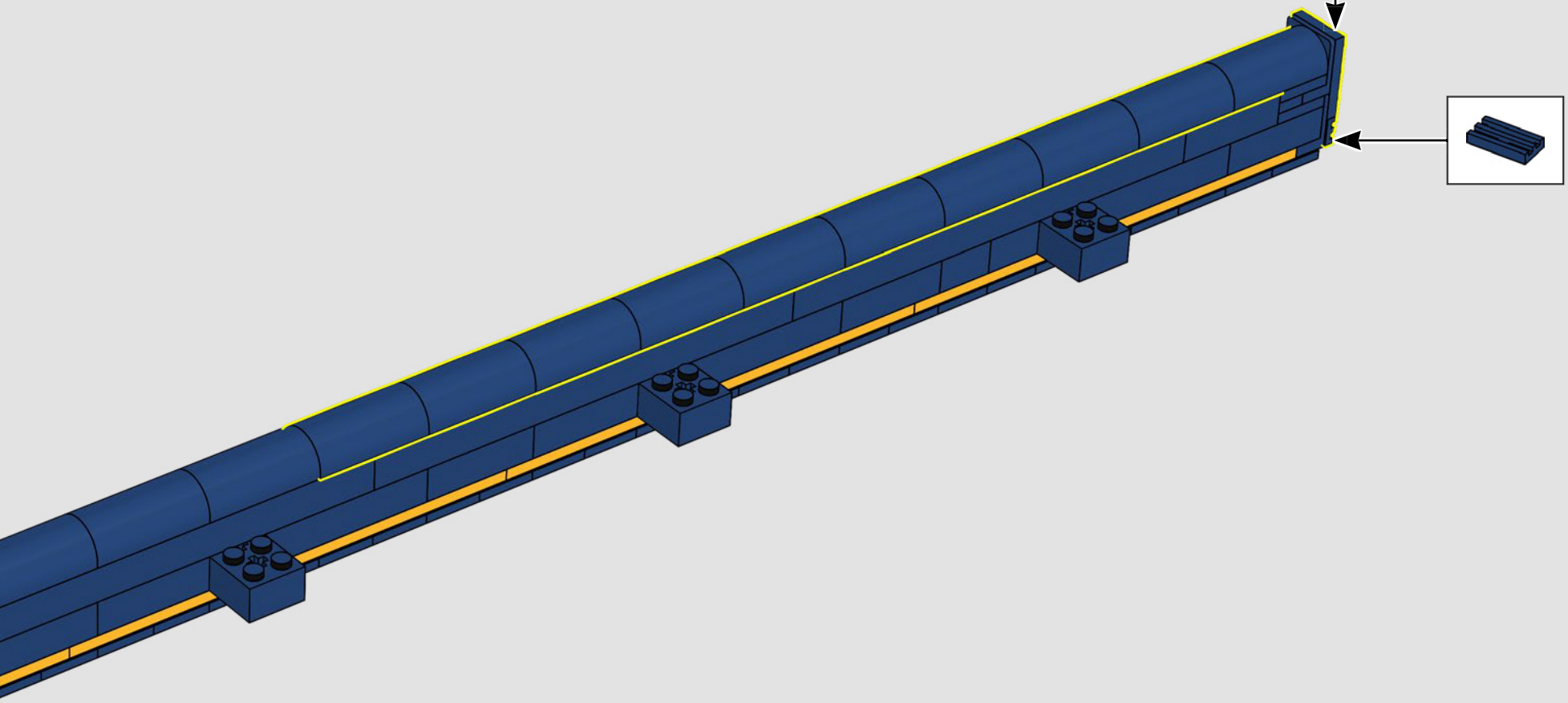

289

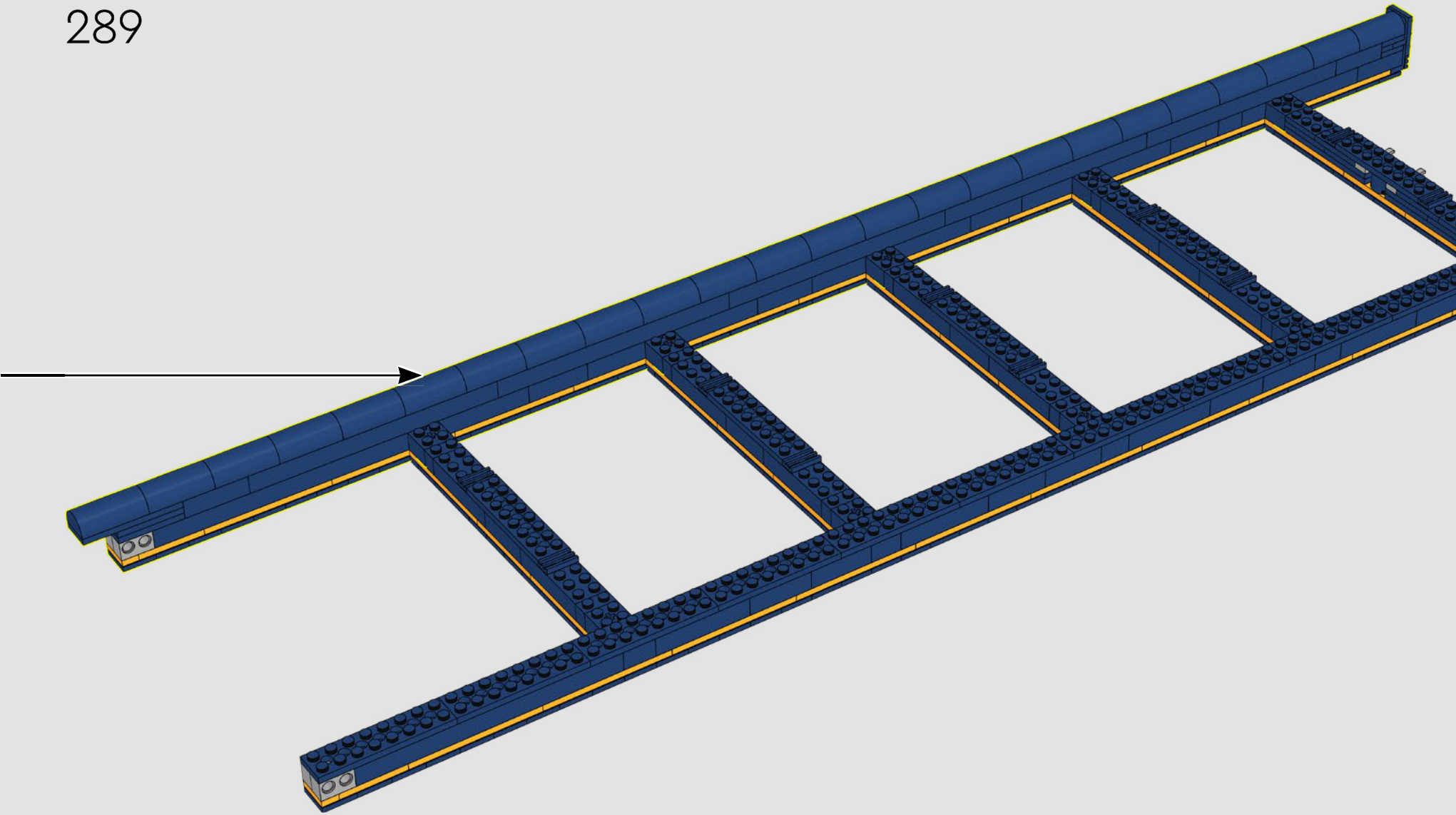

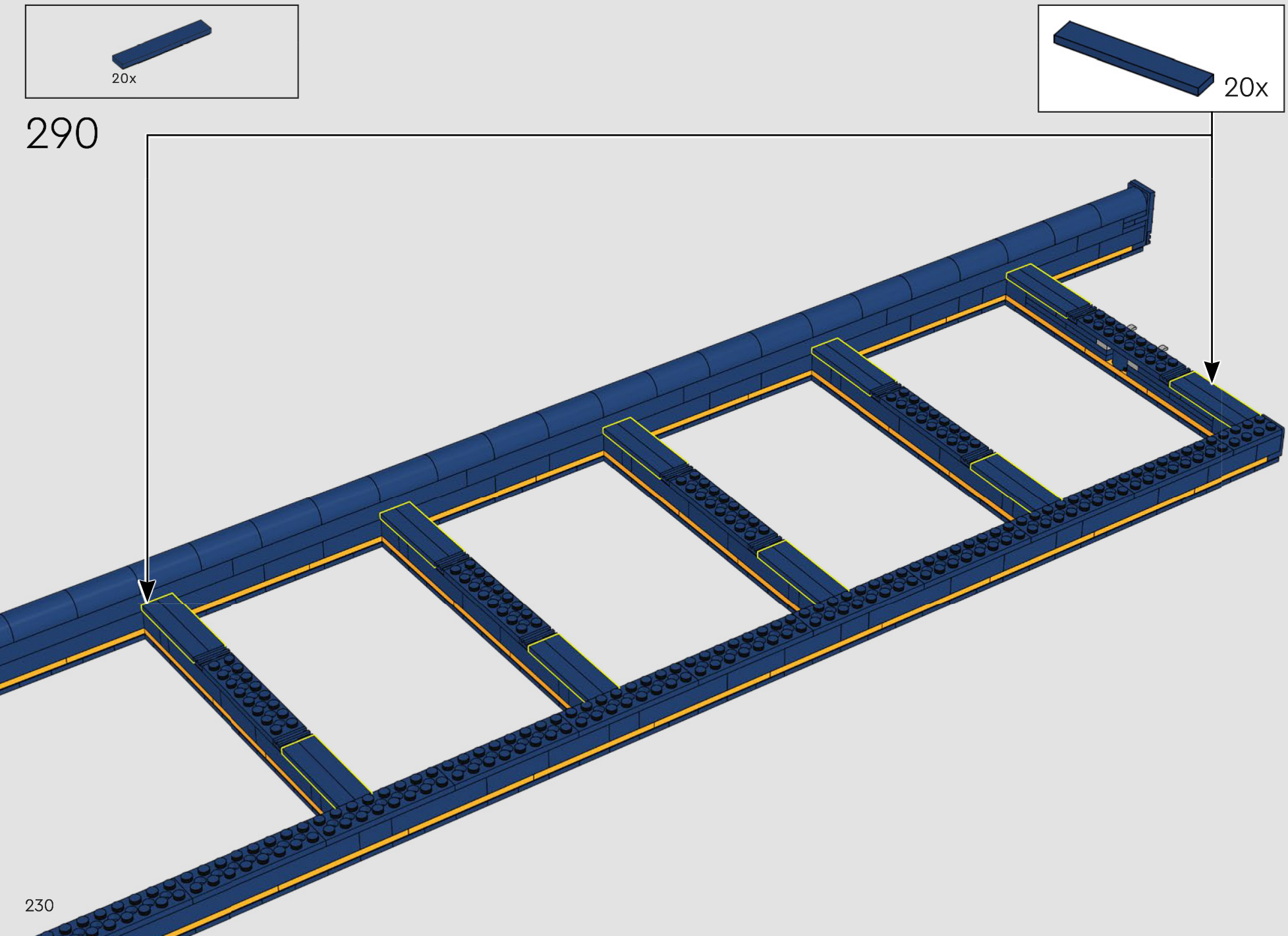

290

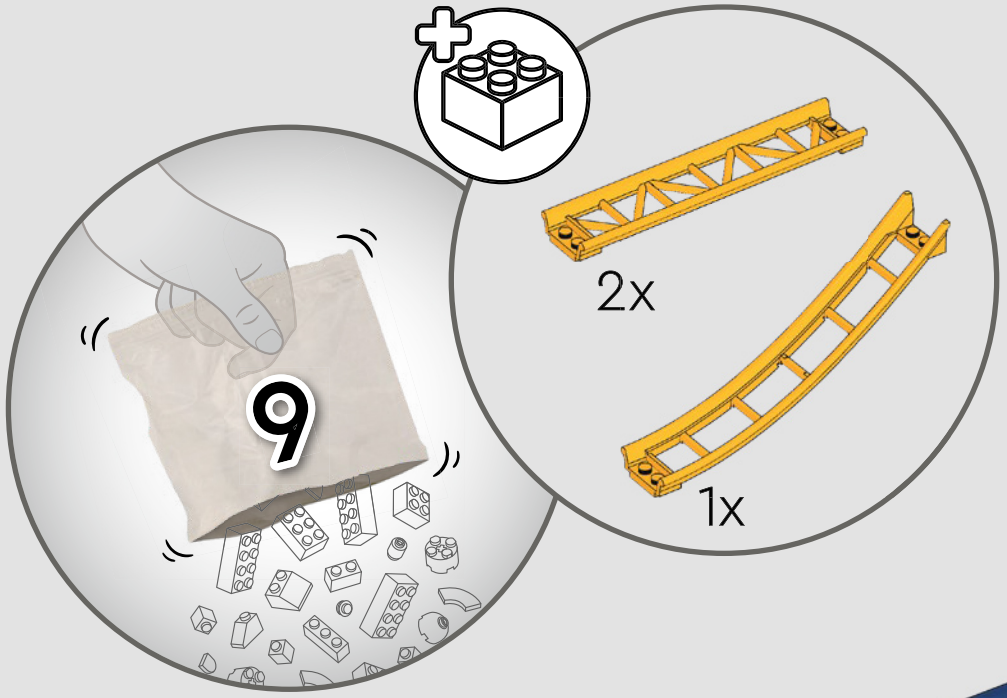

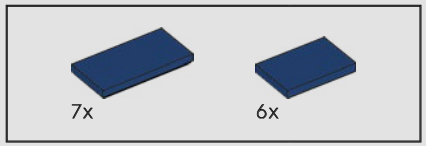

291

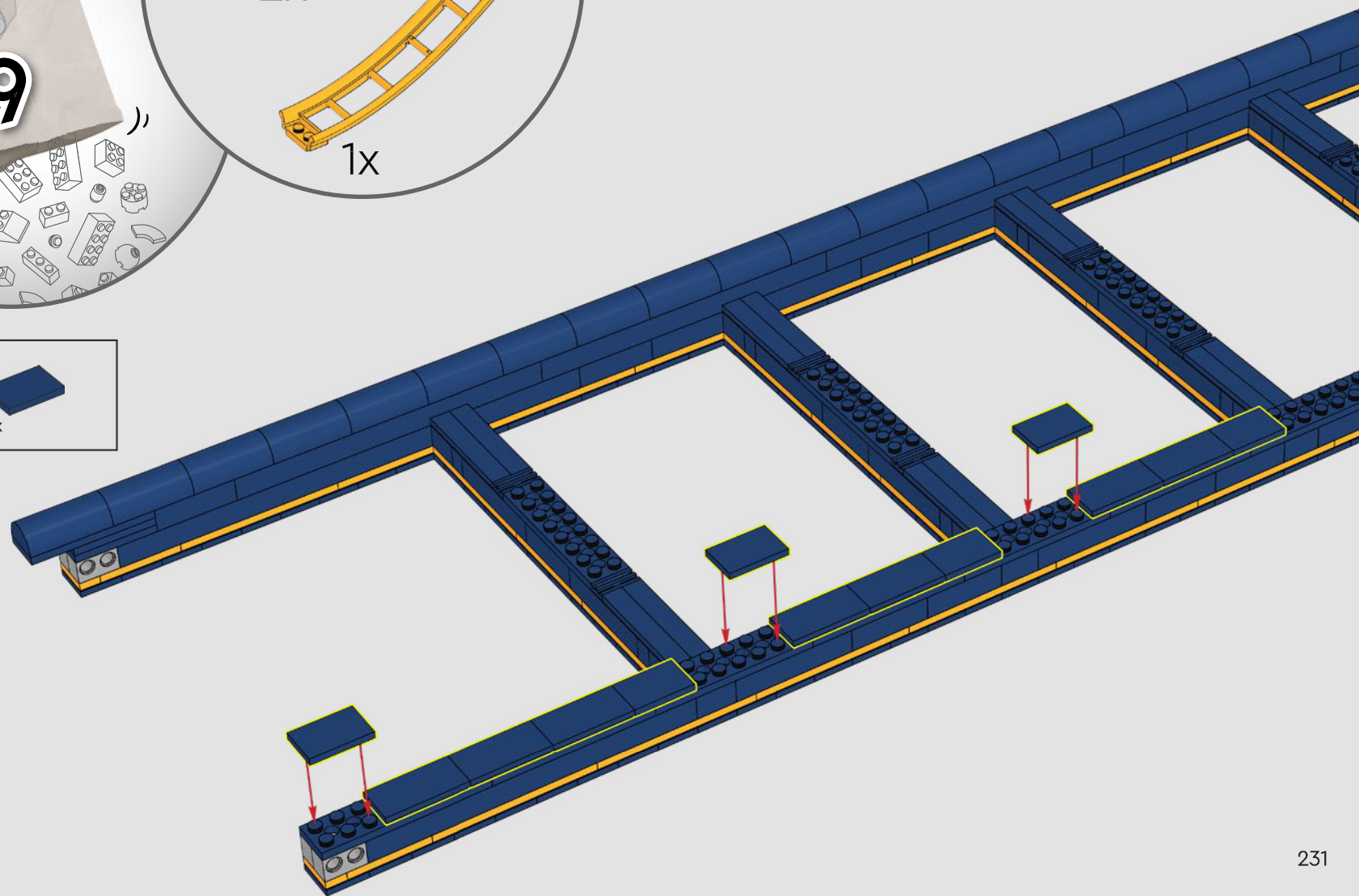

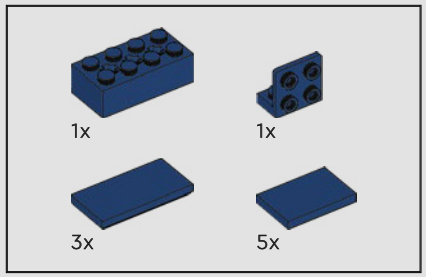

292

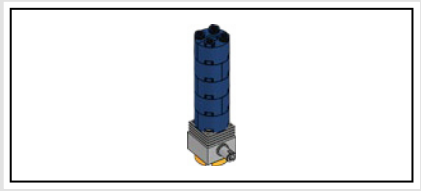

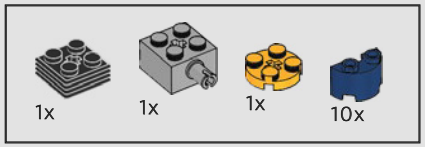

293

1

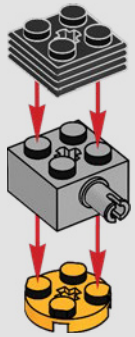

2

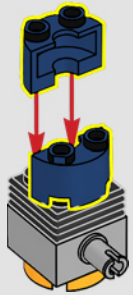

3

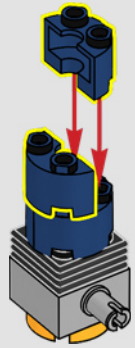

4

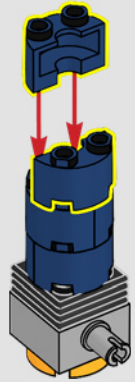

5

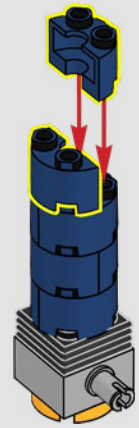

6

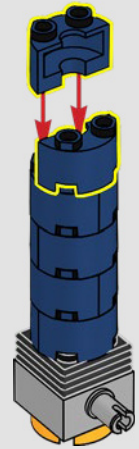

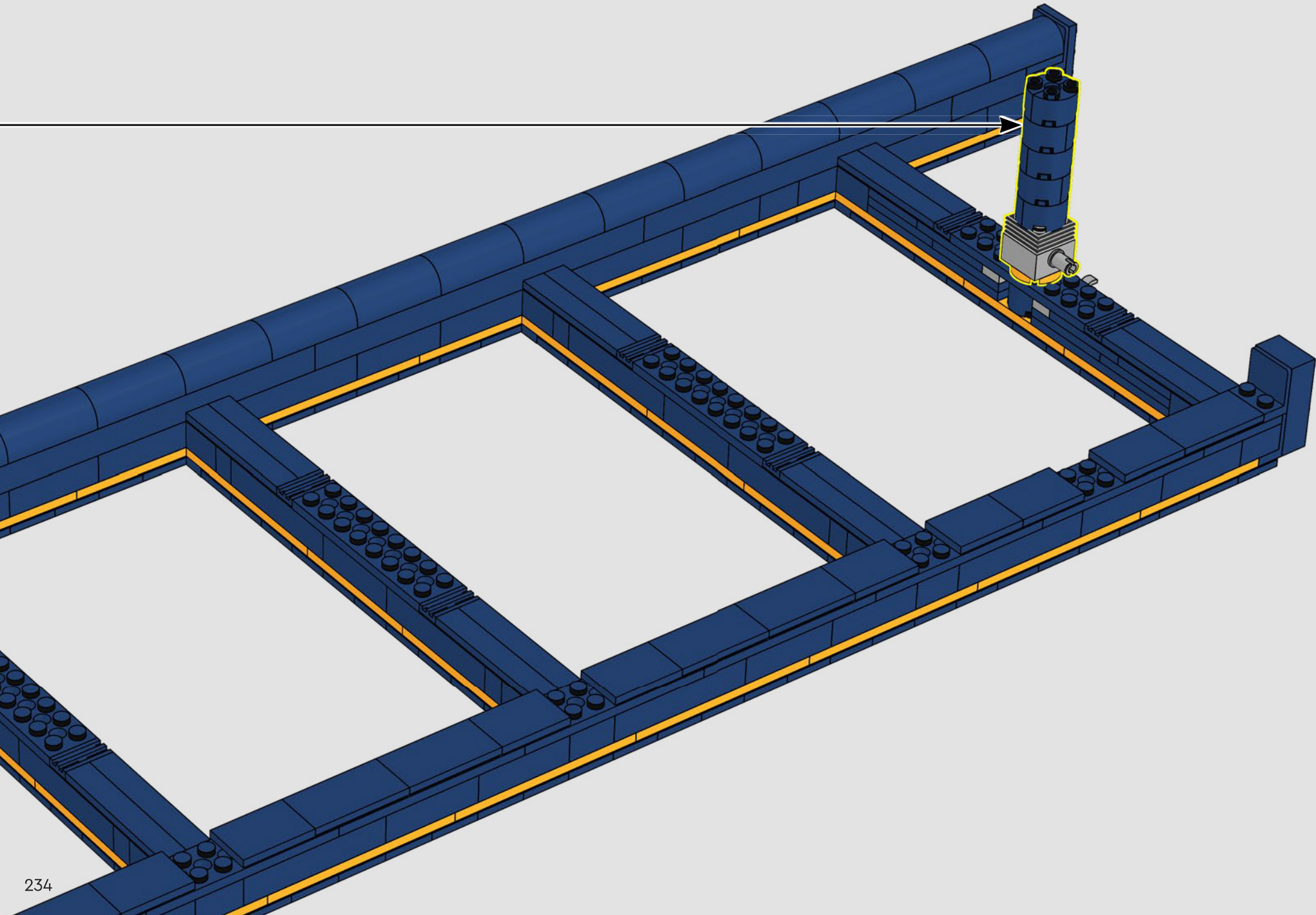

294

1

2

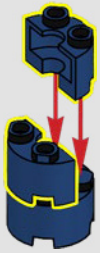

3

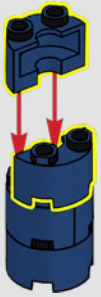

4

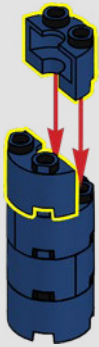

5

6

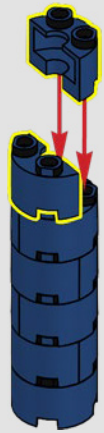

7

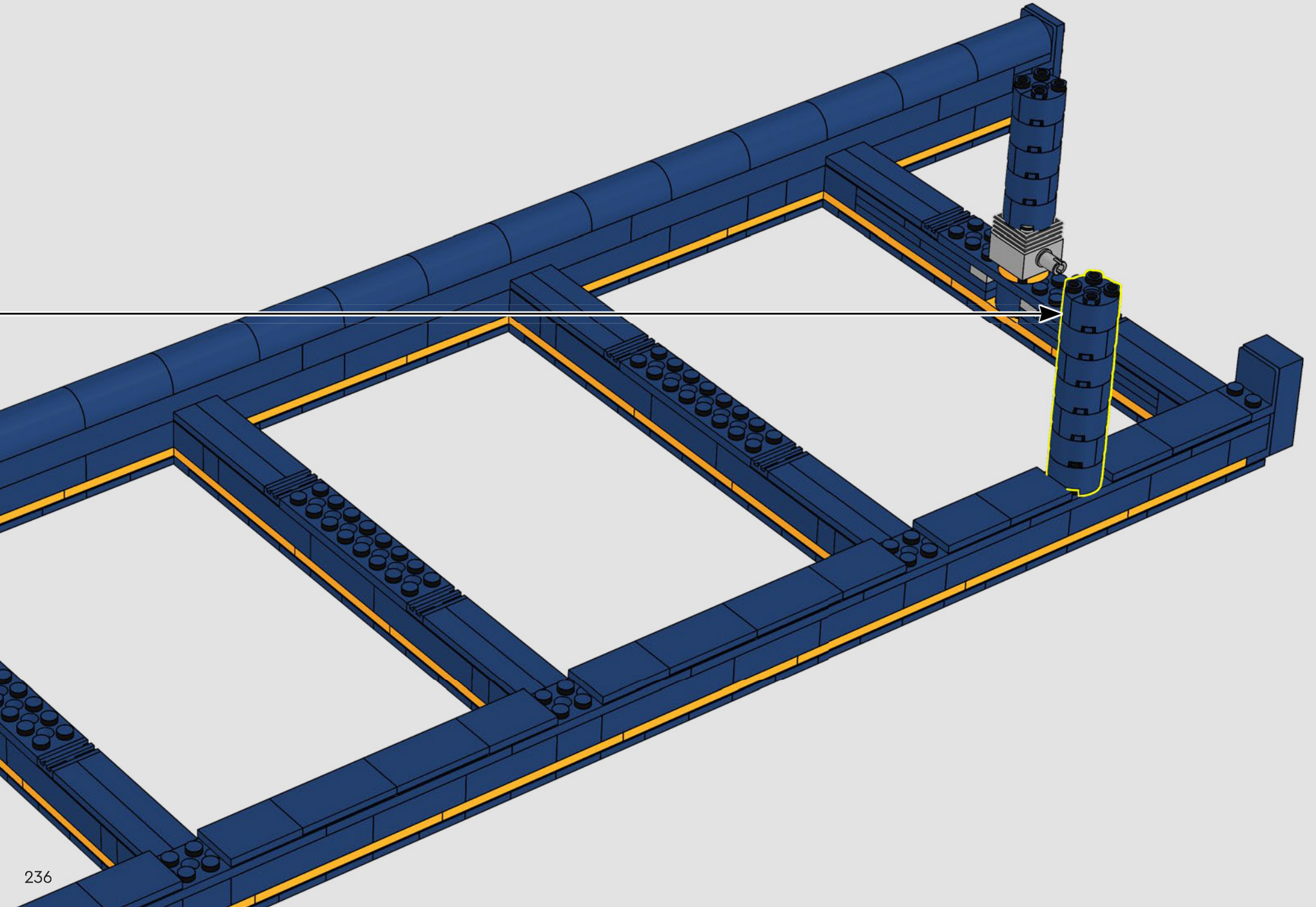

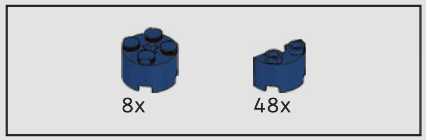

295

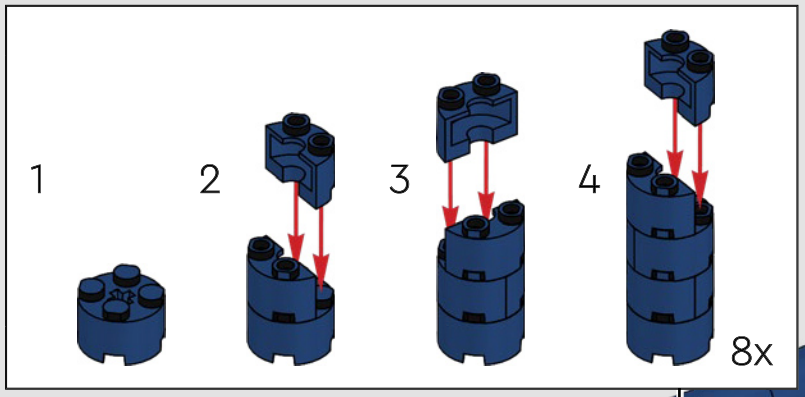

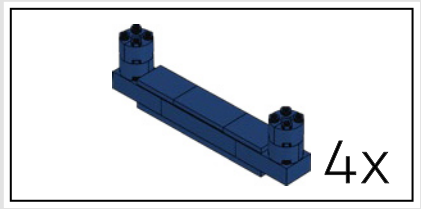

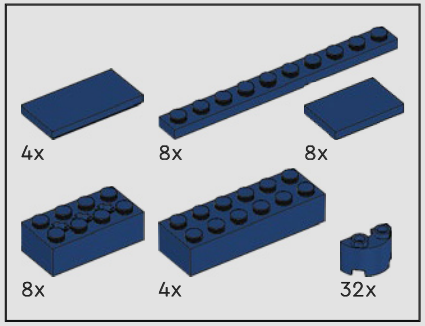

296

1

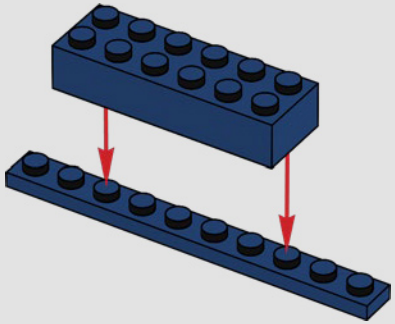

2

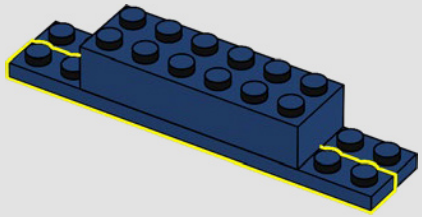

3

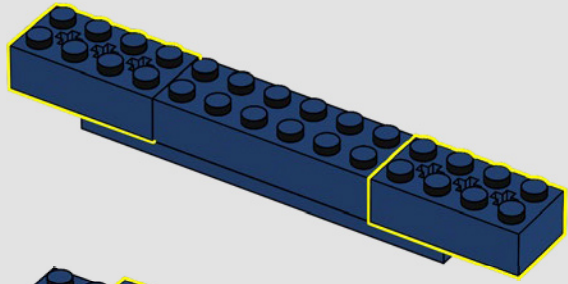

4

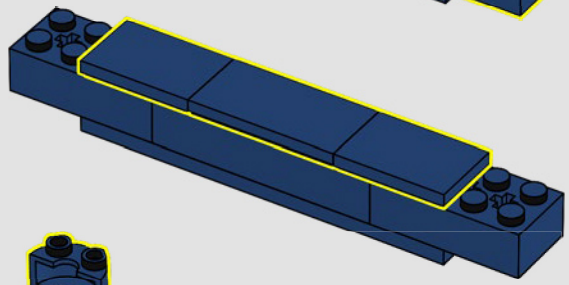

5

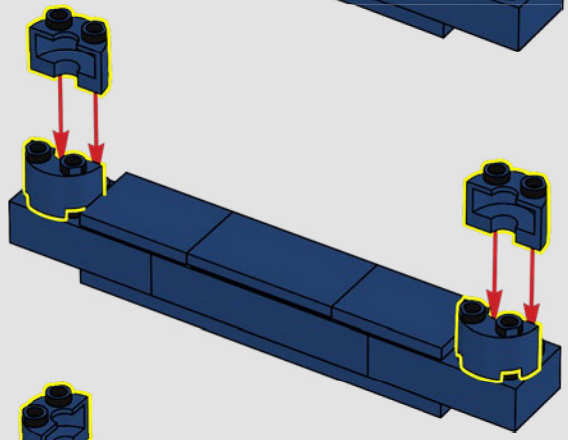

6

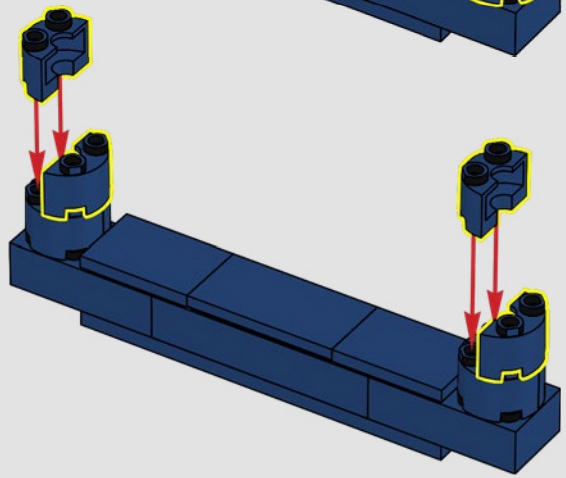

4x

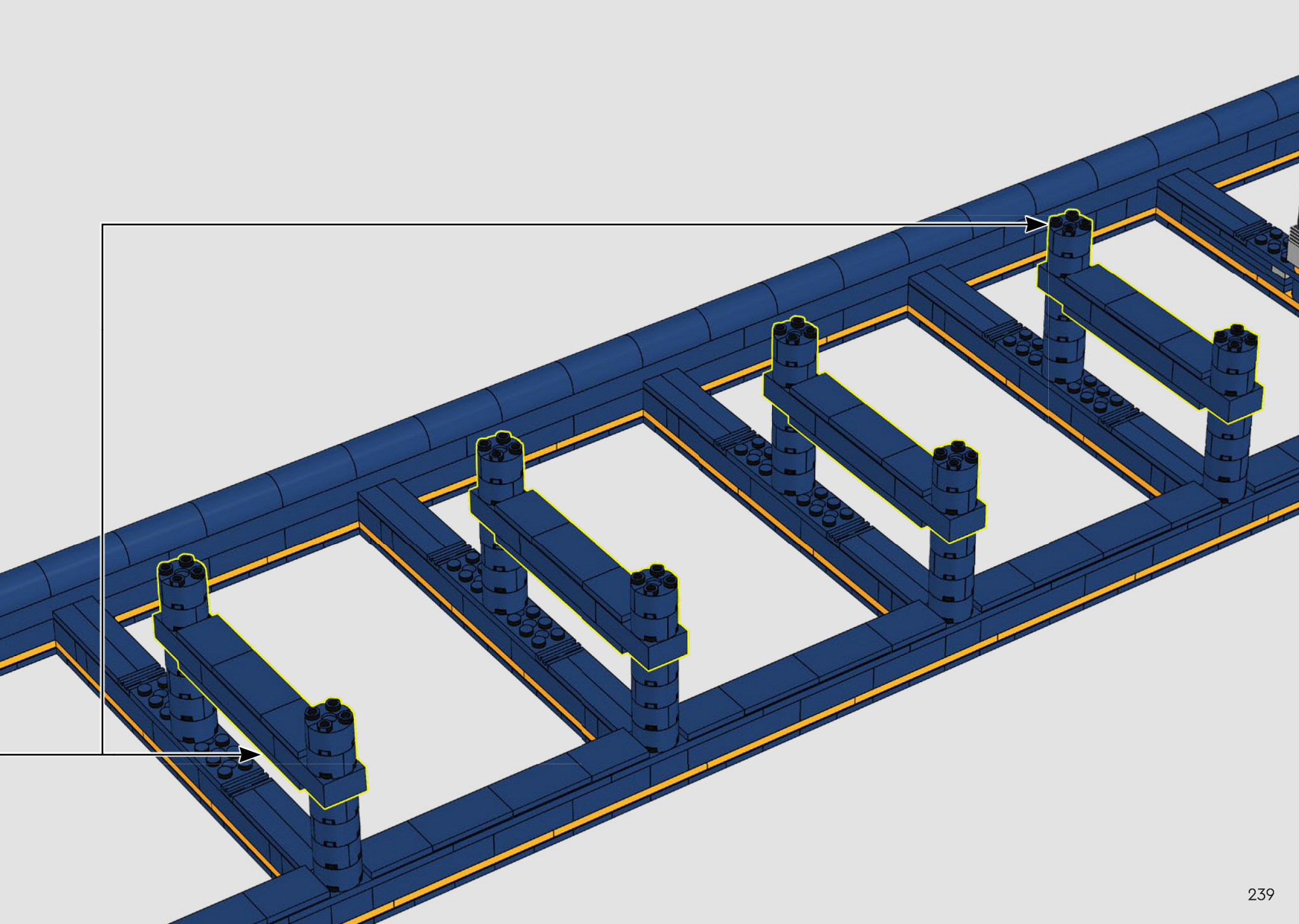

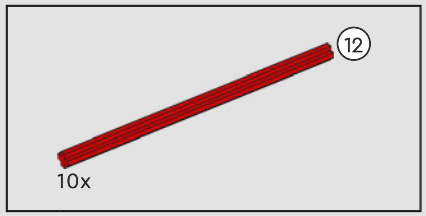

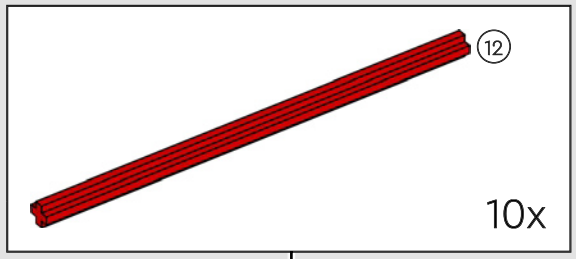

297

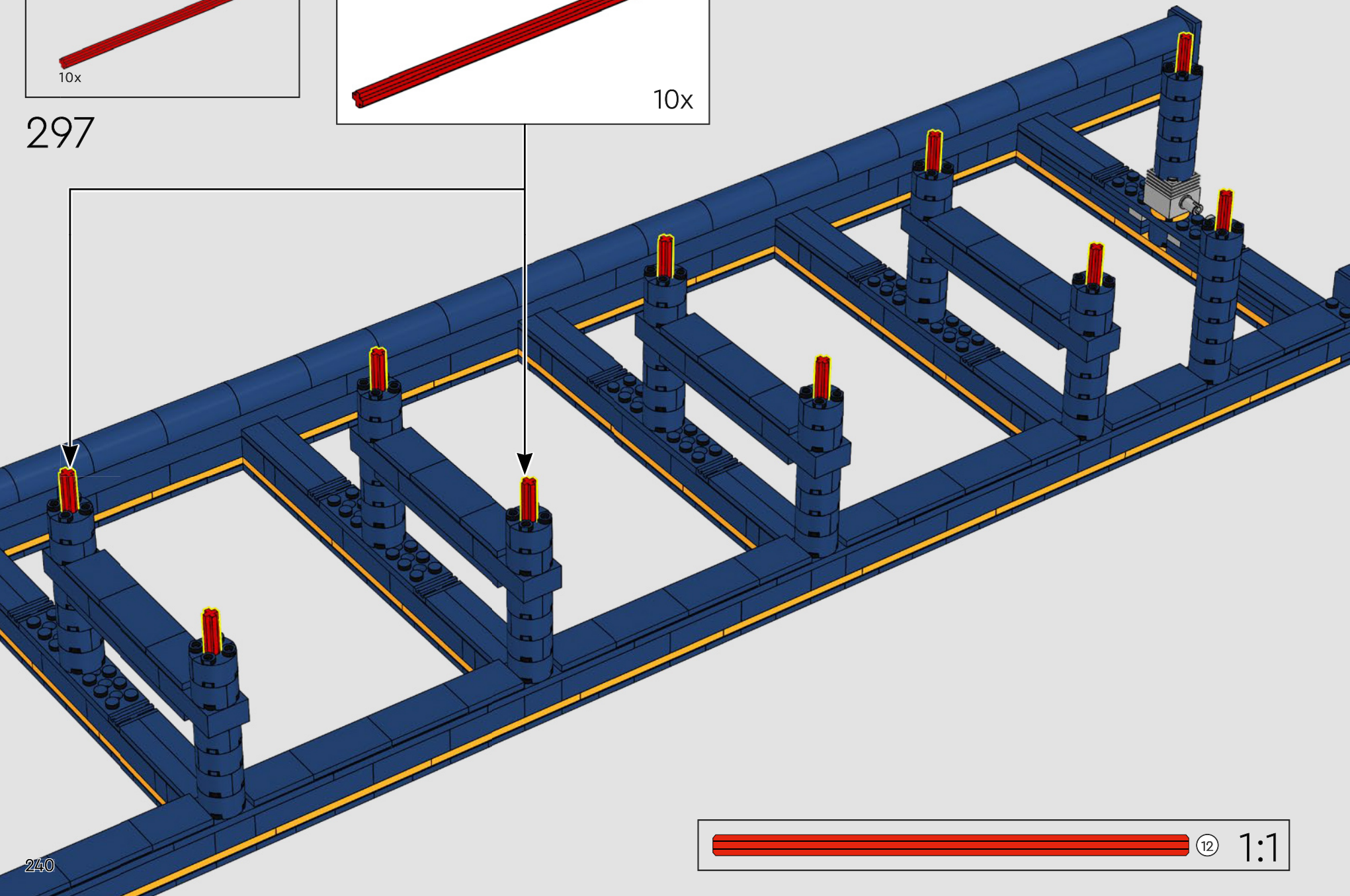

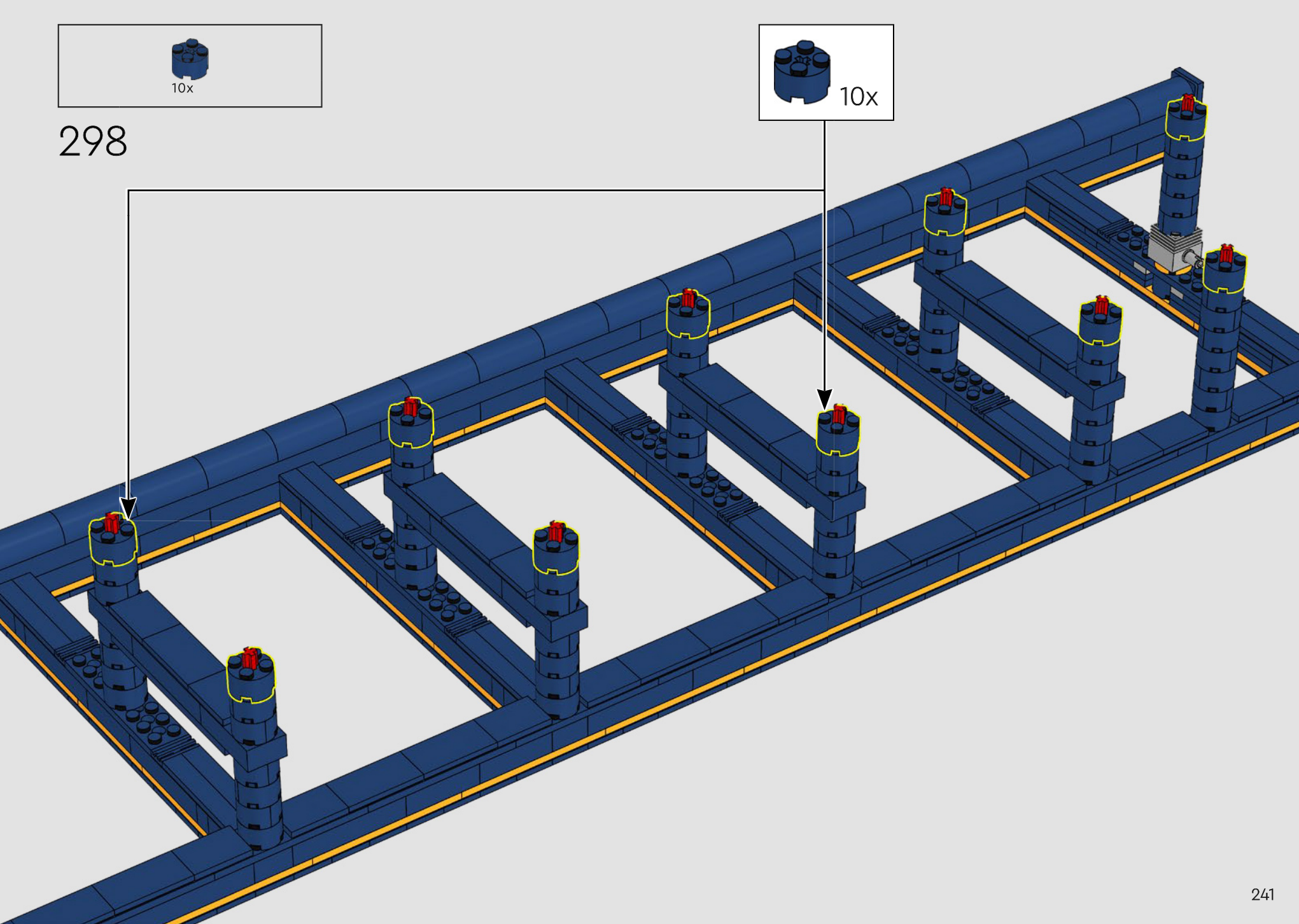

298

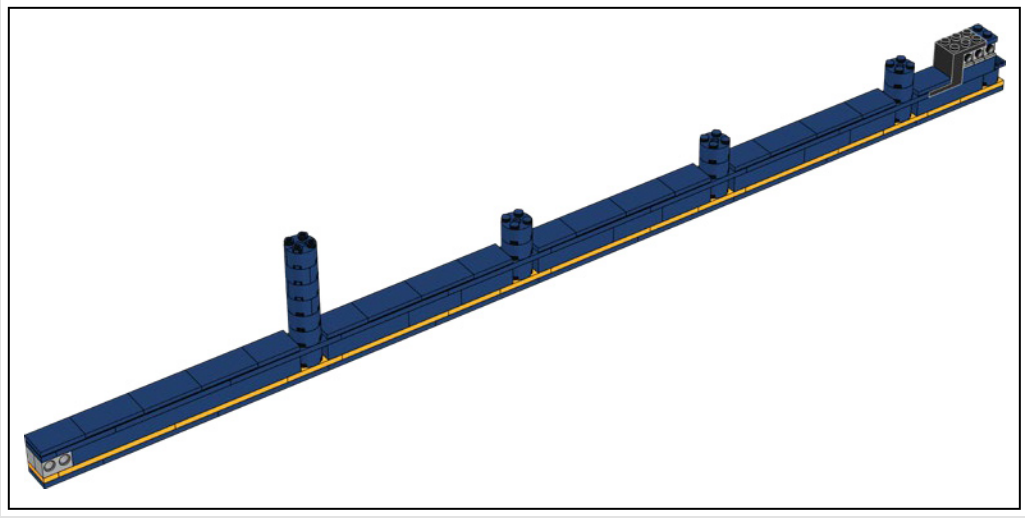

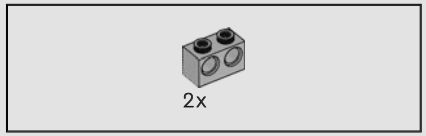

301

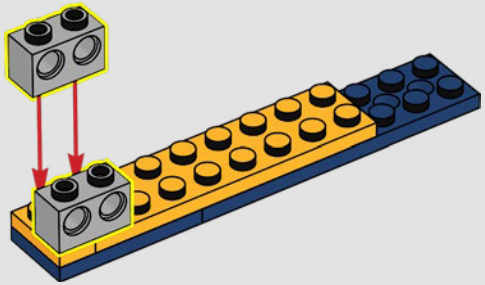

299

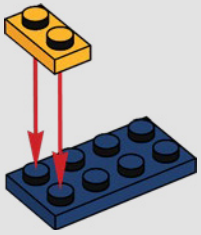

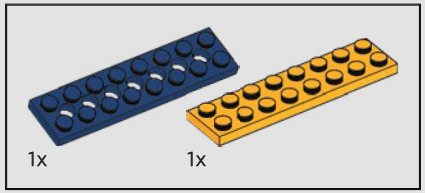

300

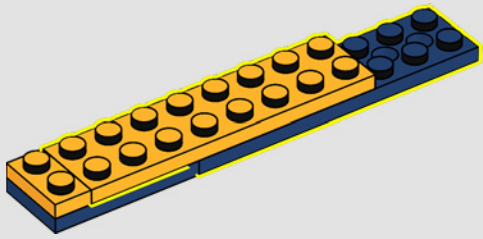

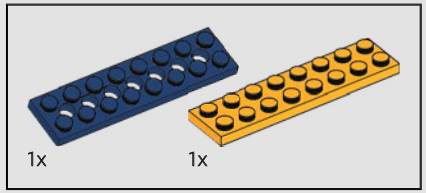

302

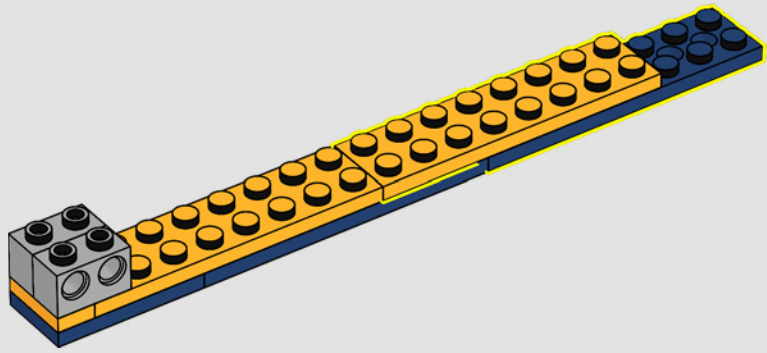

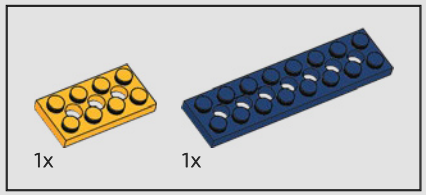

303

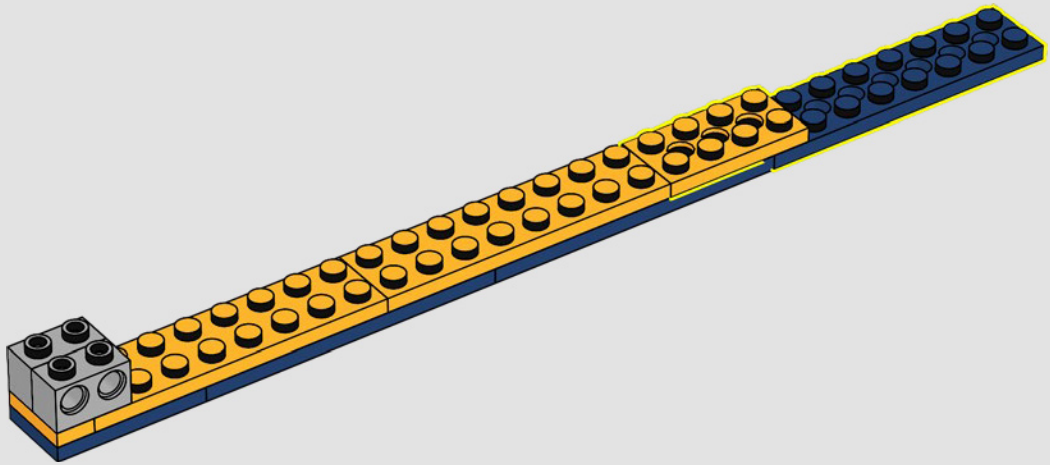

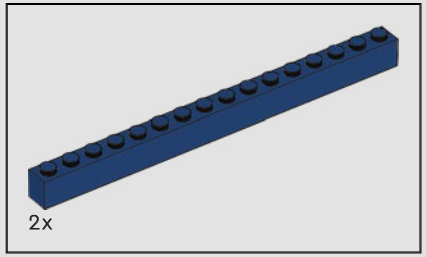

304

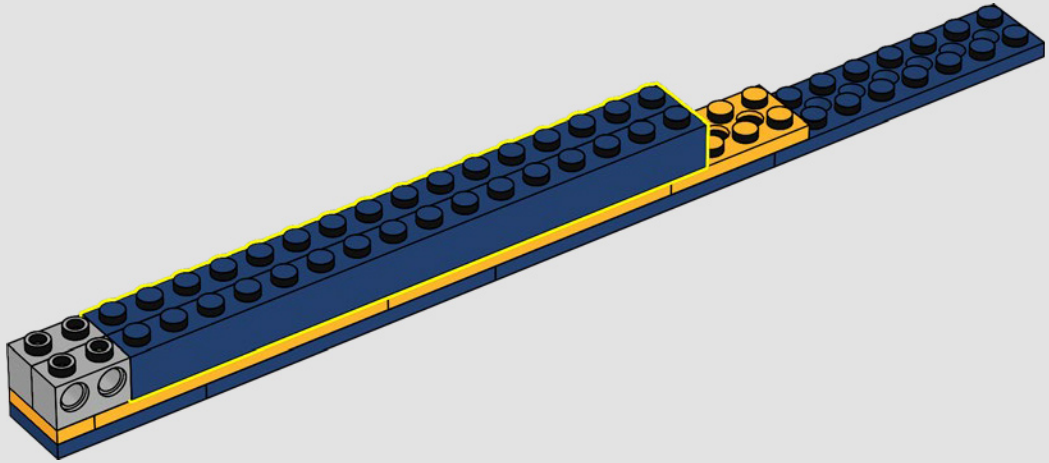

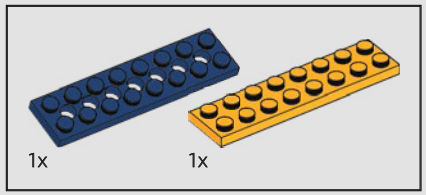

305

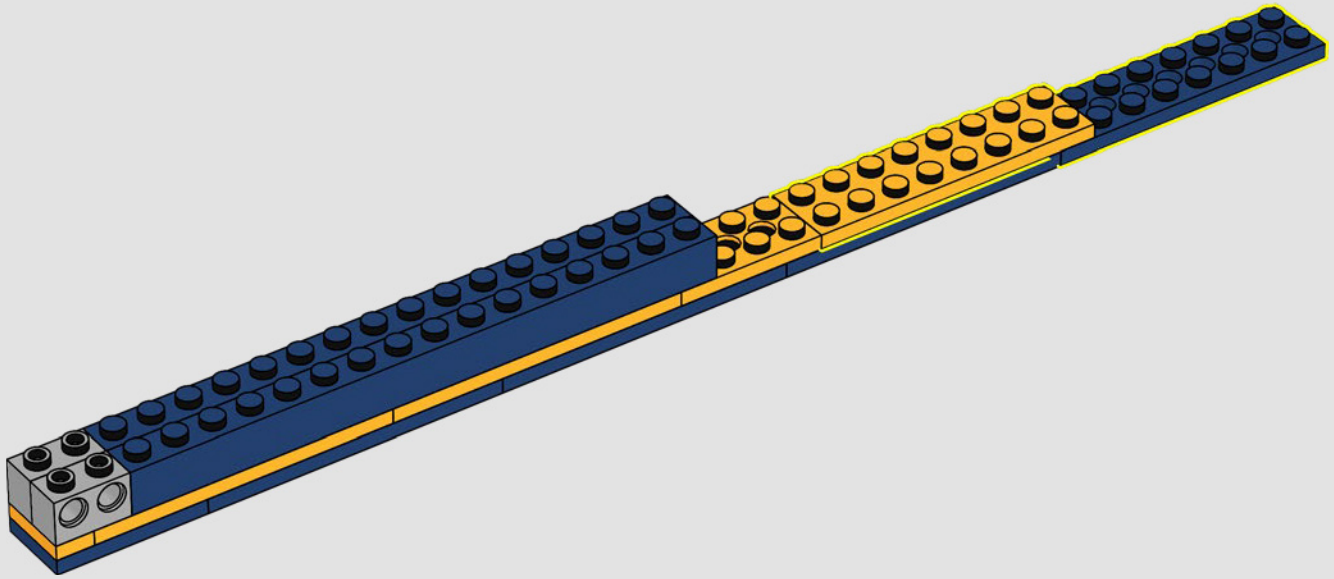

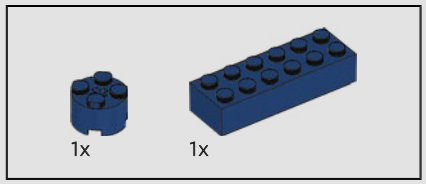

306

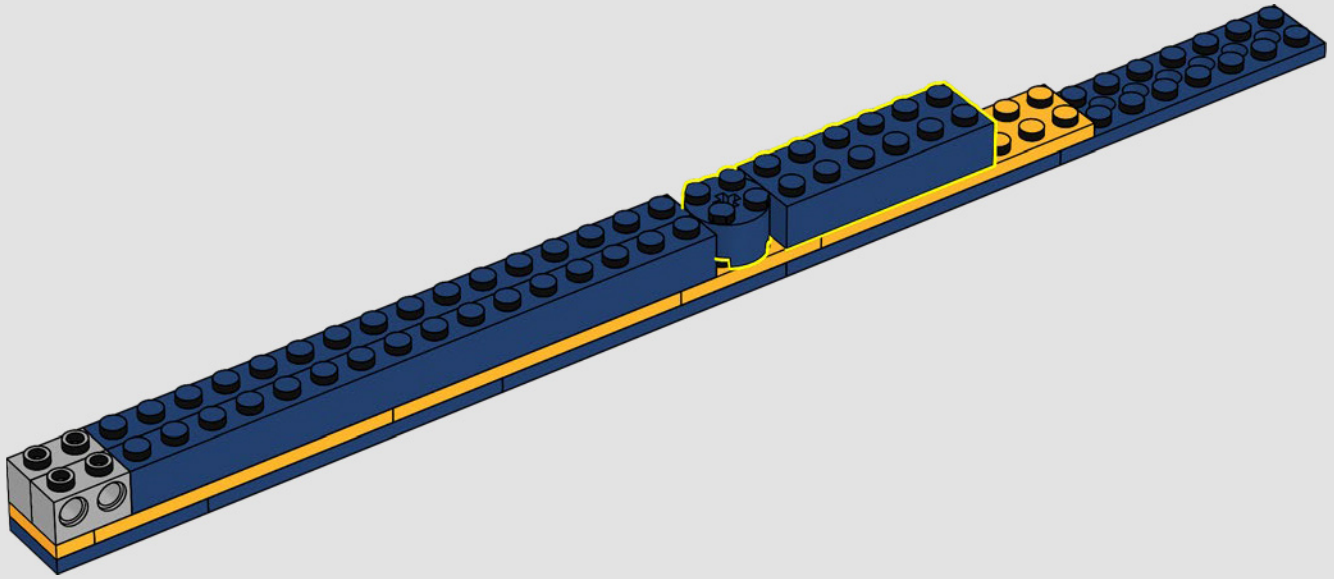

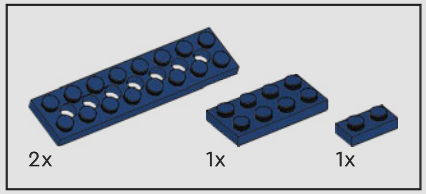

307

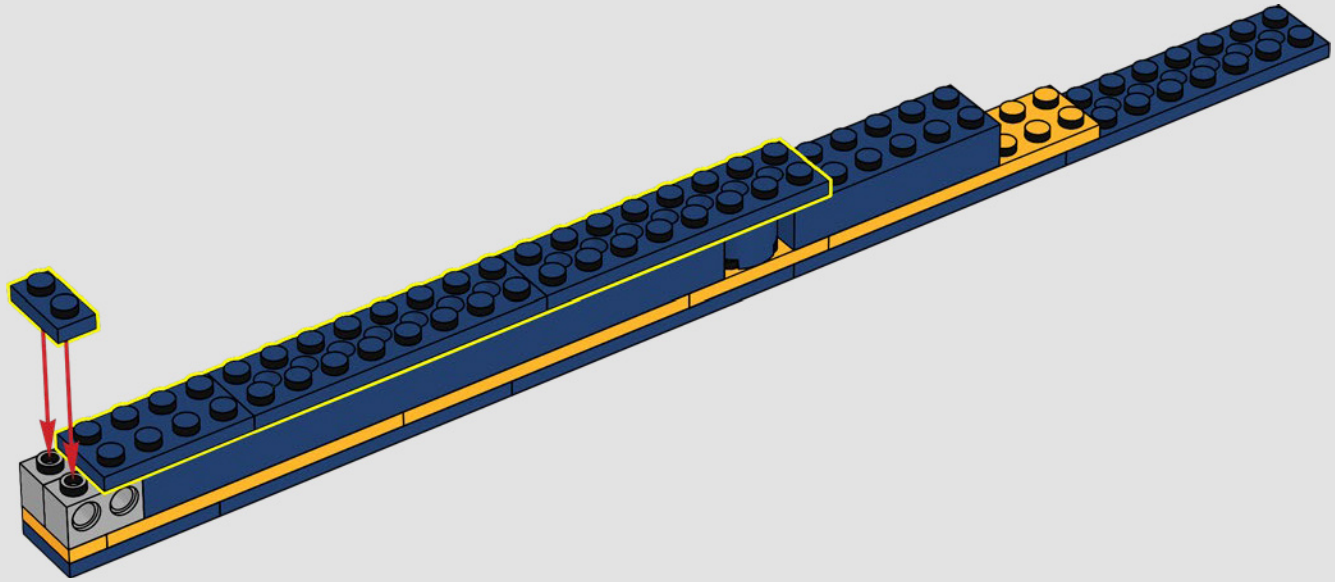

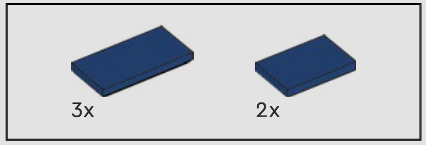

308

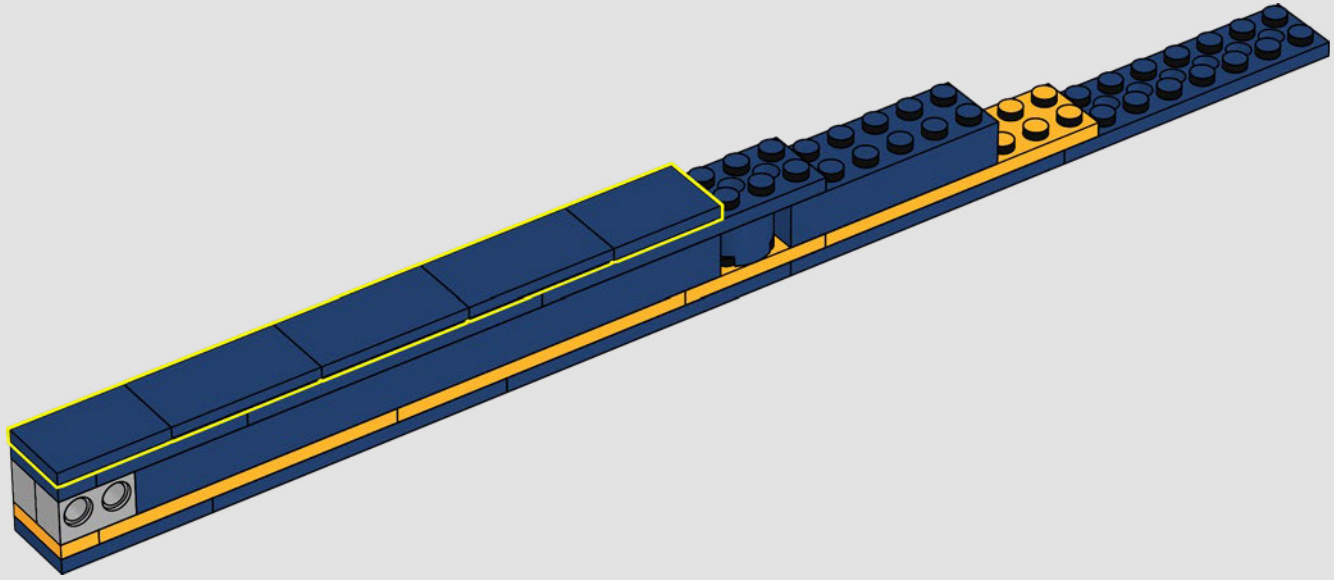

309

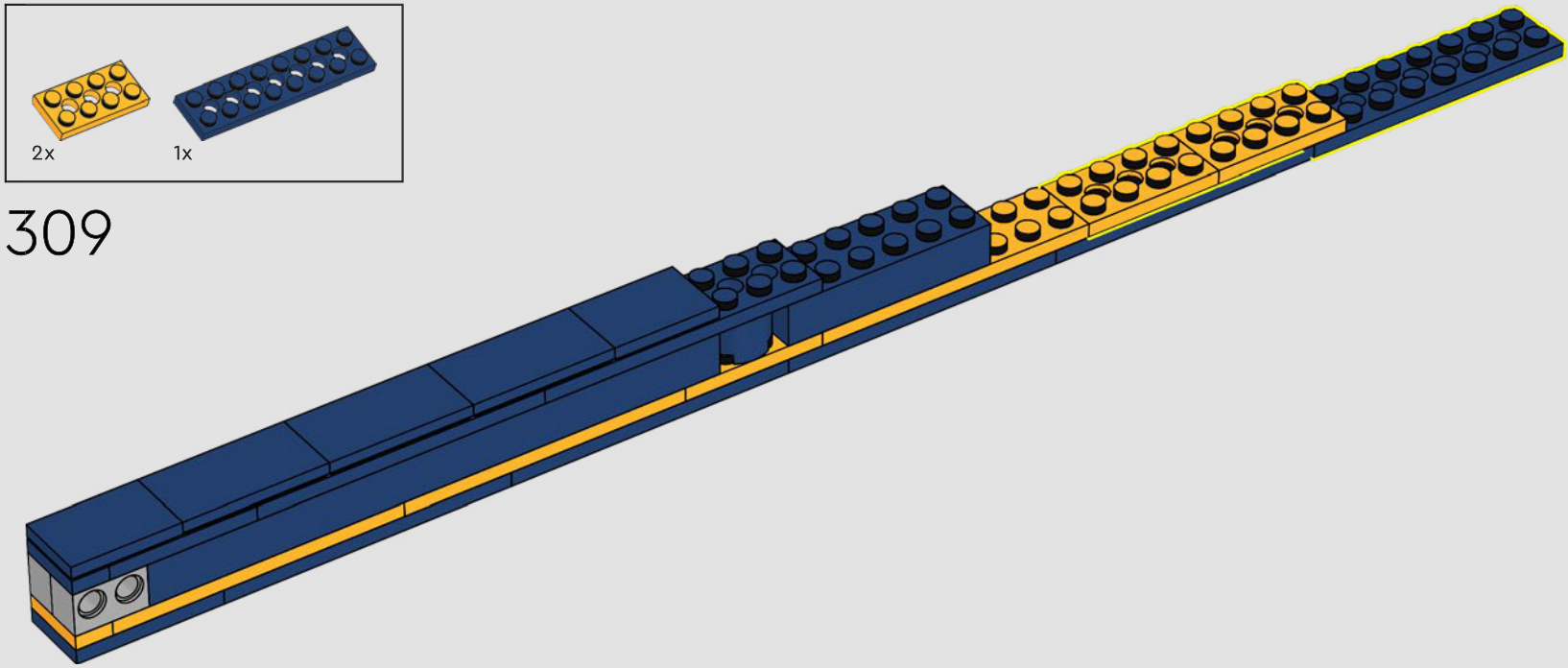

310

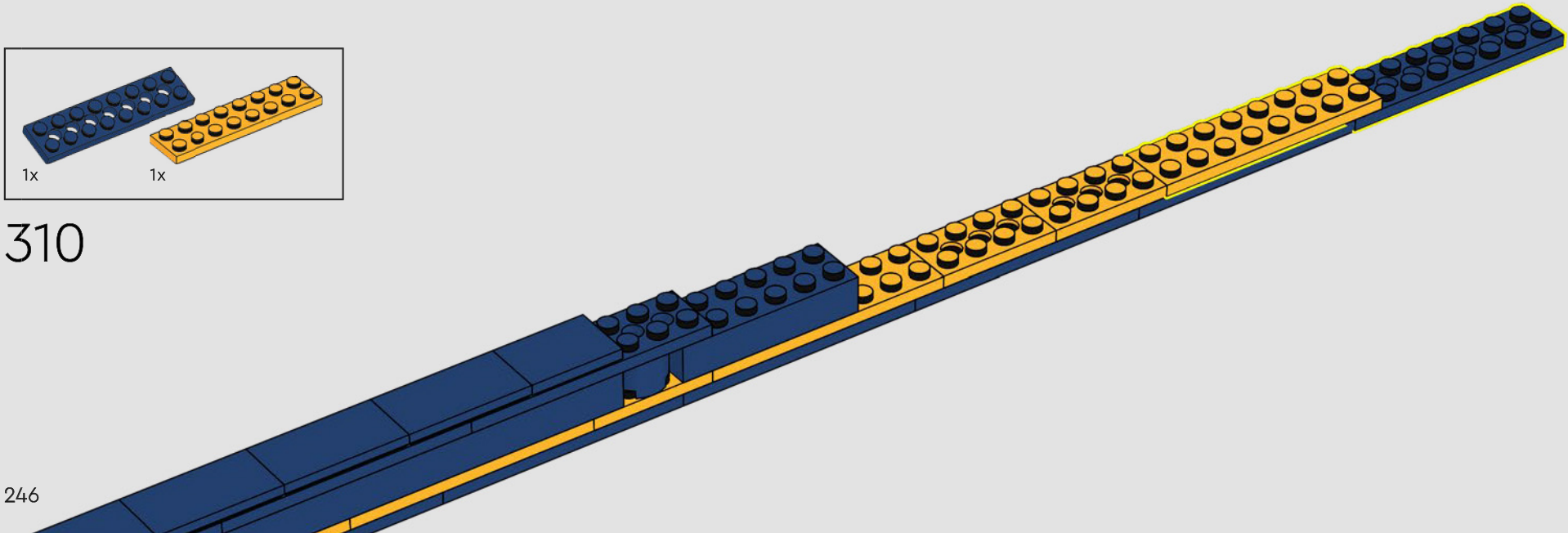

311

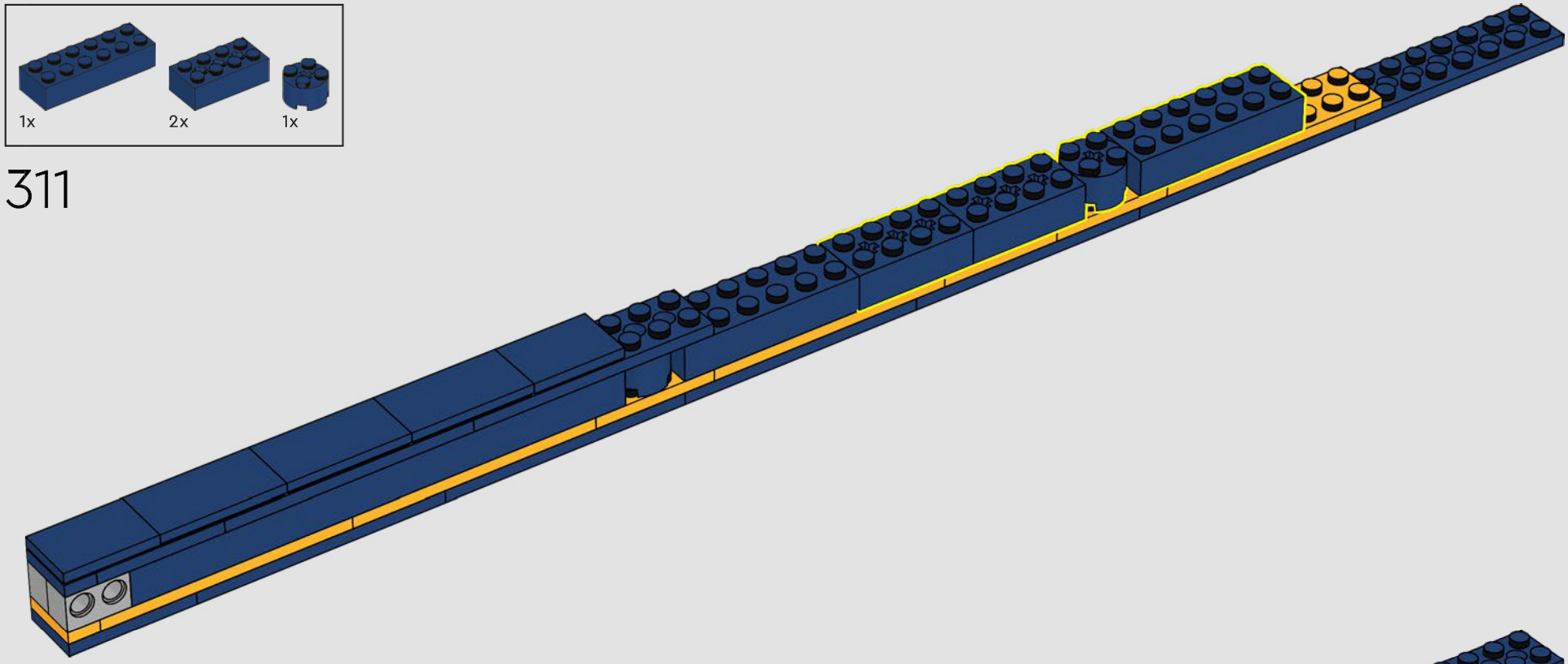

312

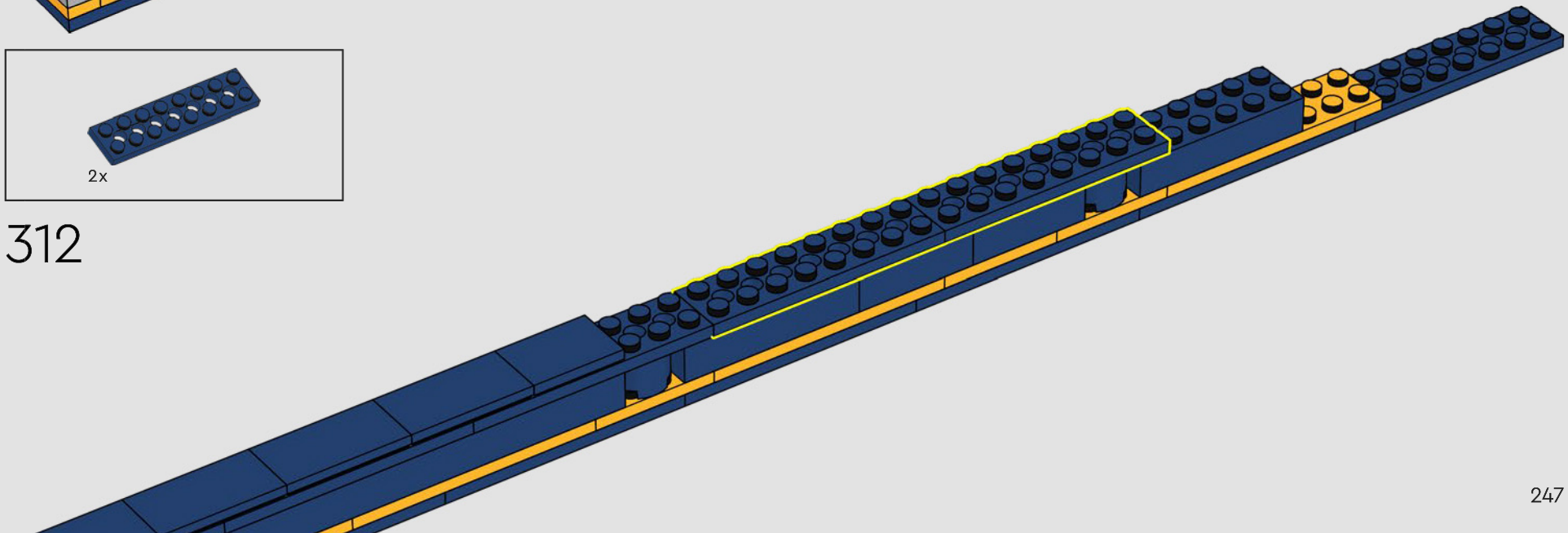

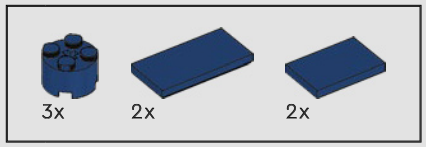

313

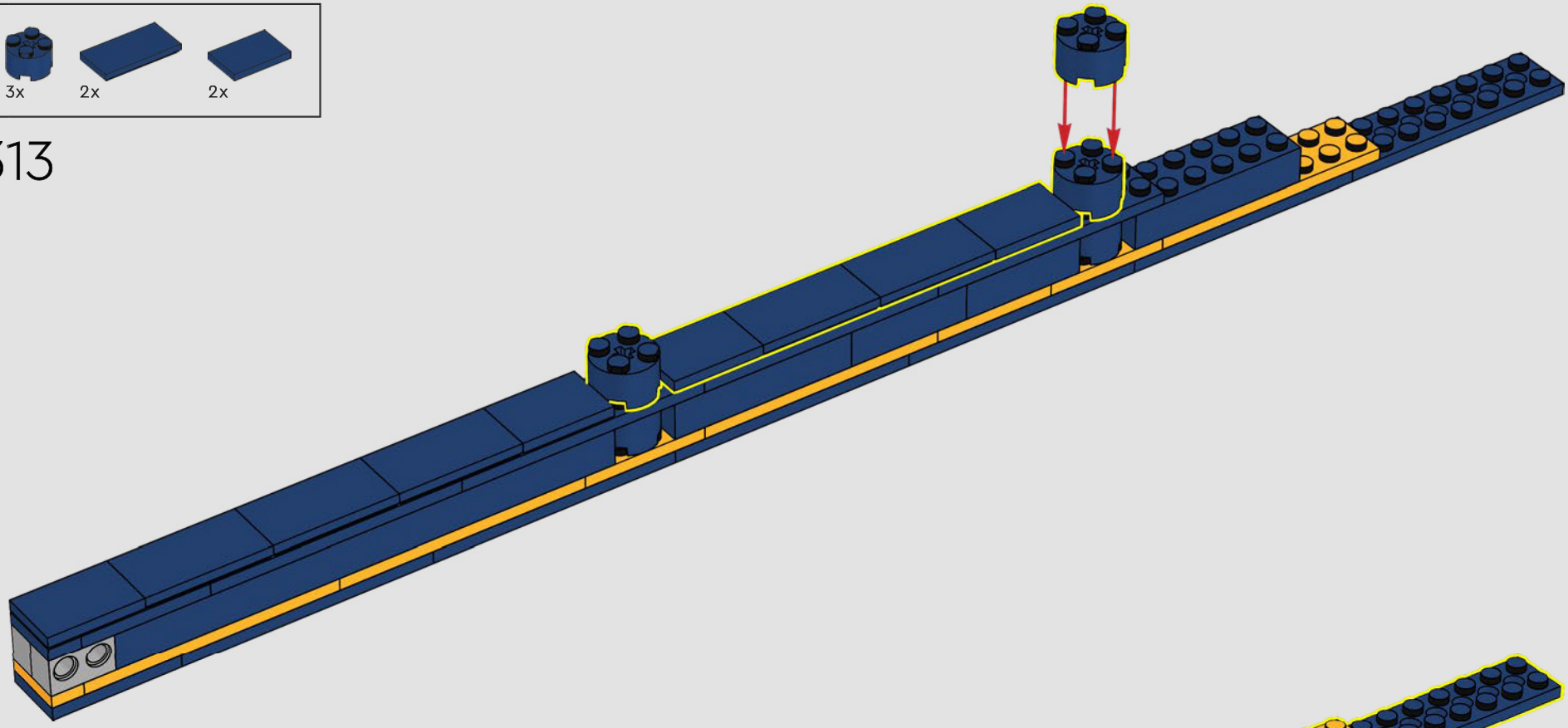

314

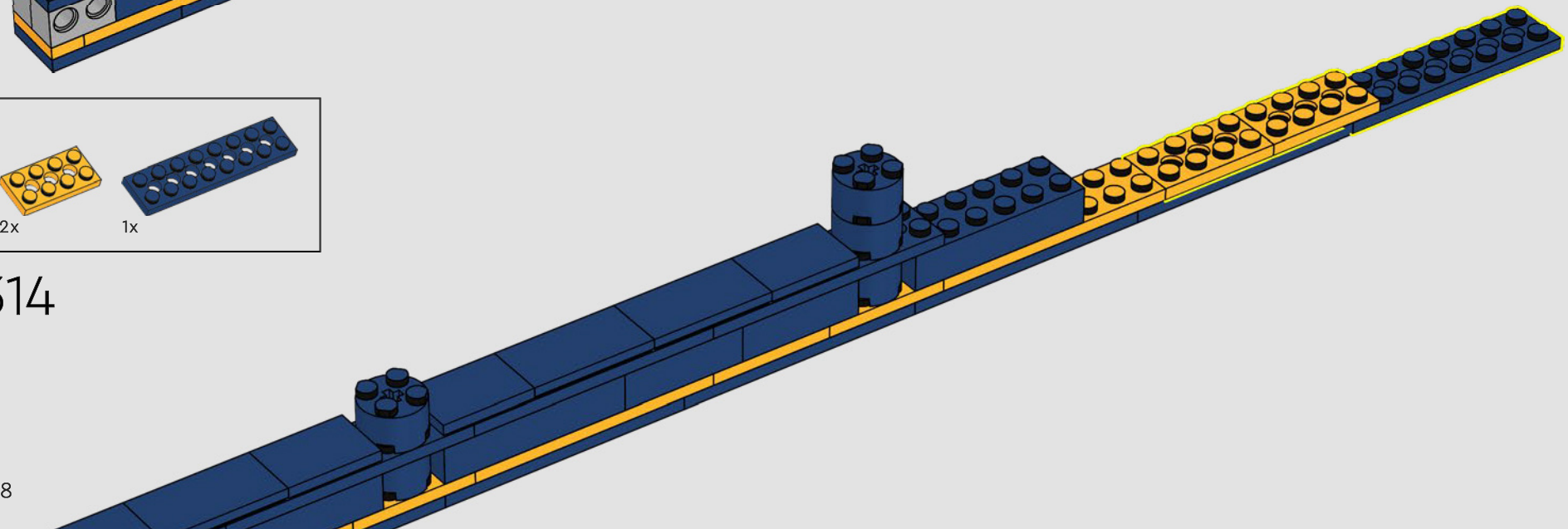

315

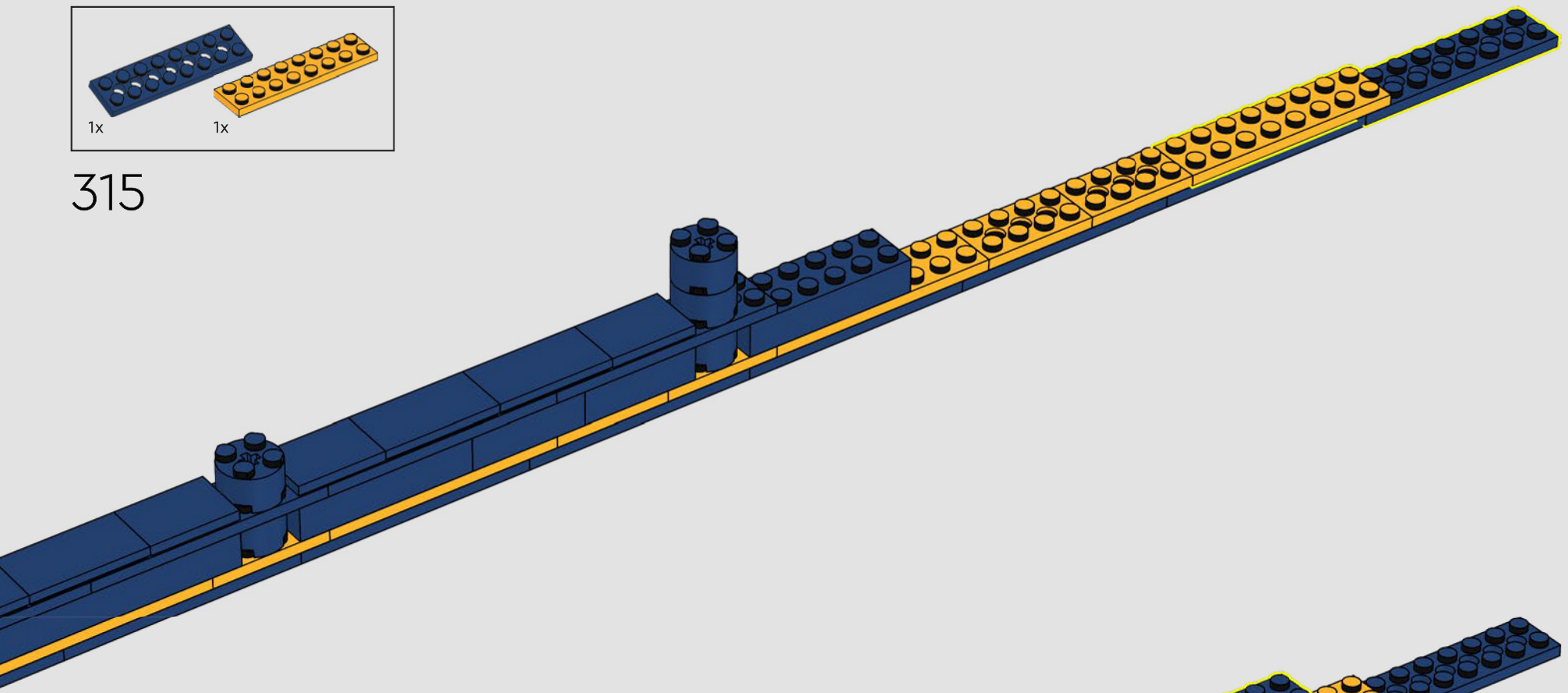

316

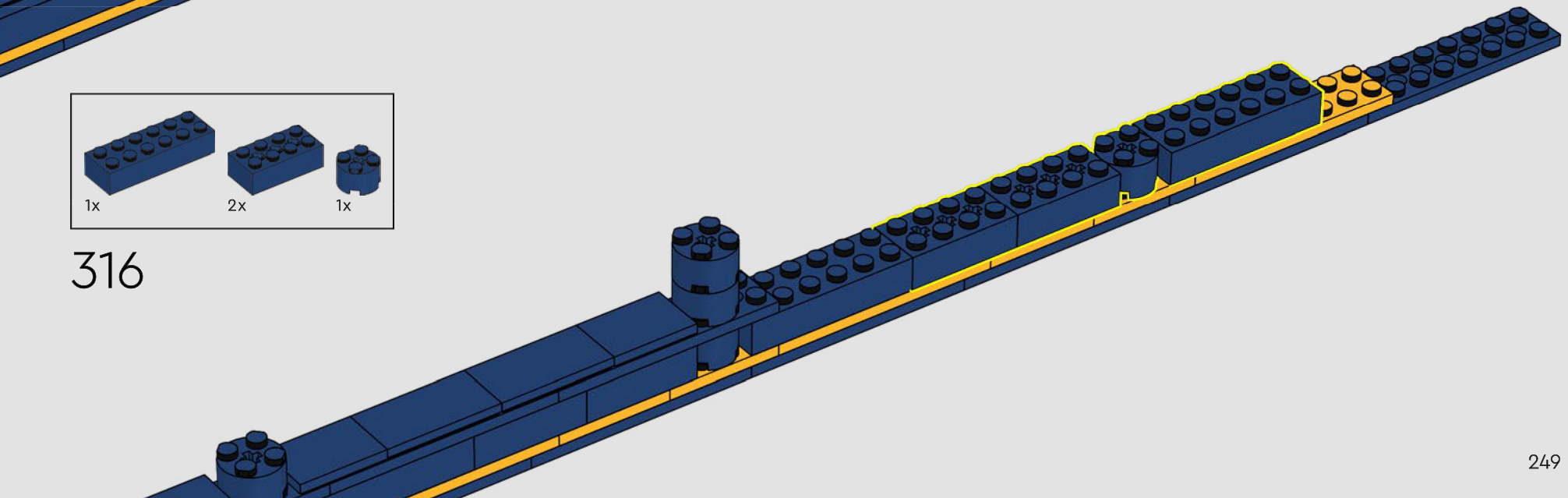

317

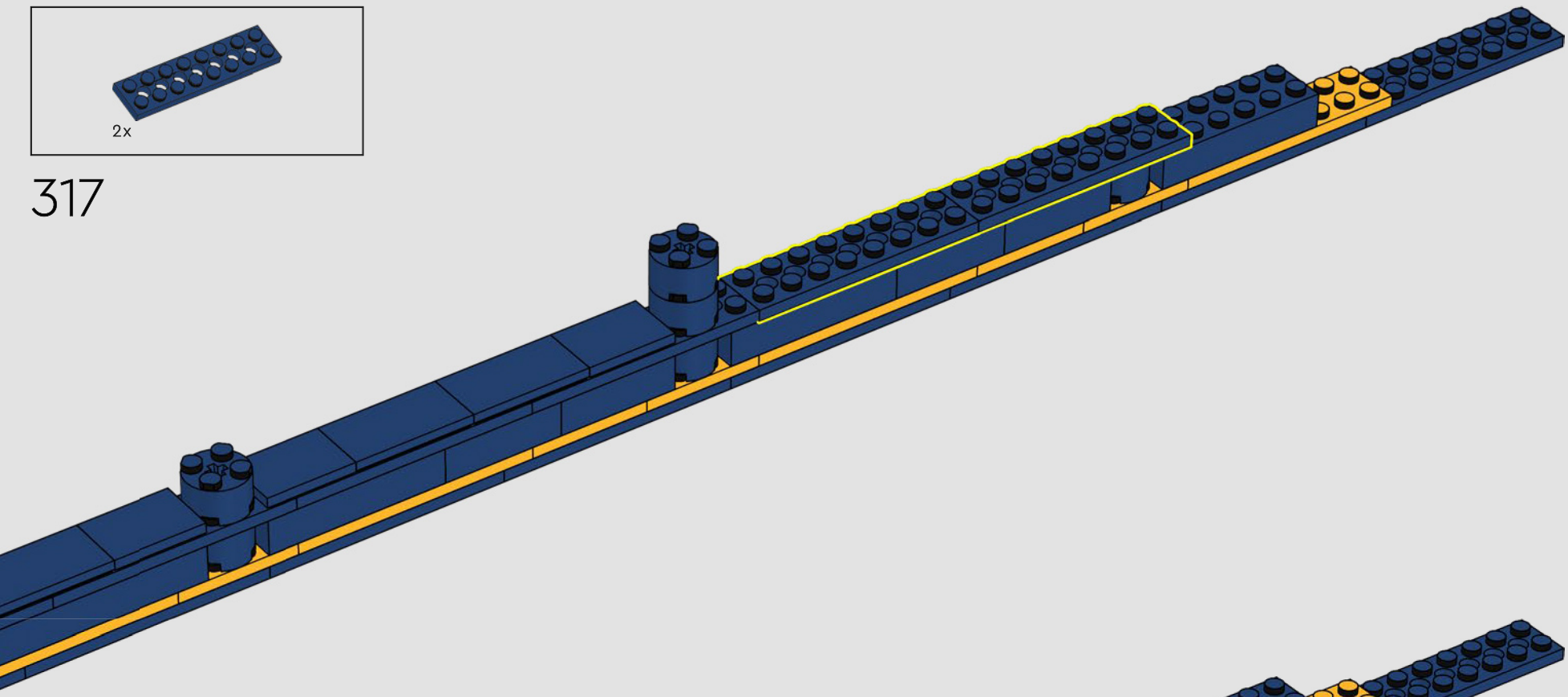

318

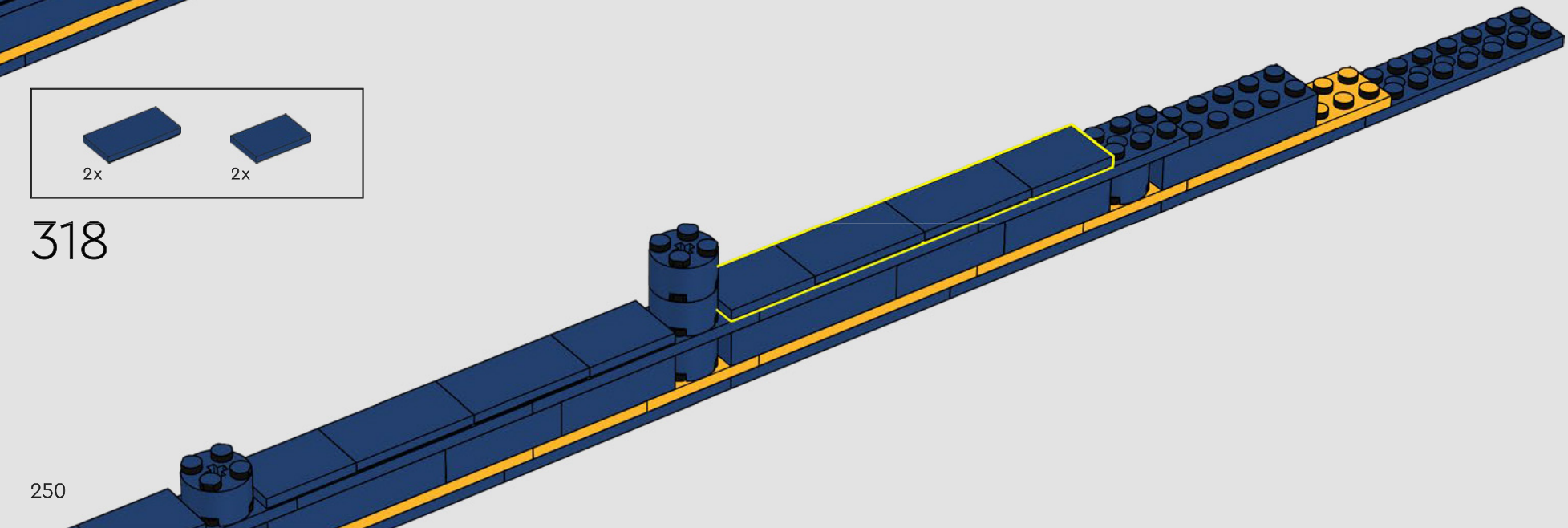

319

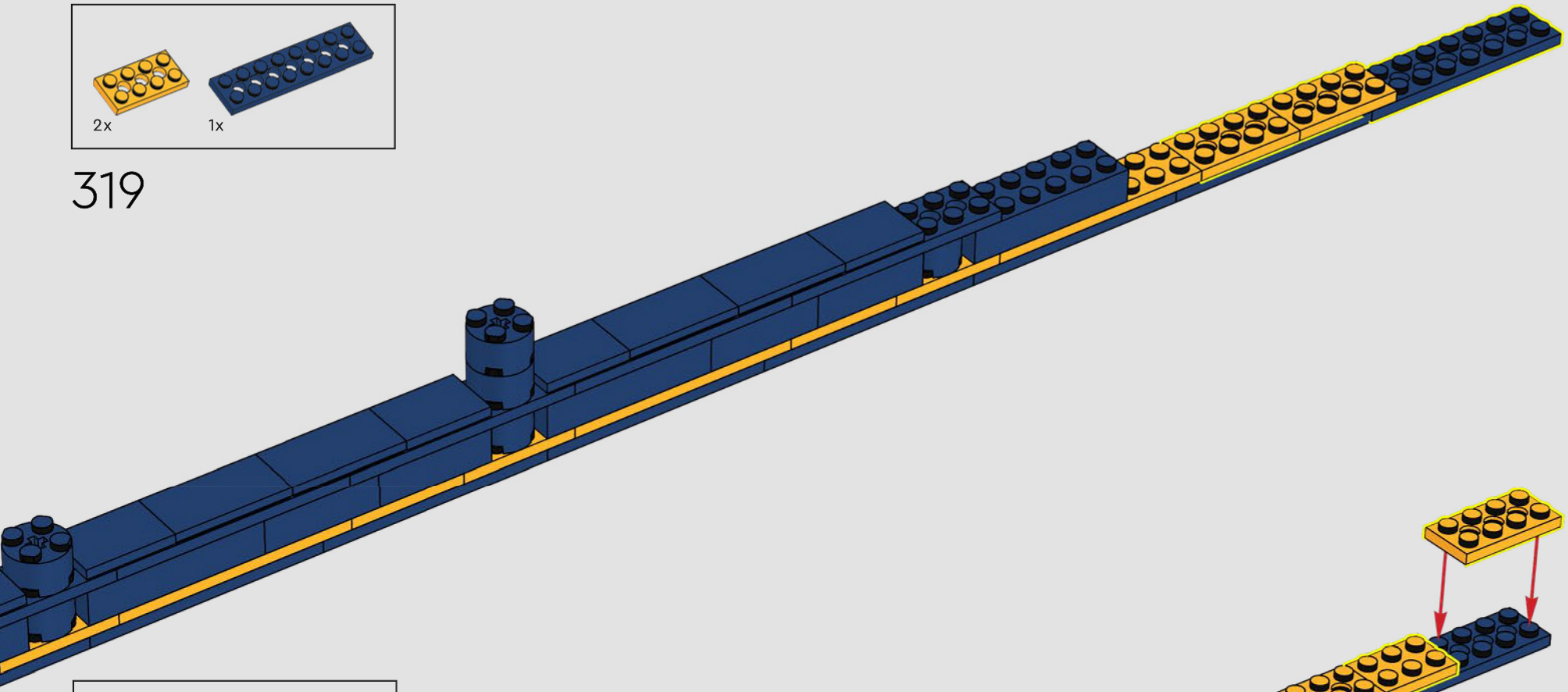

320

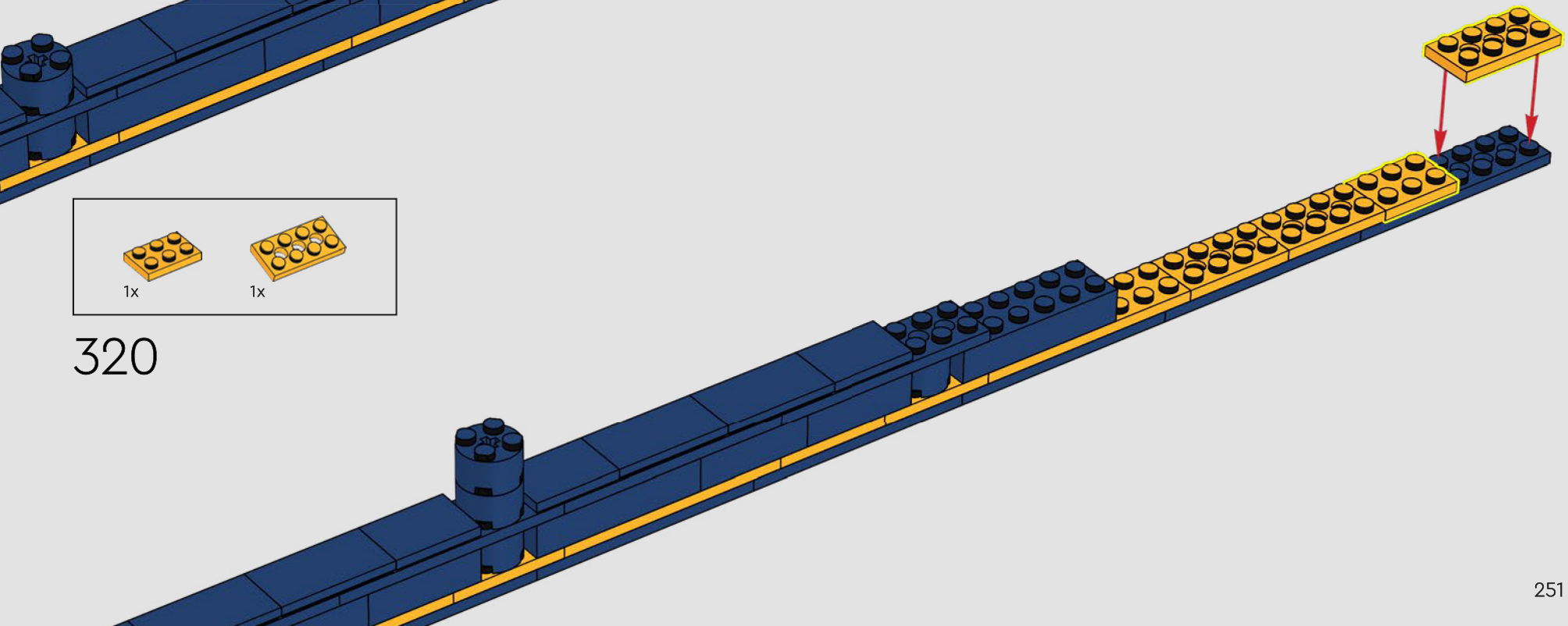

321

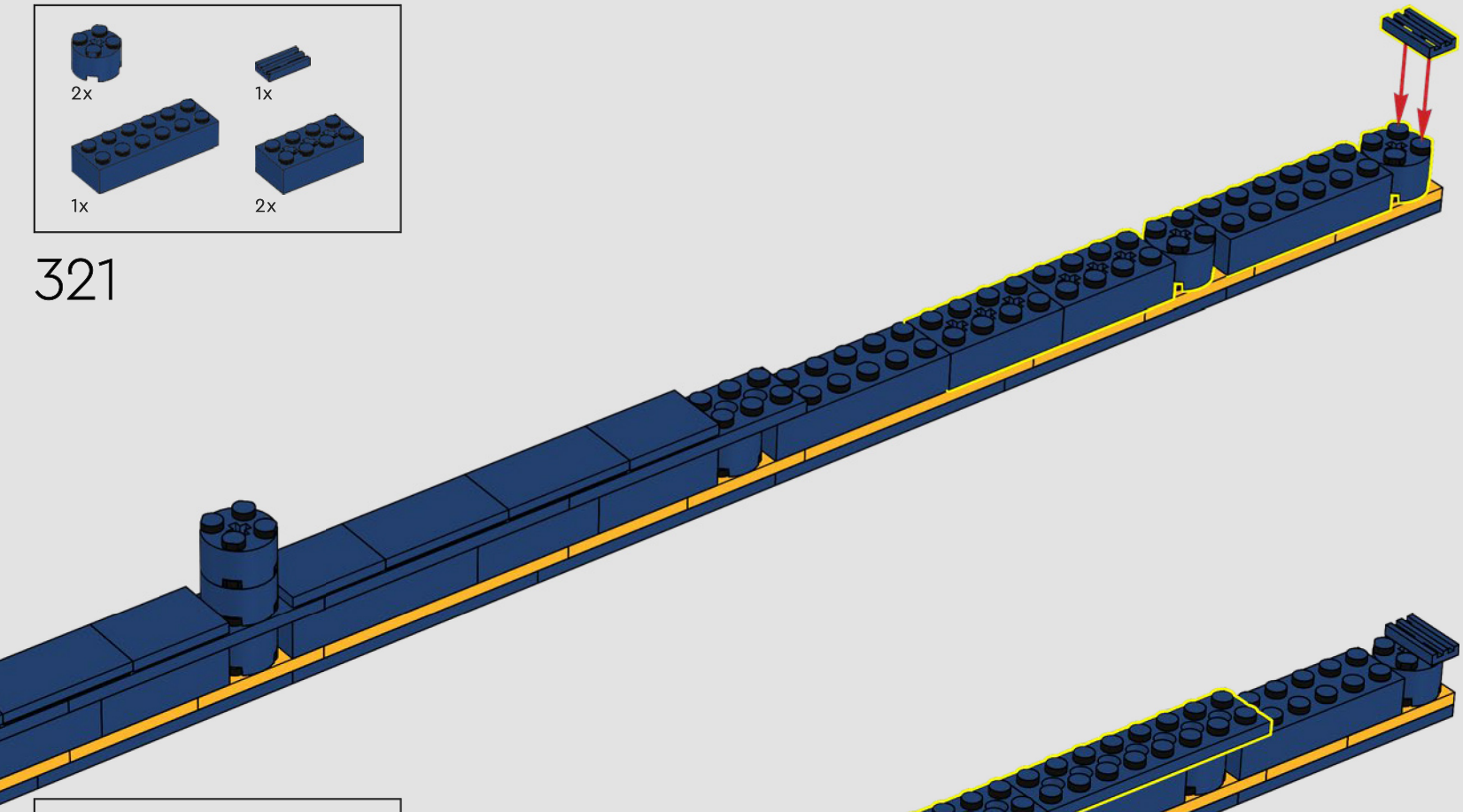

322

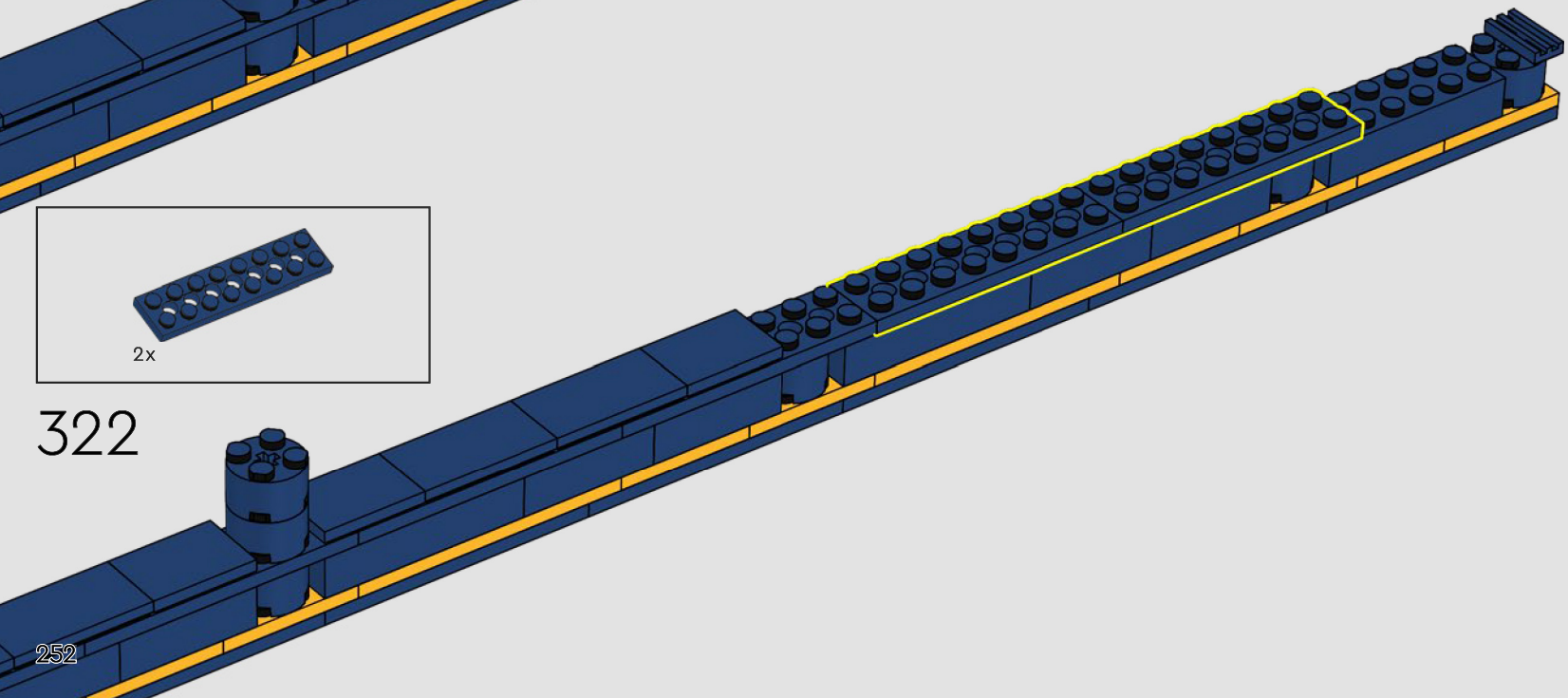

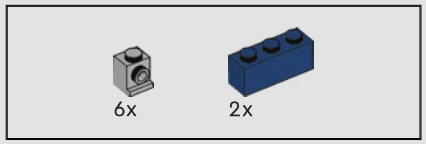

323

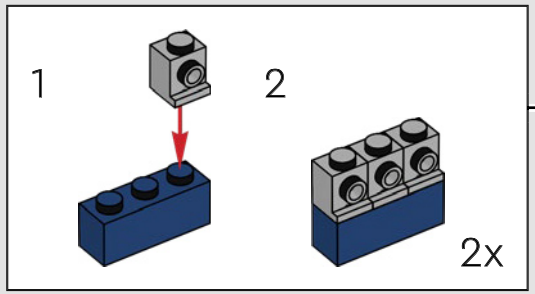

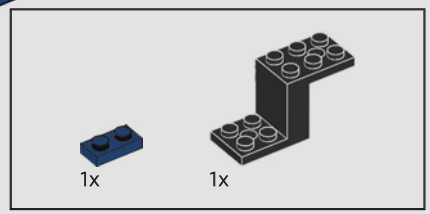

324

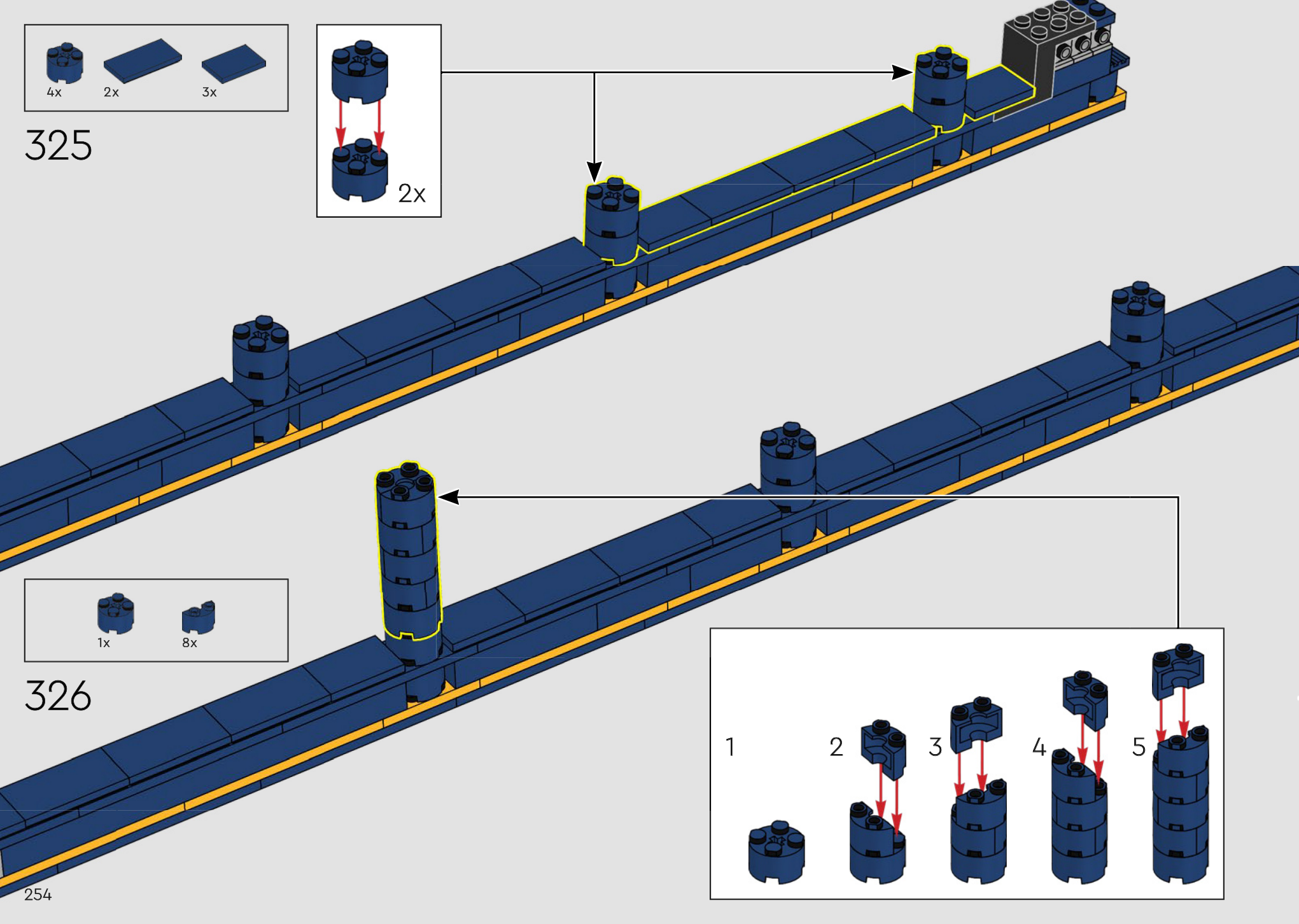
4x
2x
3x
325
2x
1x
8x
326
1
2
3
4
5

327

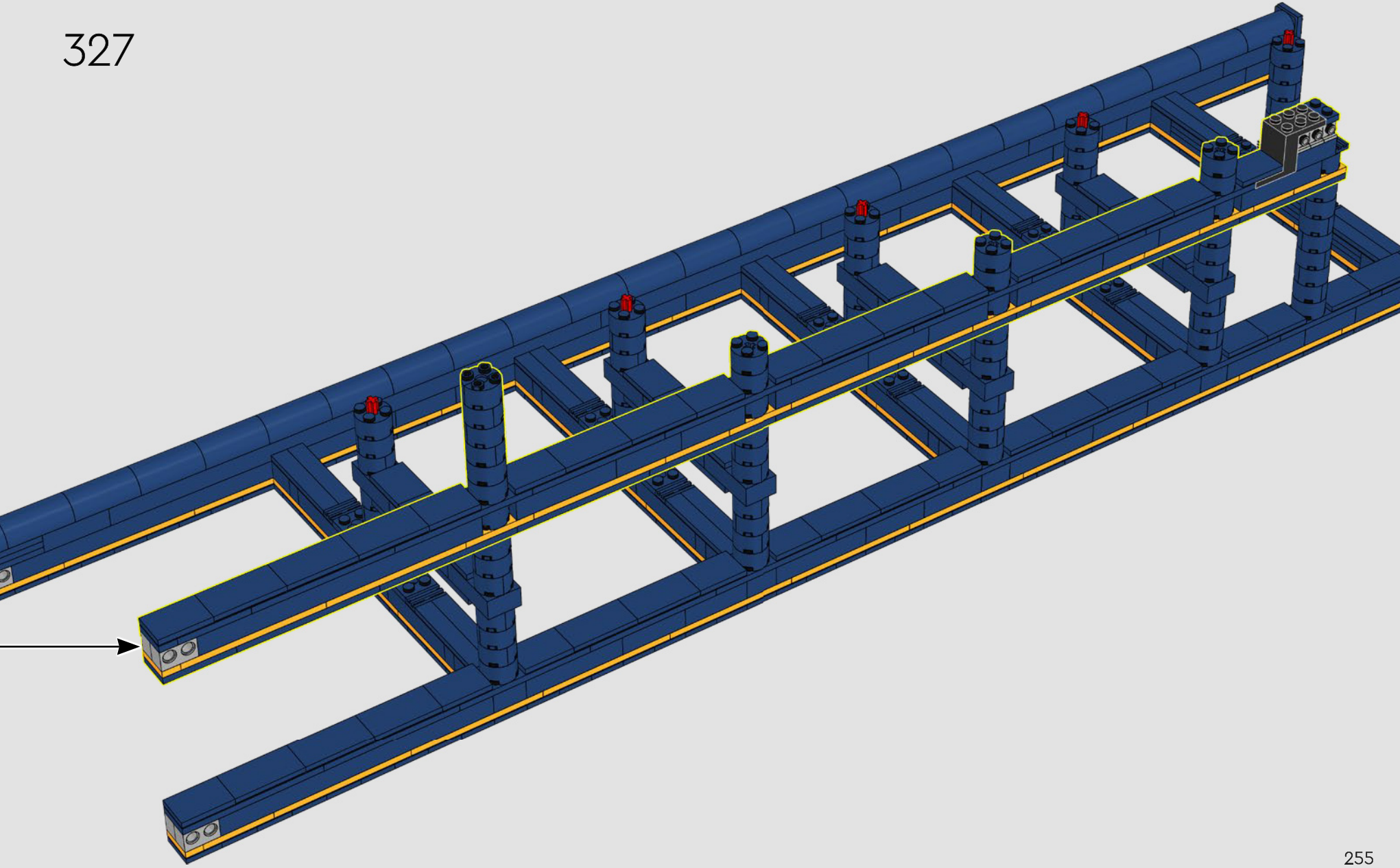

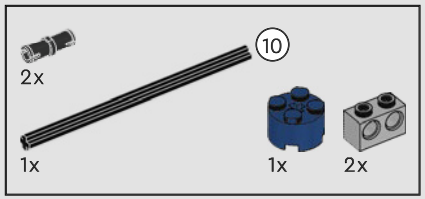

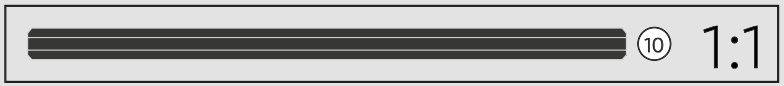

328

1

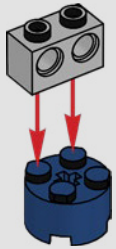

2

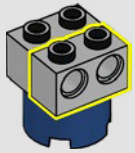

3

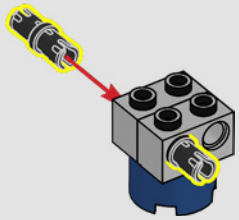

4

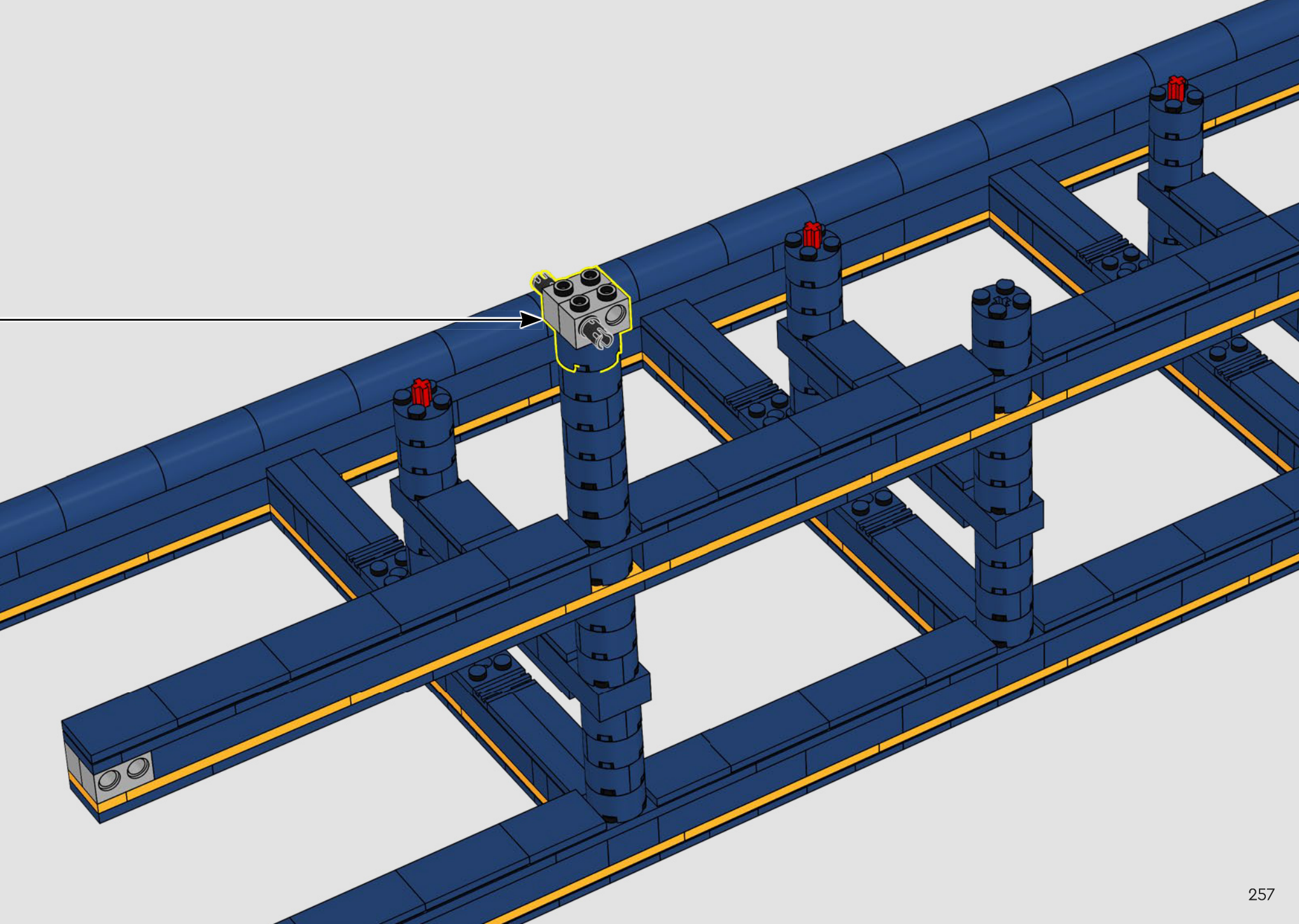

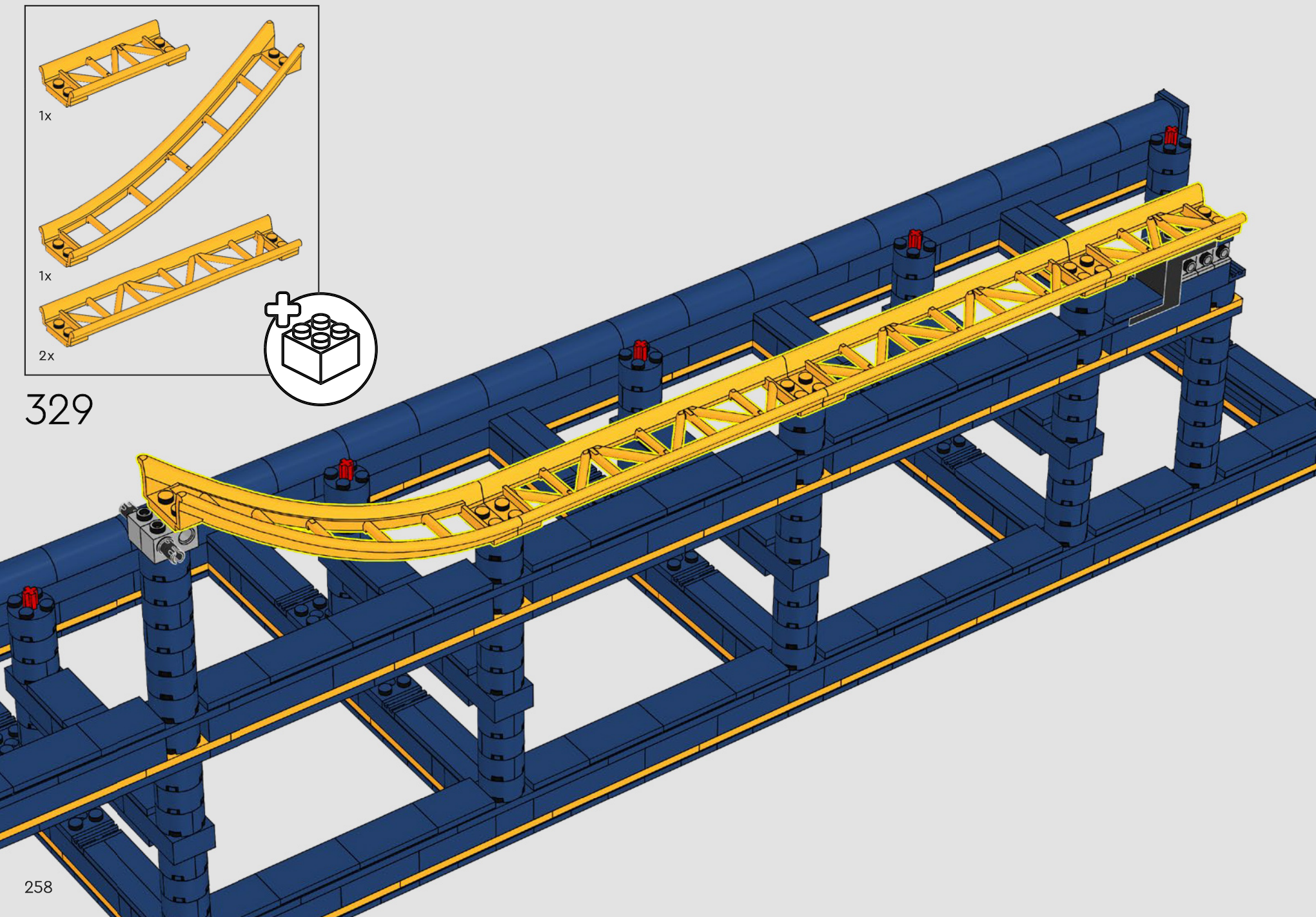

329

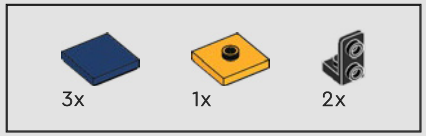

330

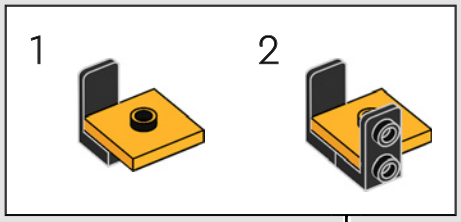

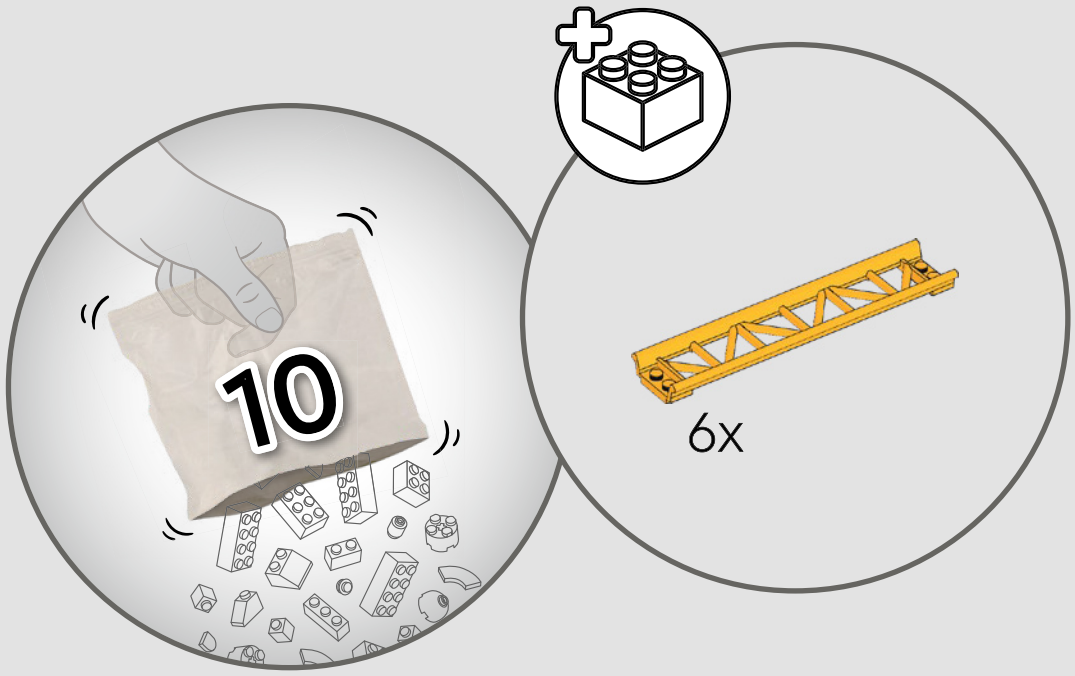

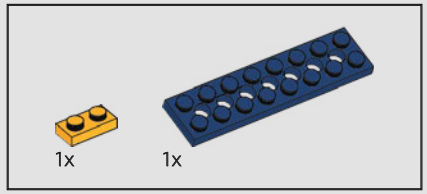

331

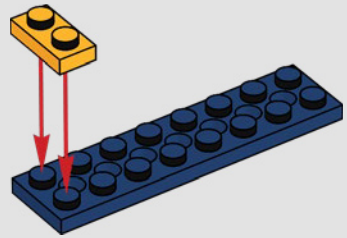

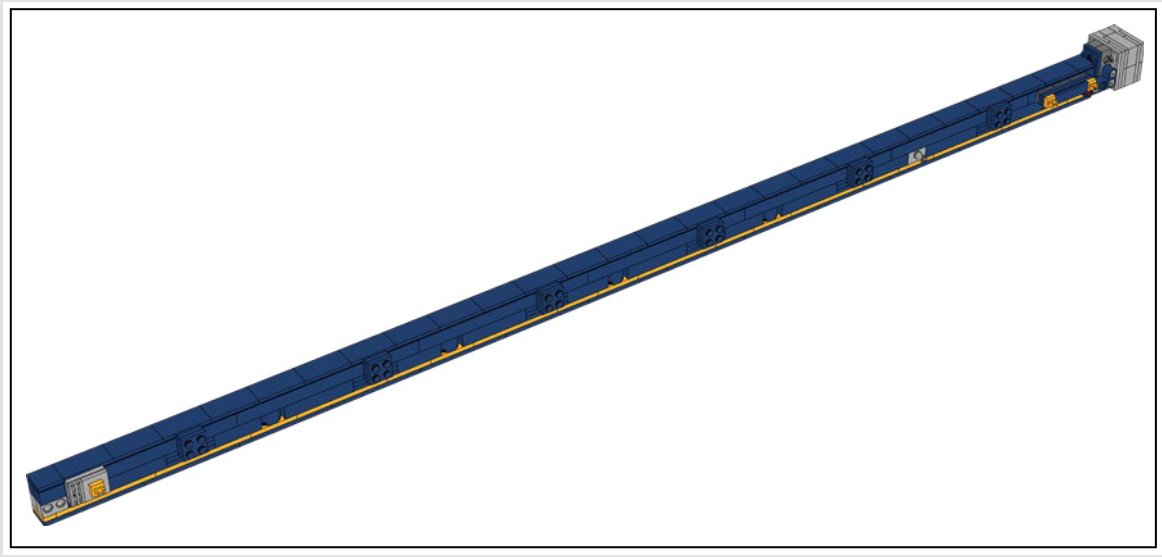

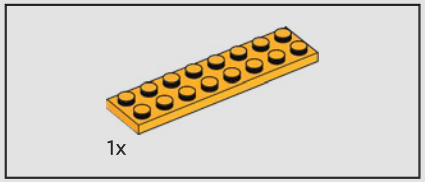

332

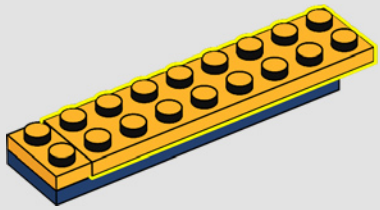

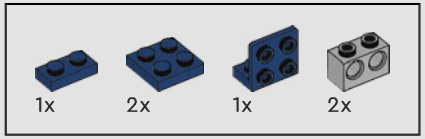

333

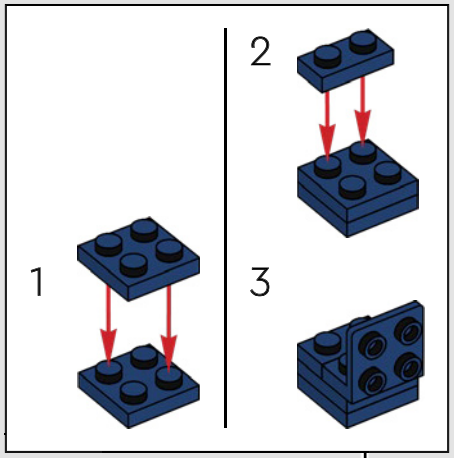

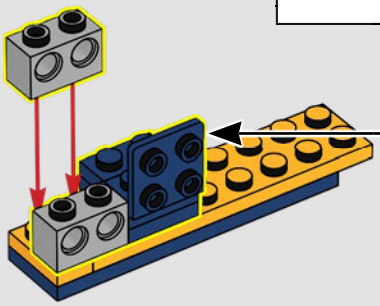

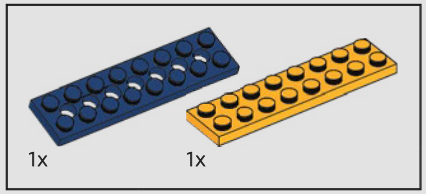

334

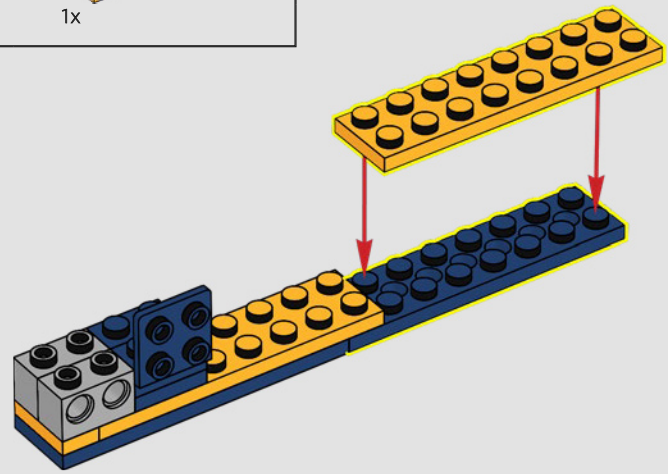

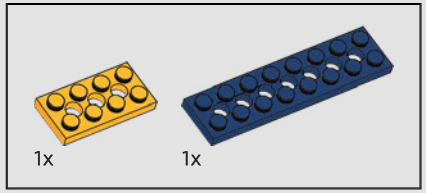

335

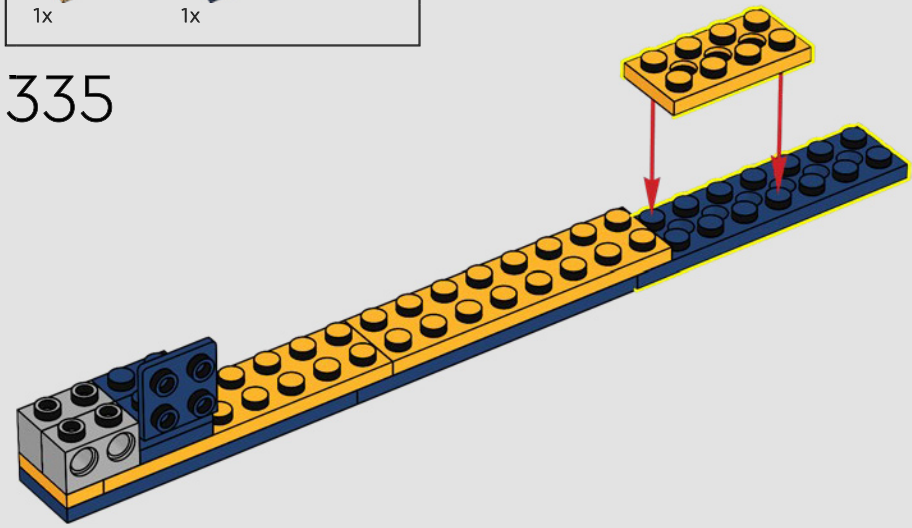

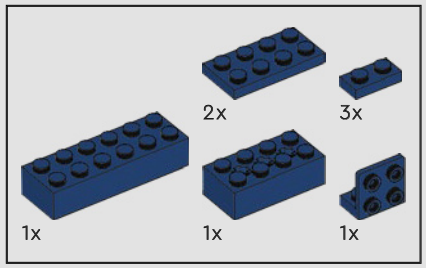

336

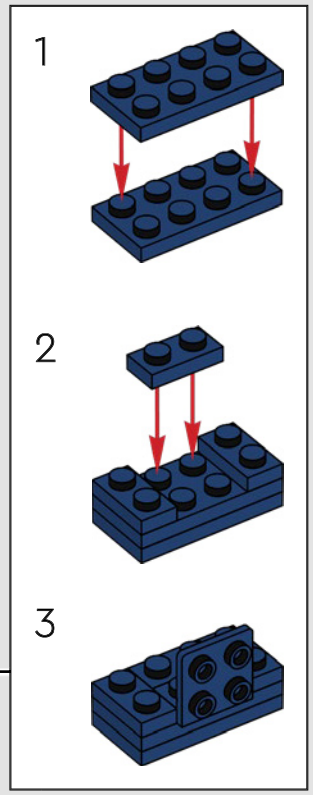

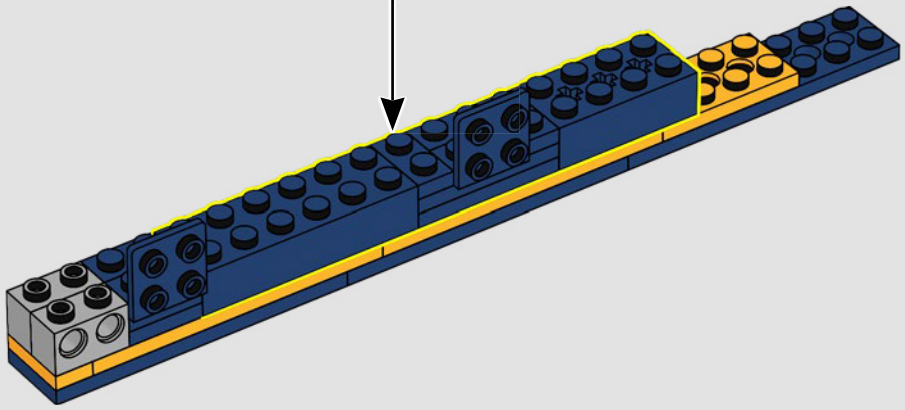

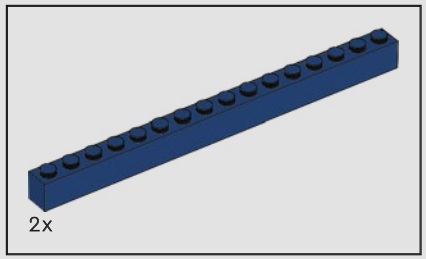

337

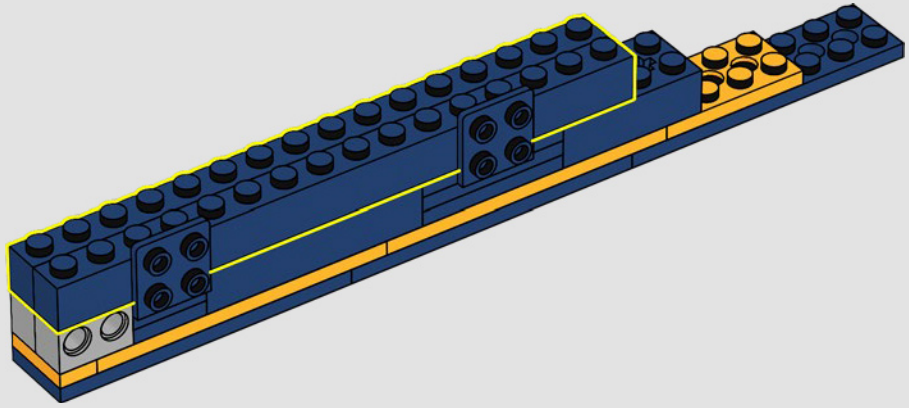

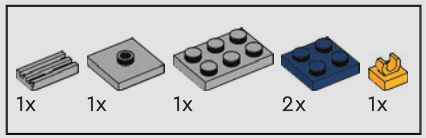

338

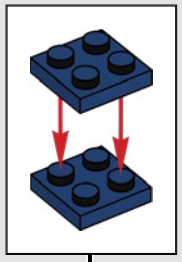

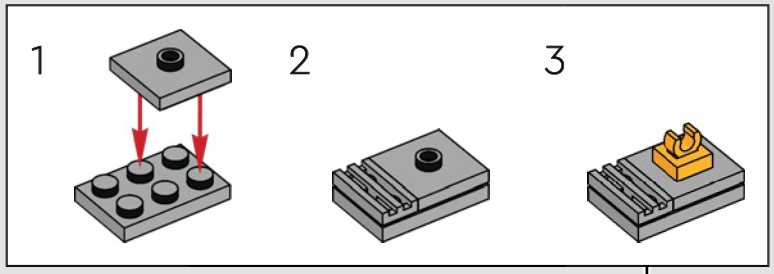

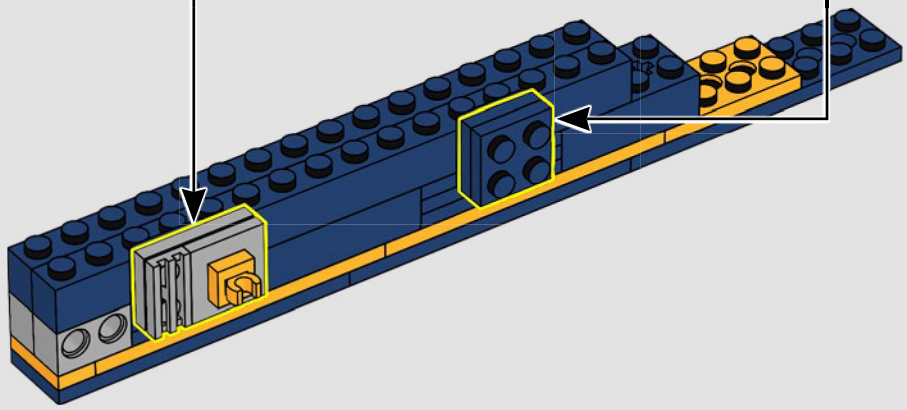

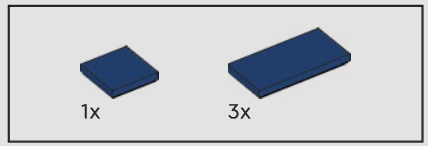

339

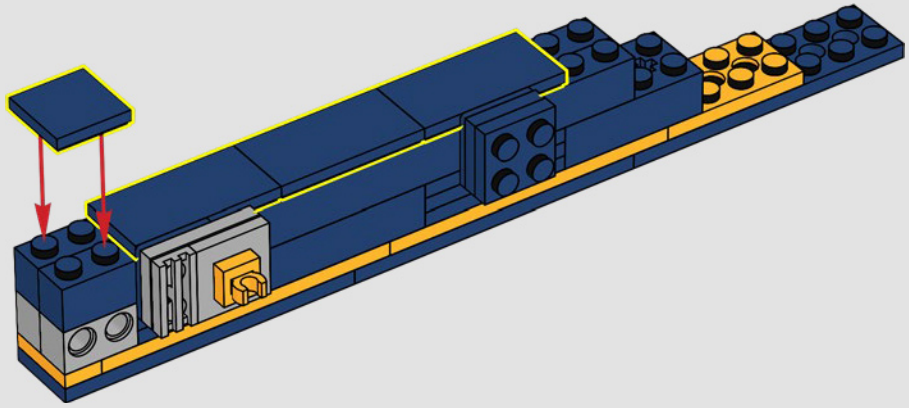

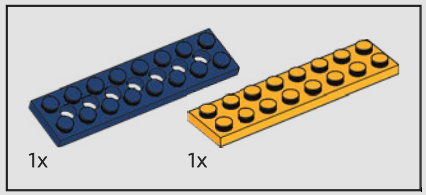

340

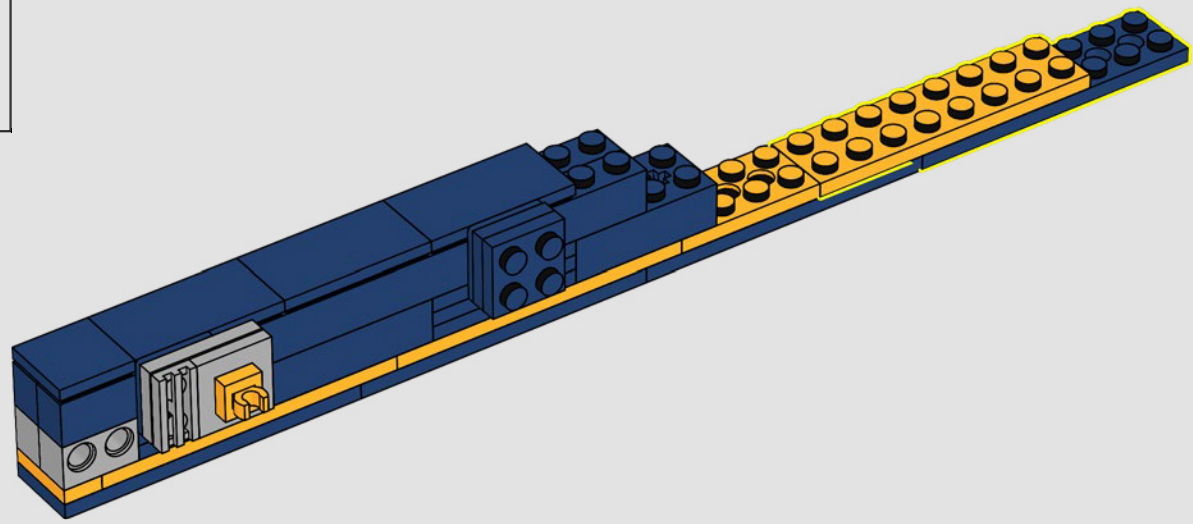

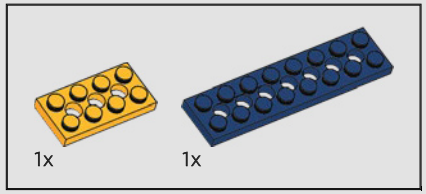

341

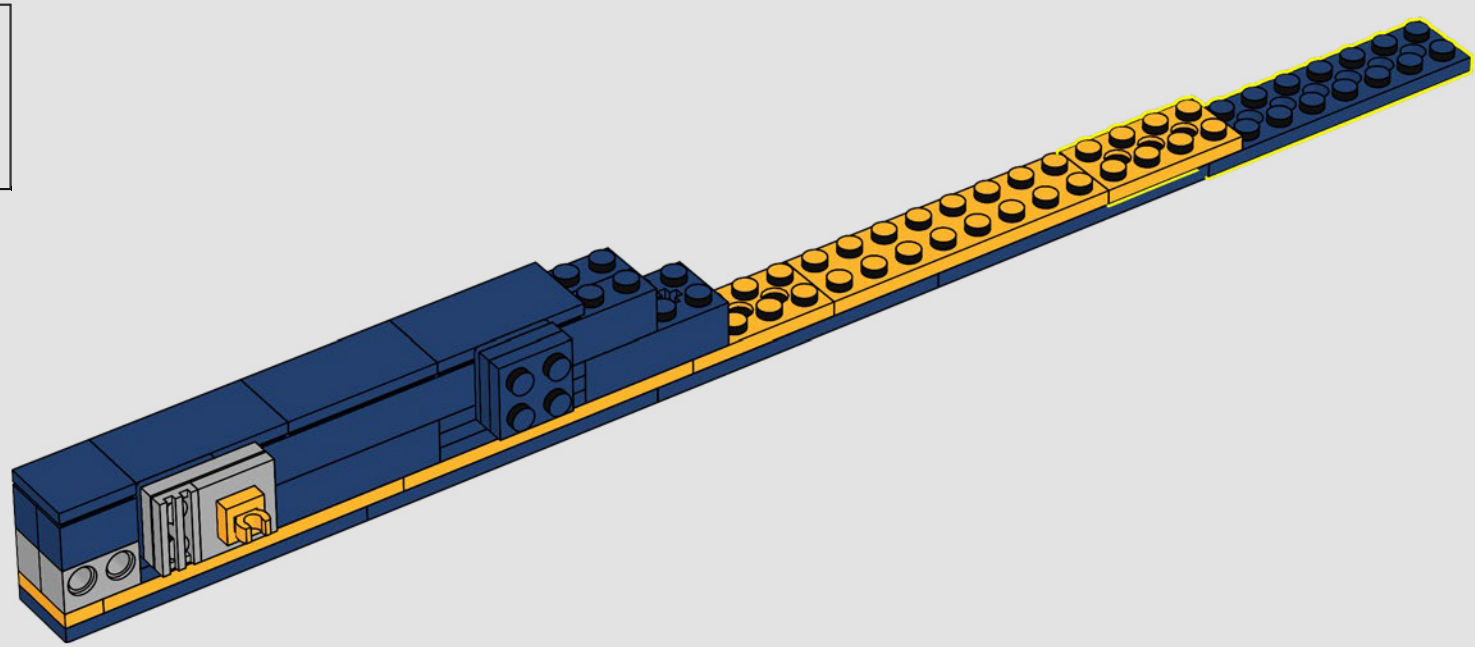

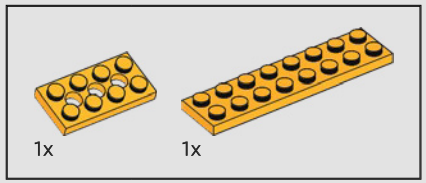

342

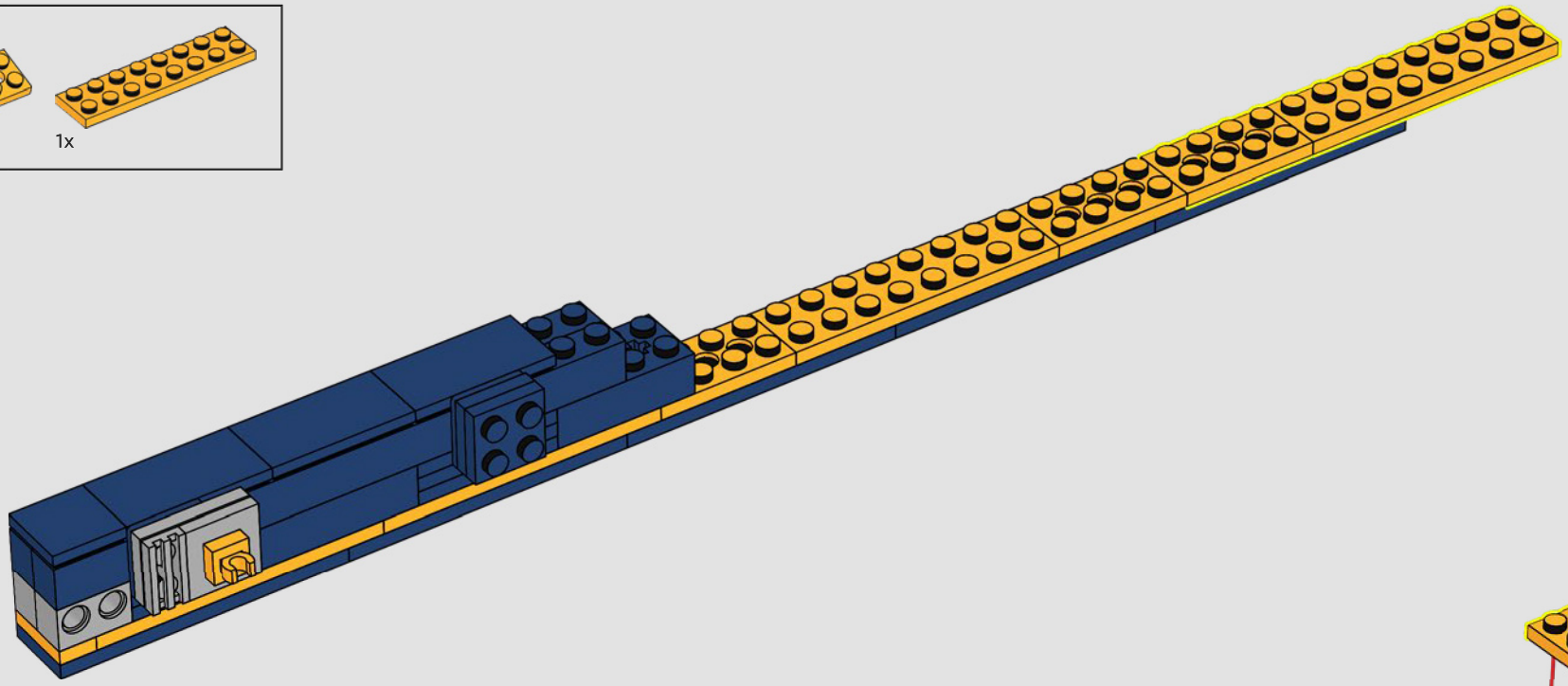

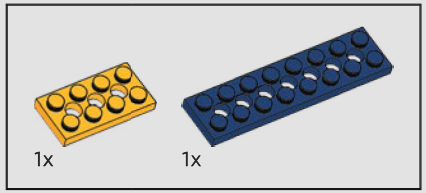

343

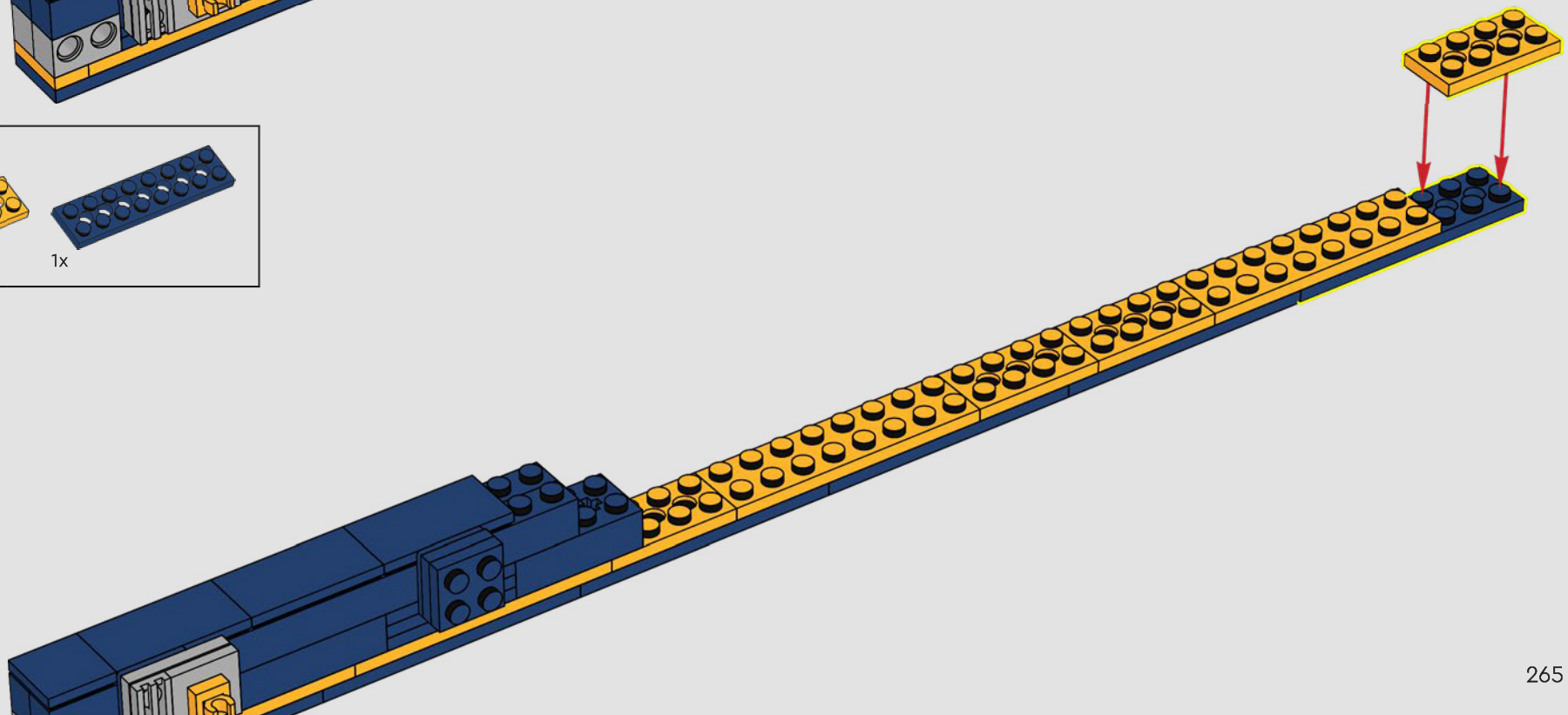

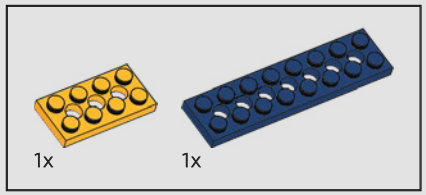

344

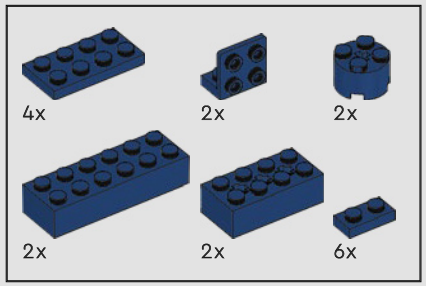

345

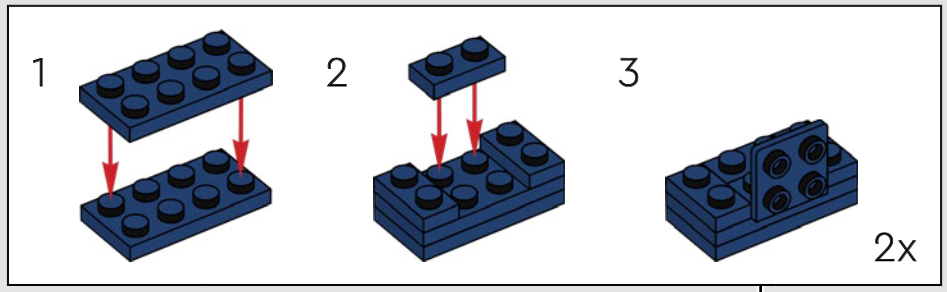

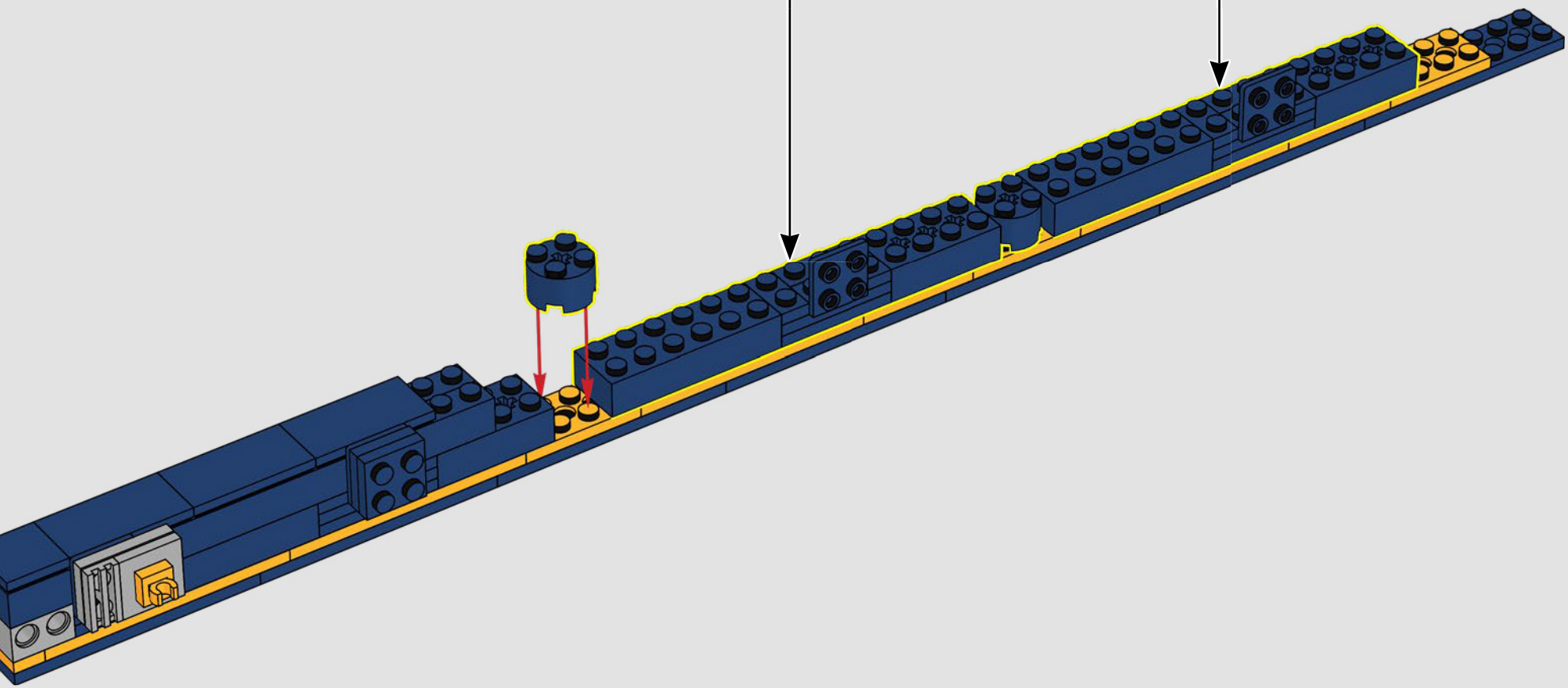

346

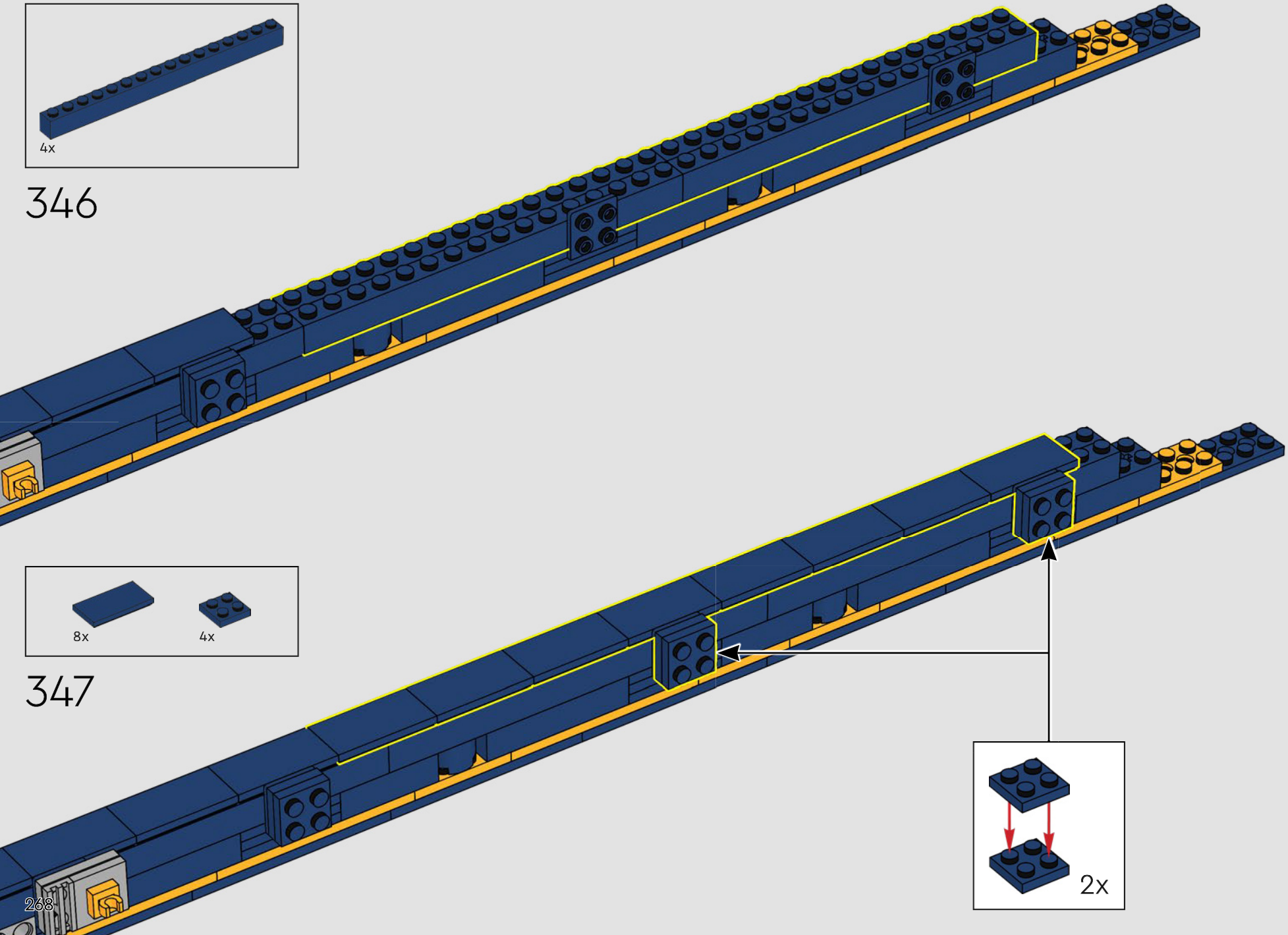

347

348

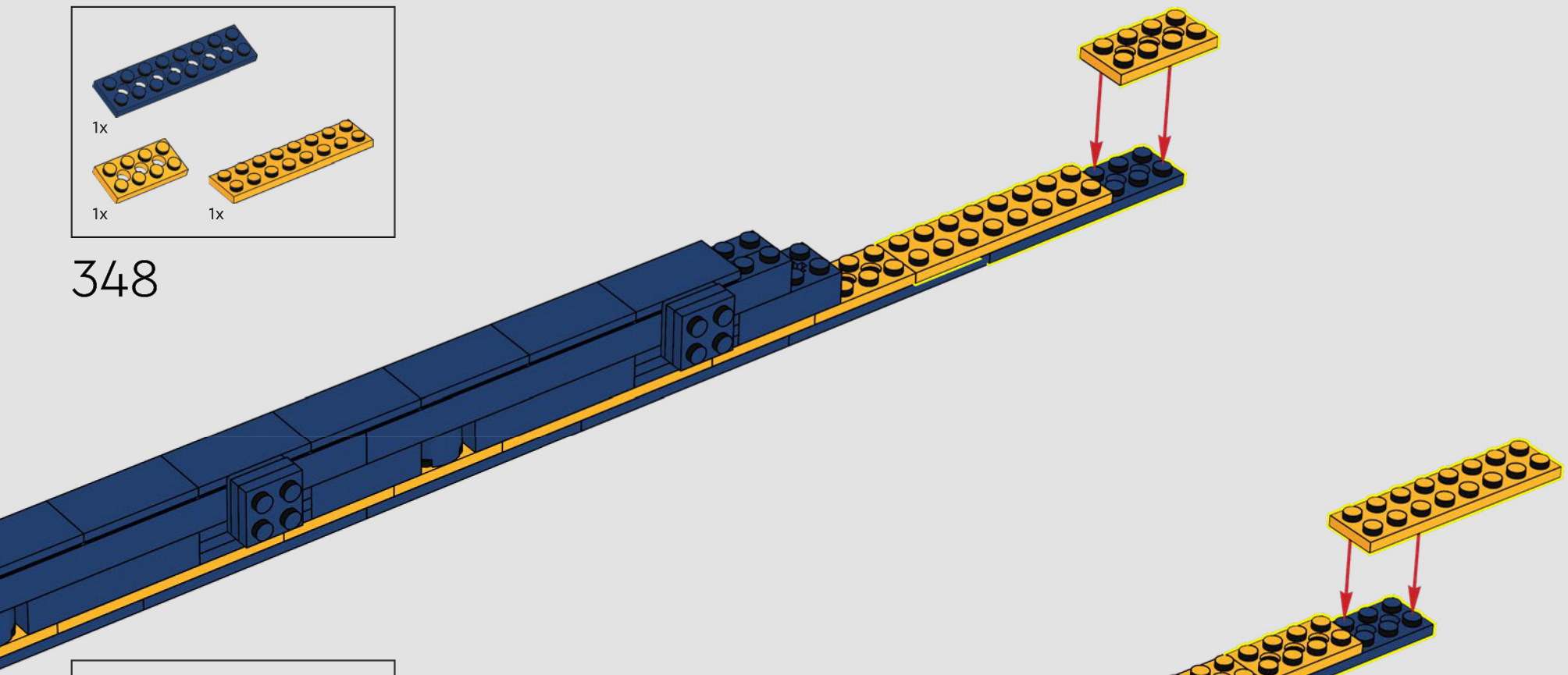

349

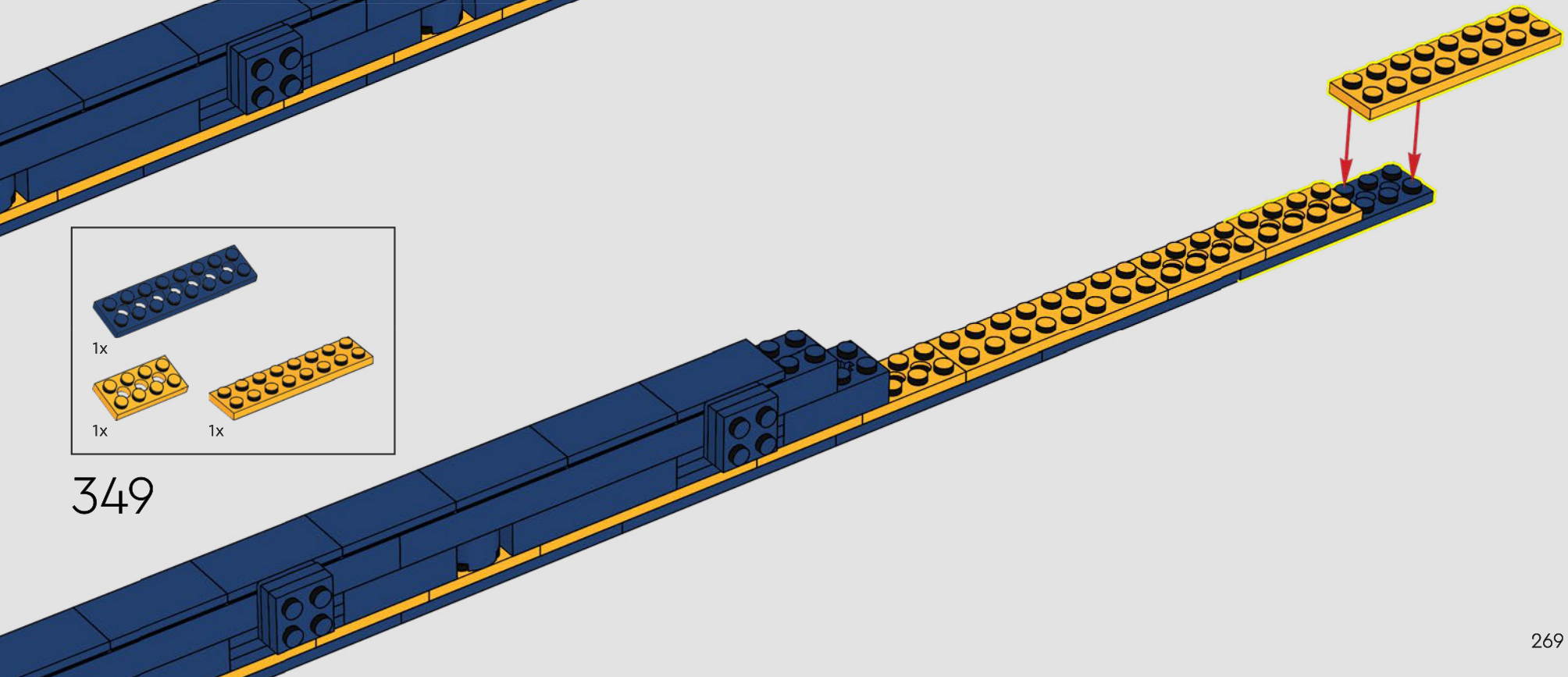

350

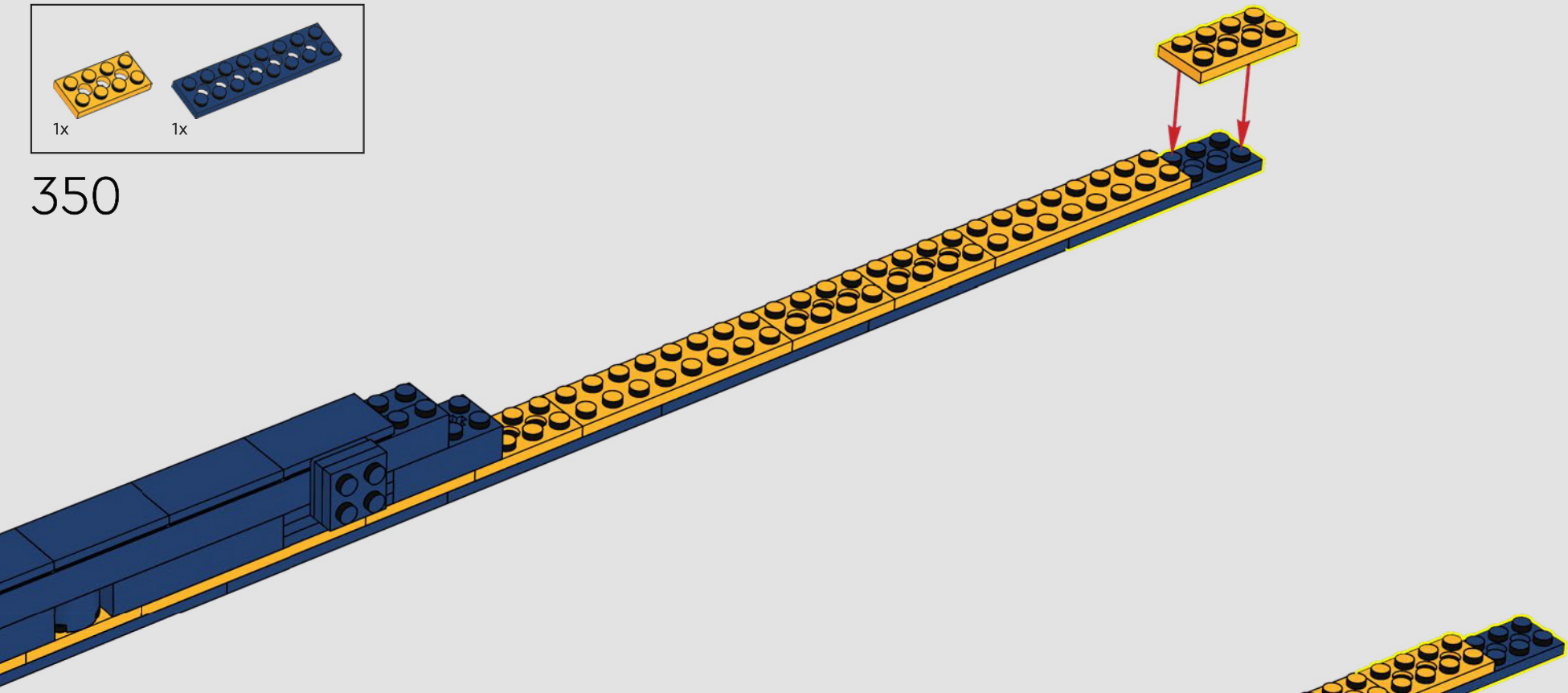

351

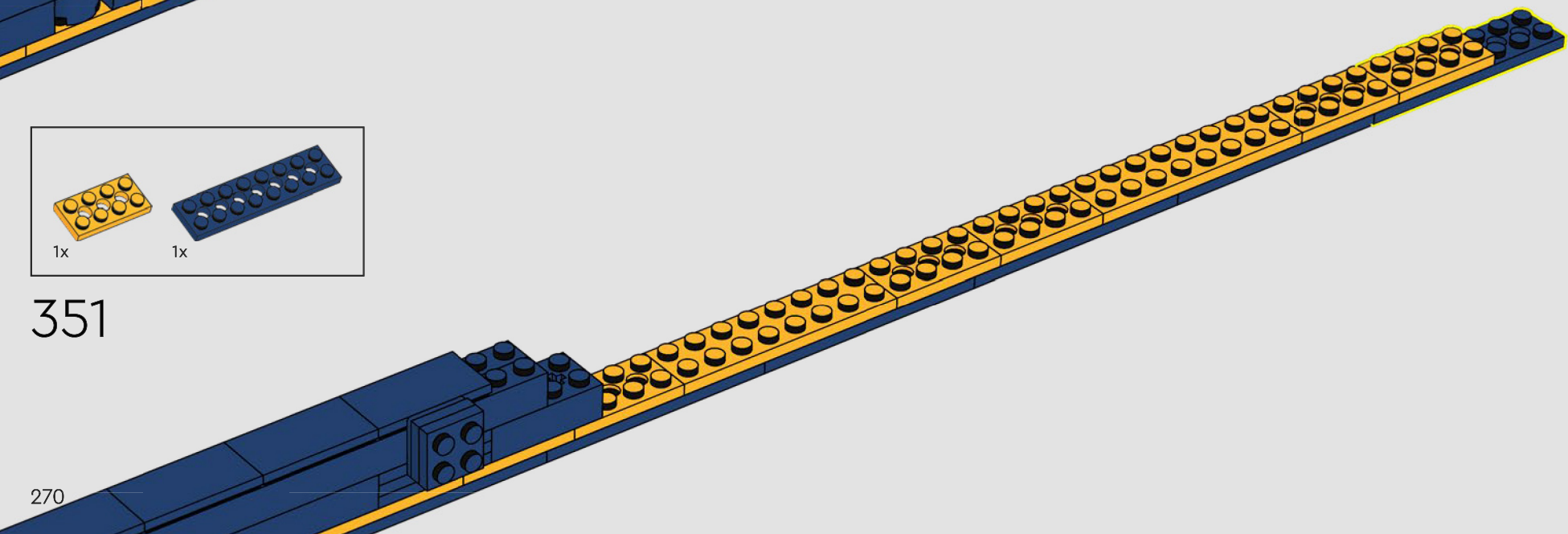

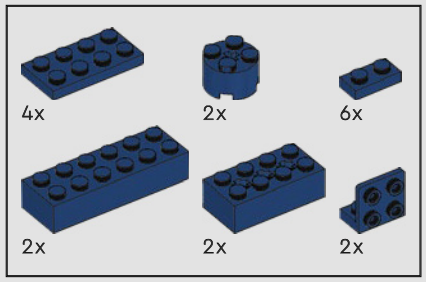

352

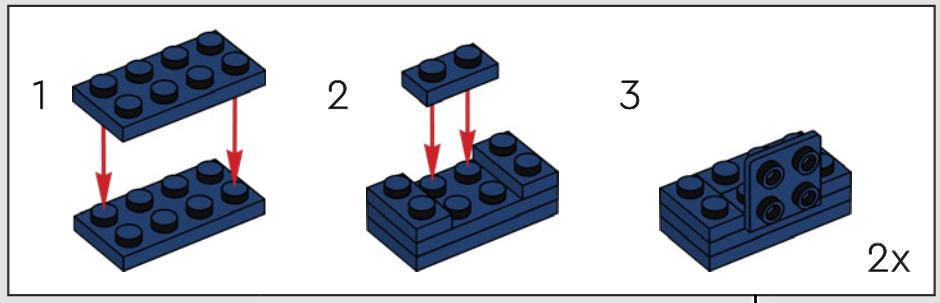

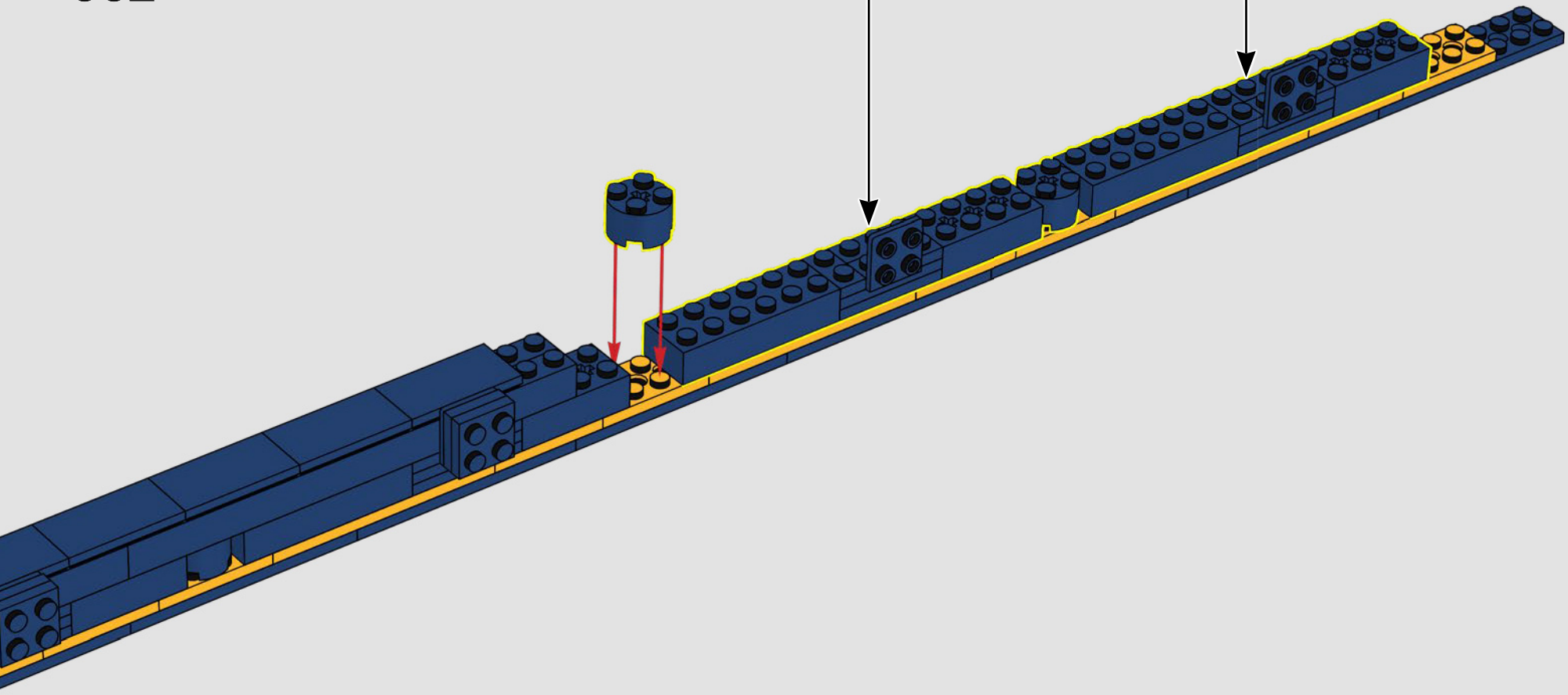

353

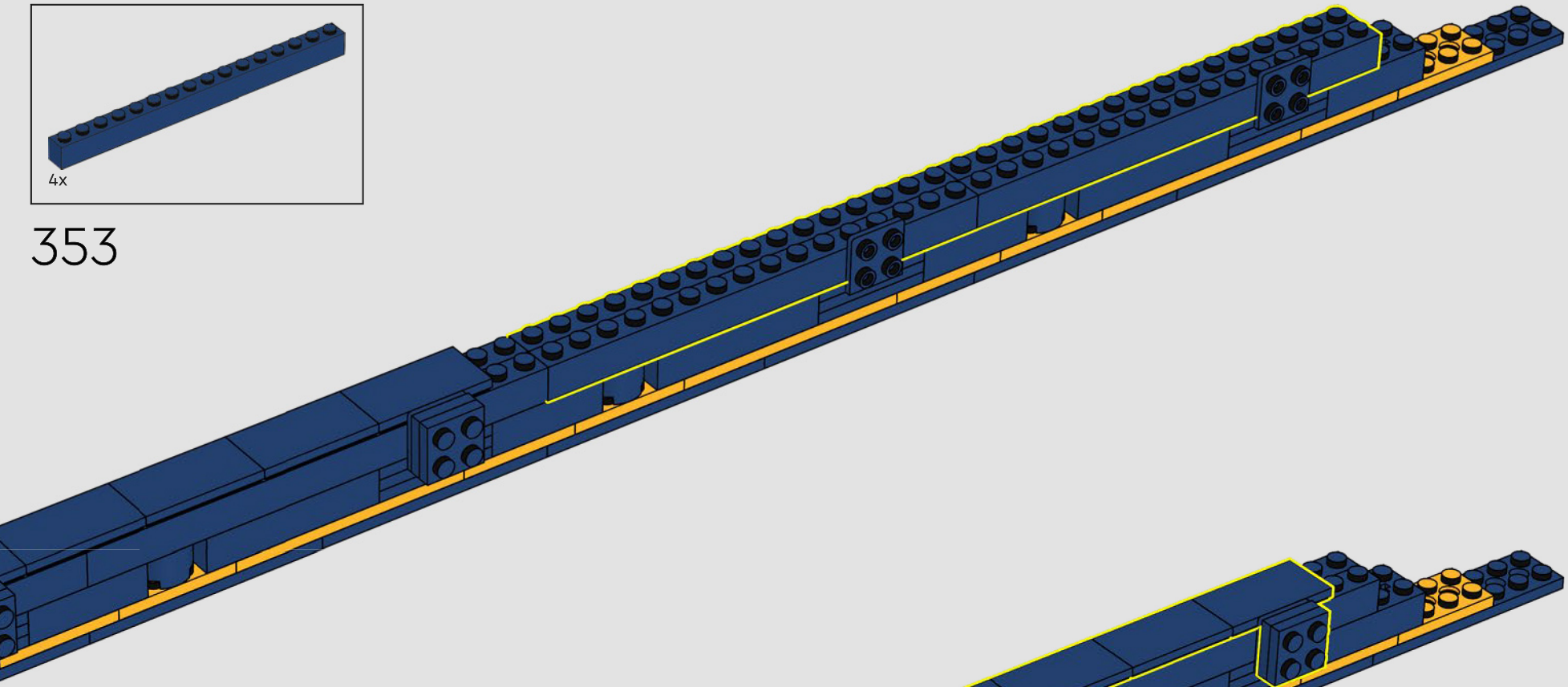

354

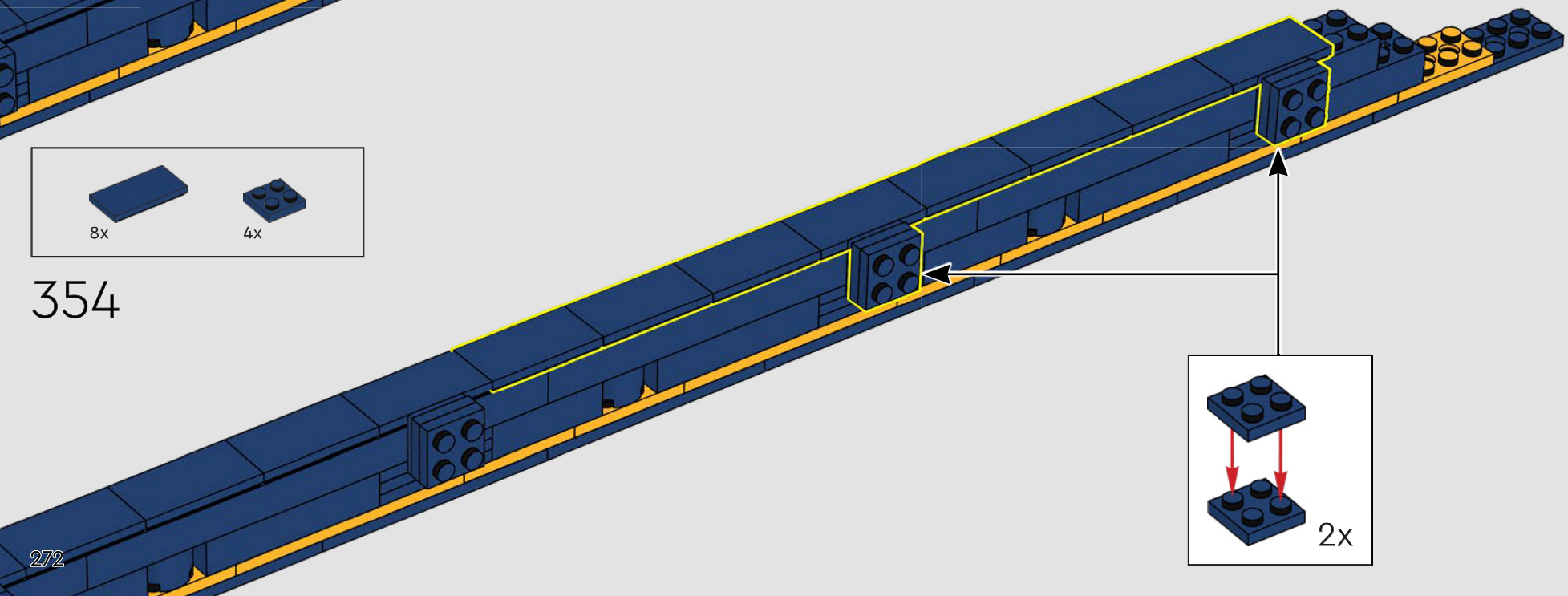

355

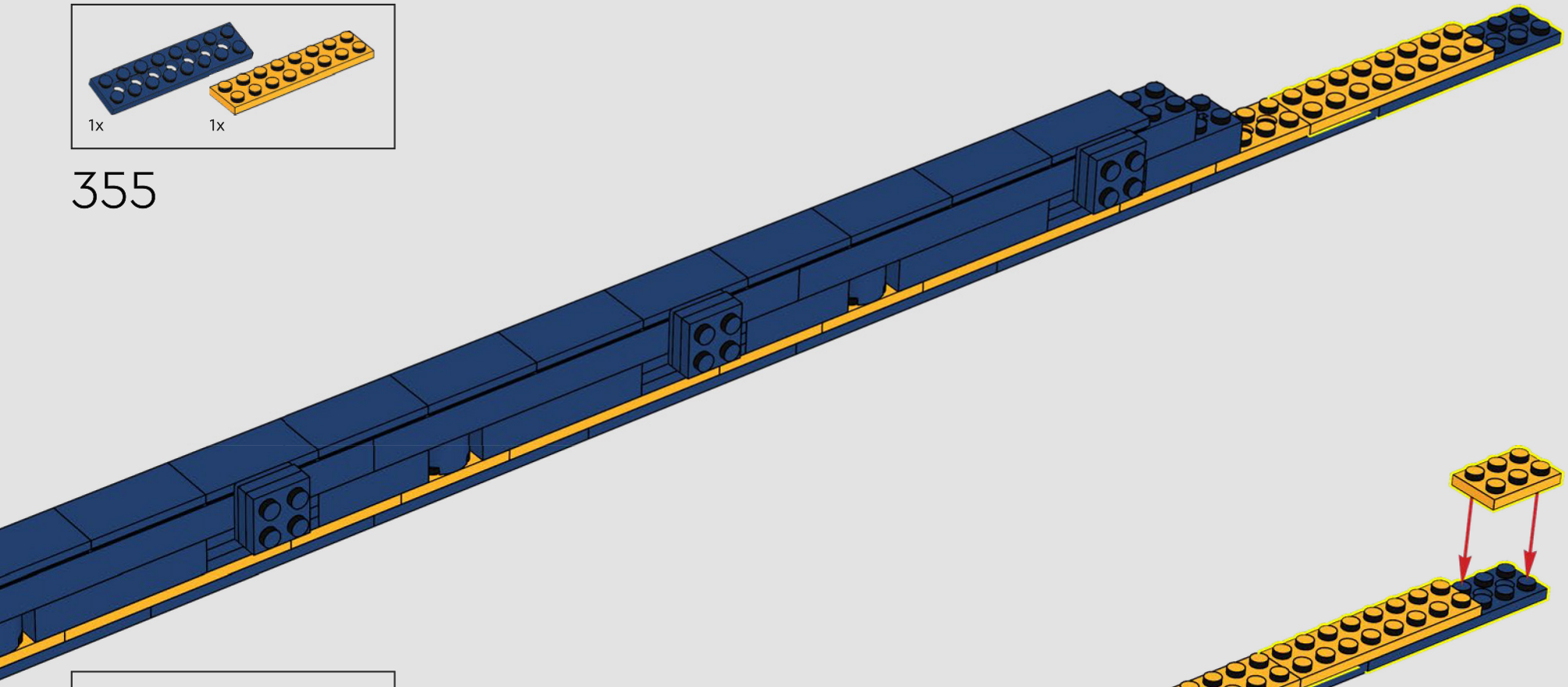

356

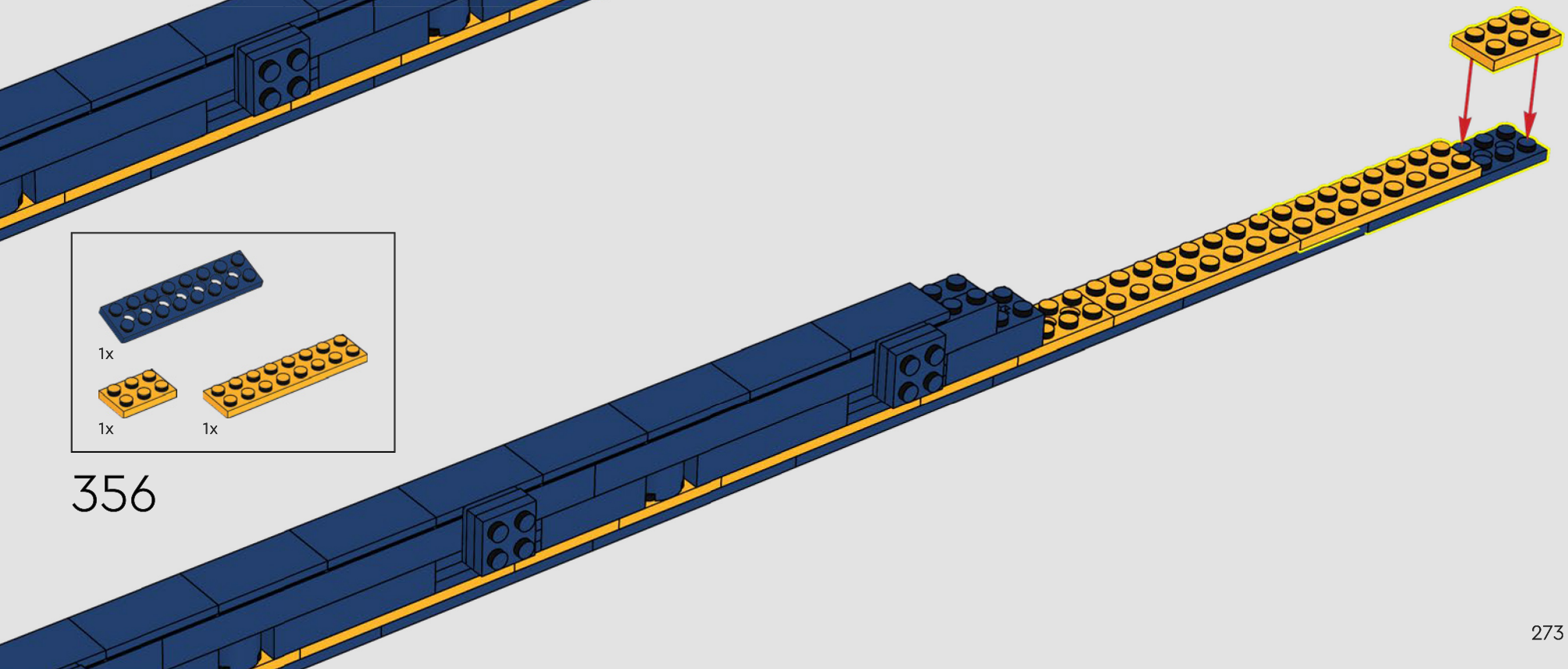

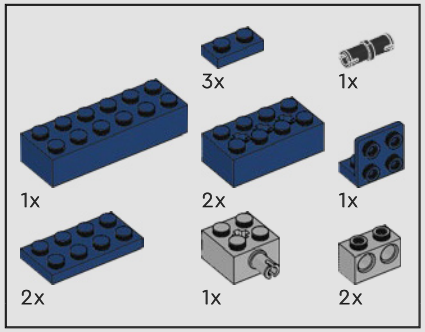

357

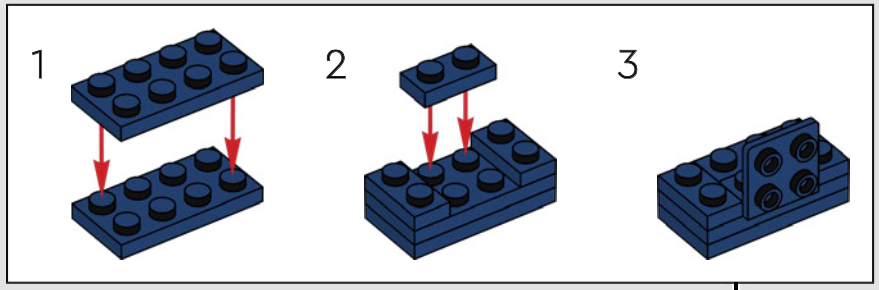

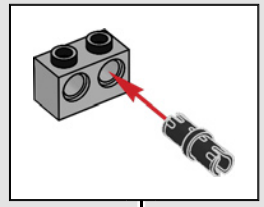

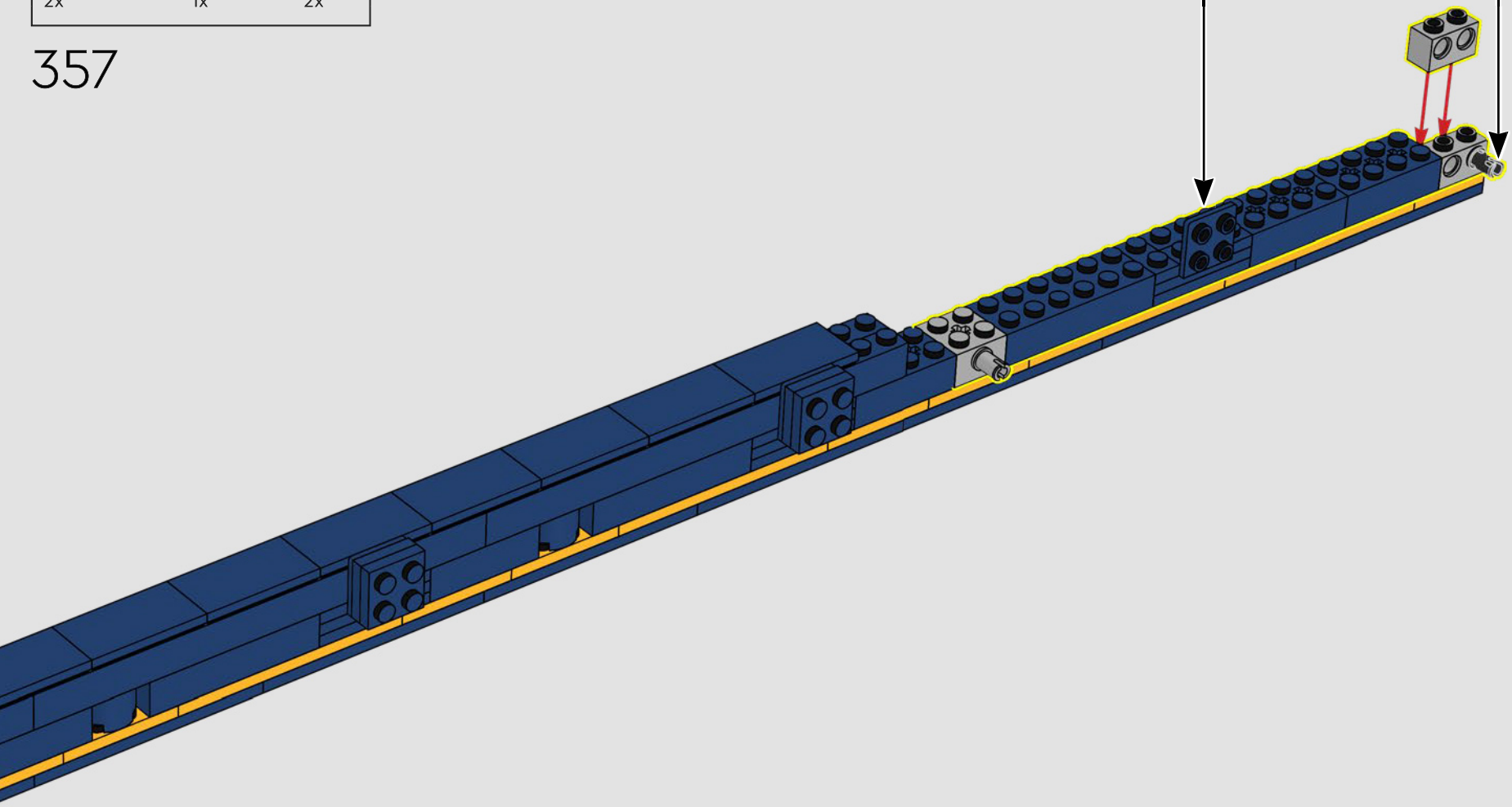

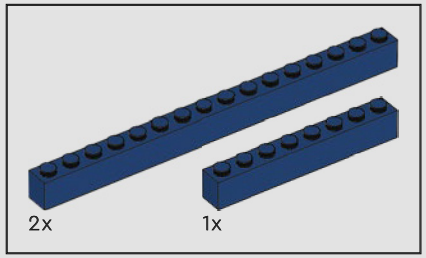

358

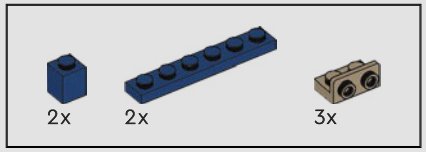

359

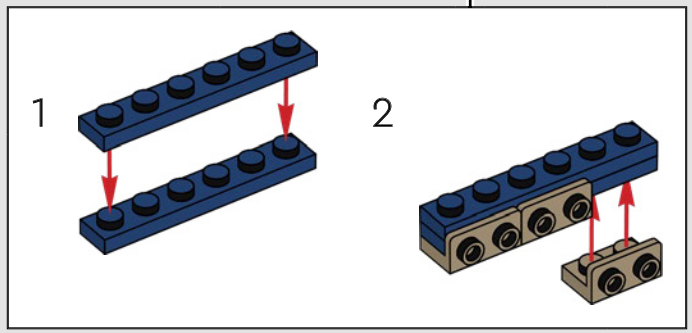

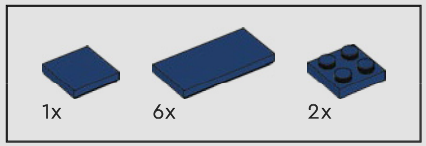

360

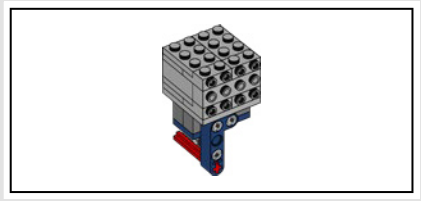

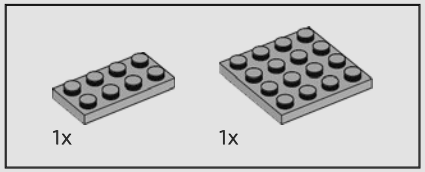

361

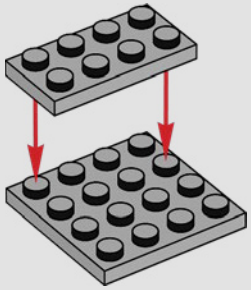

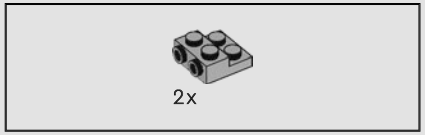

362

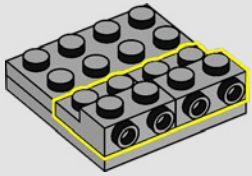

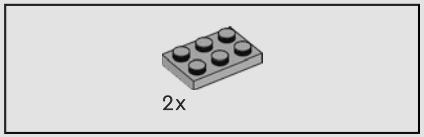

363

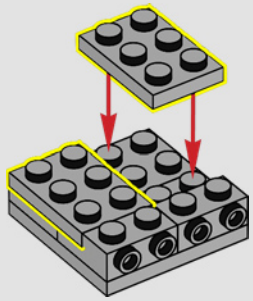

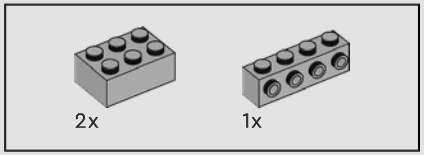

364

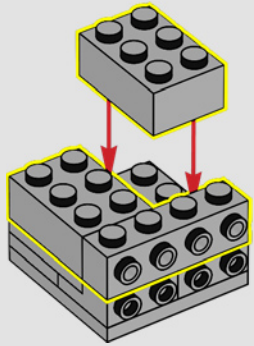

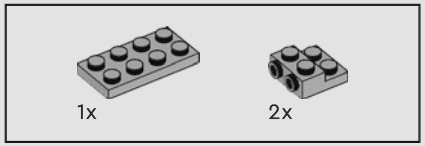

365

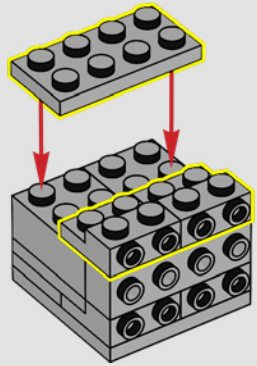

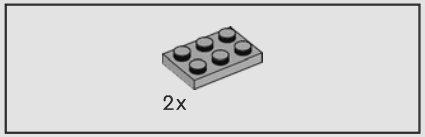

366

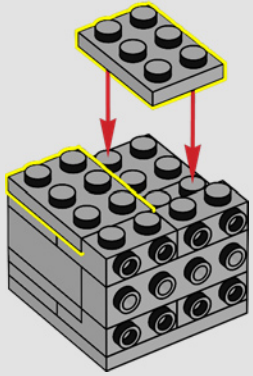

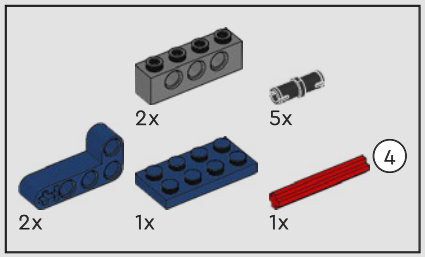

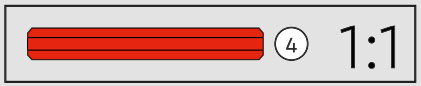

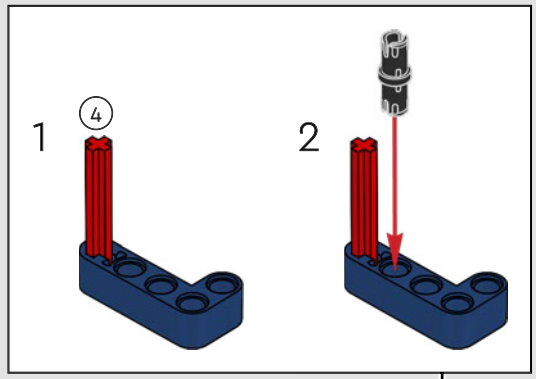

367

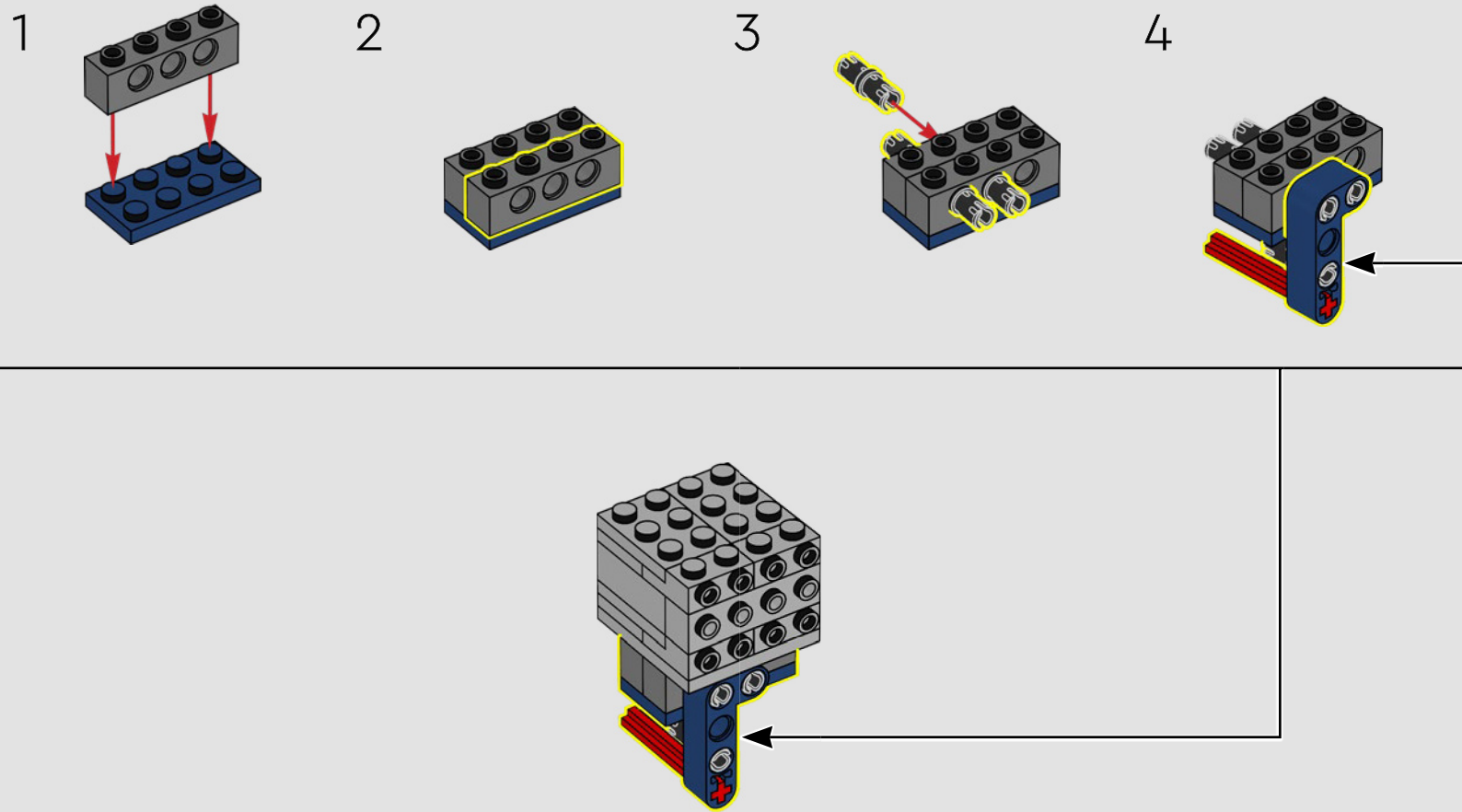

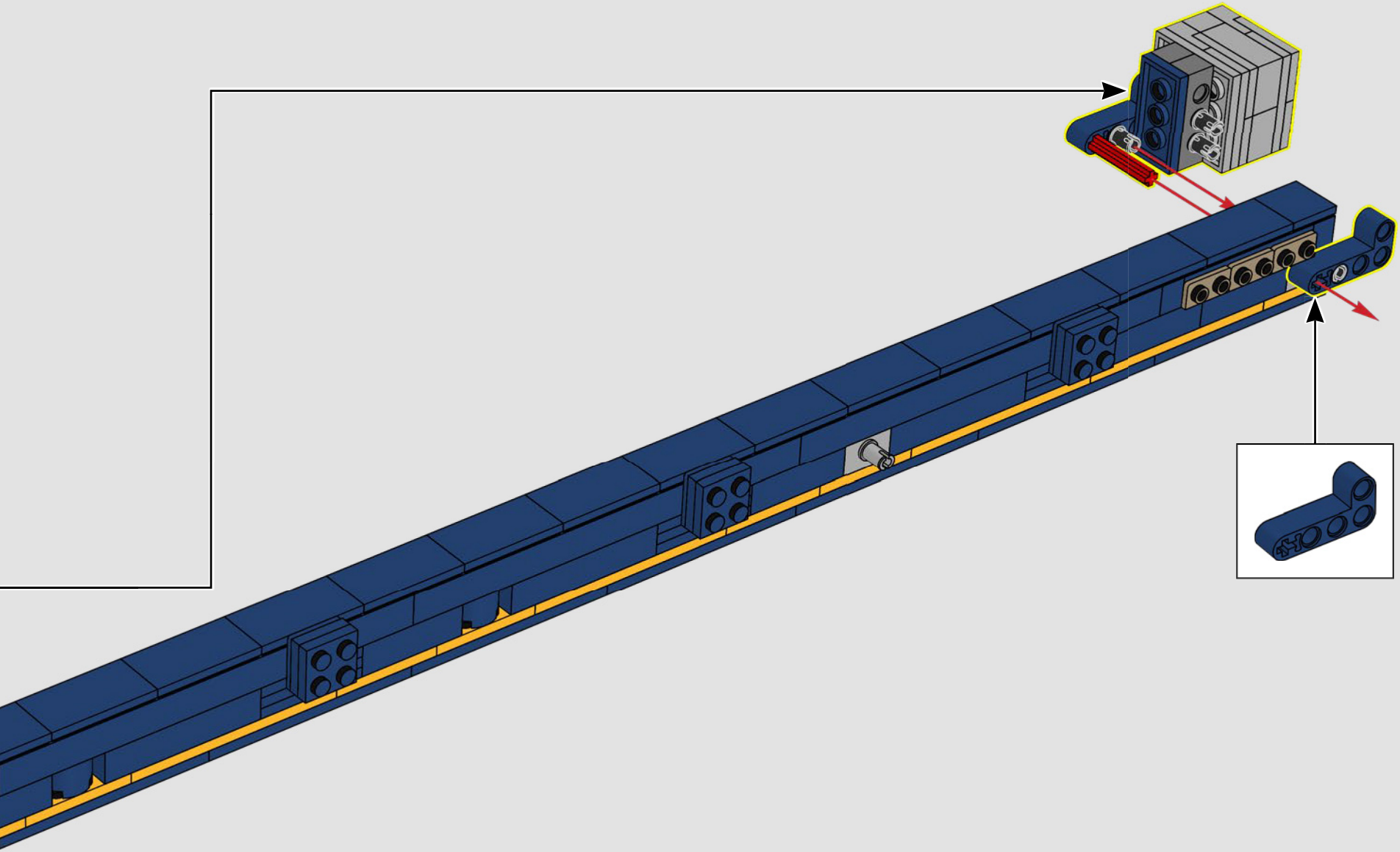

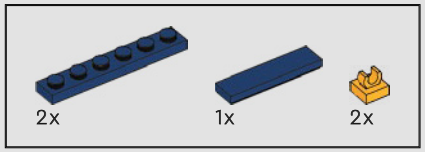

368

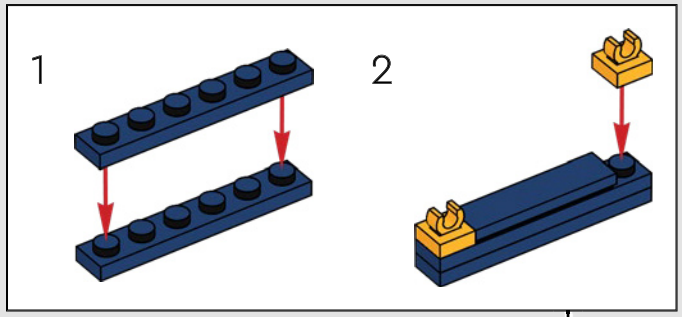

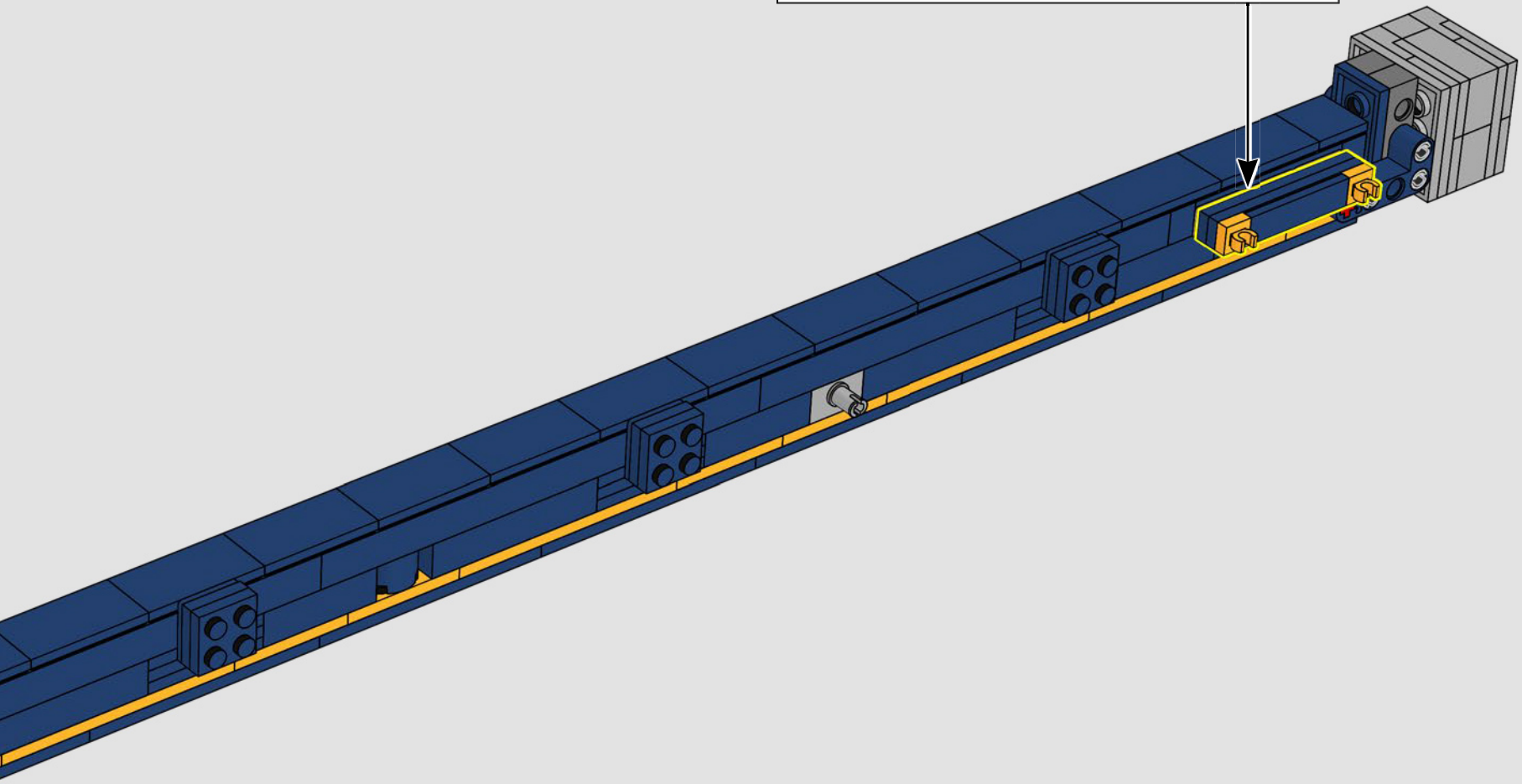

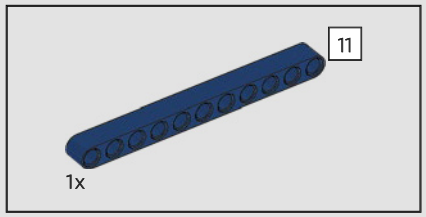

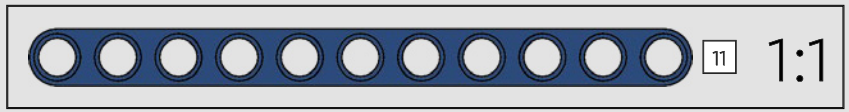

369

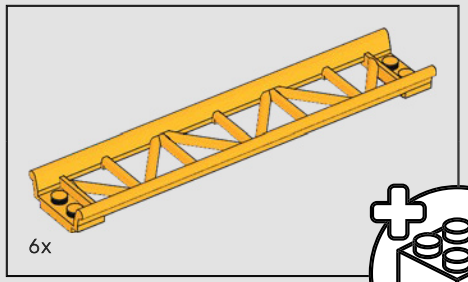

370

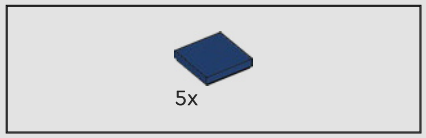

371

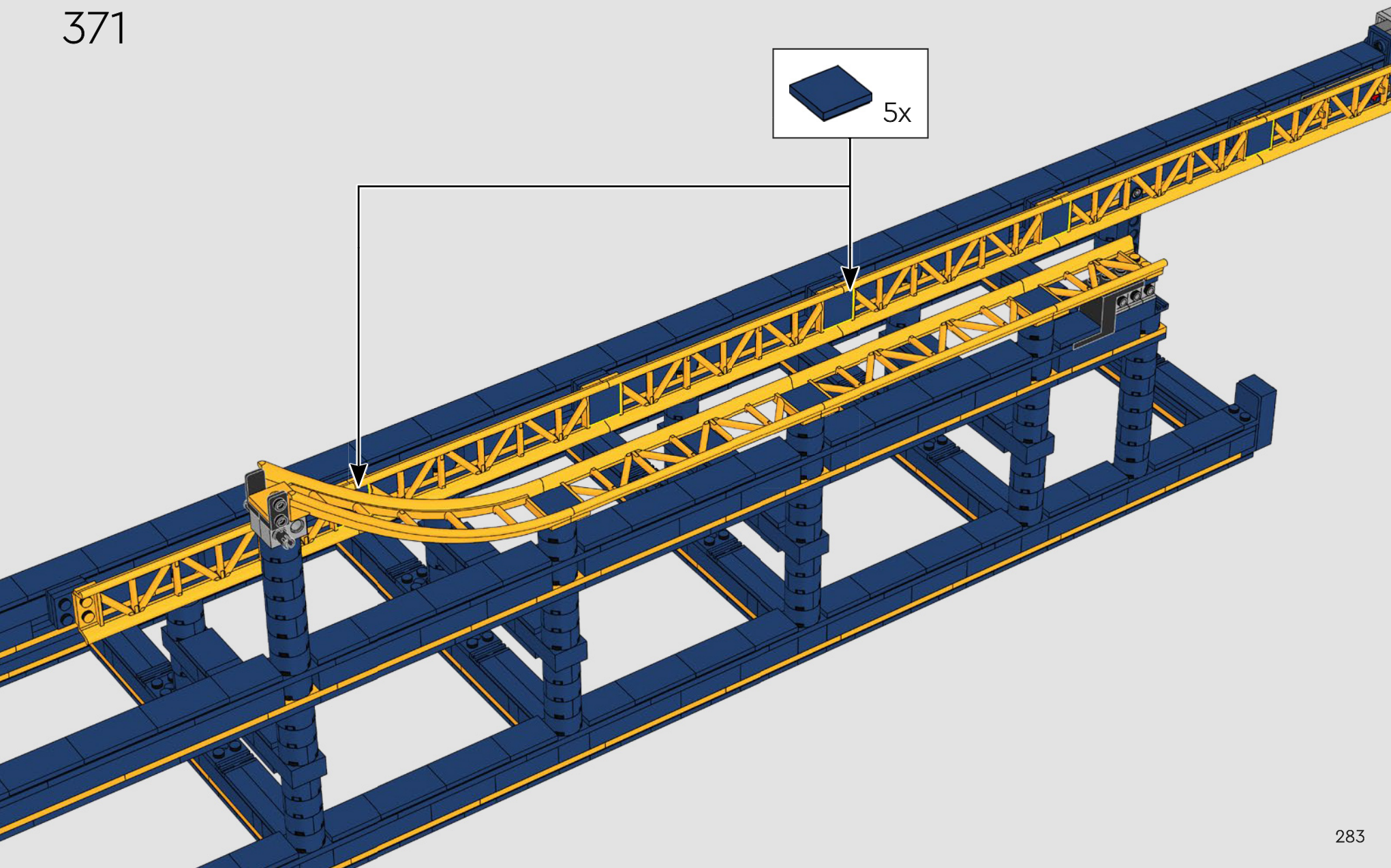

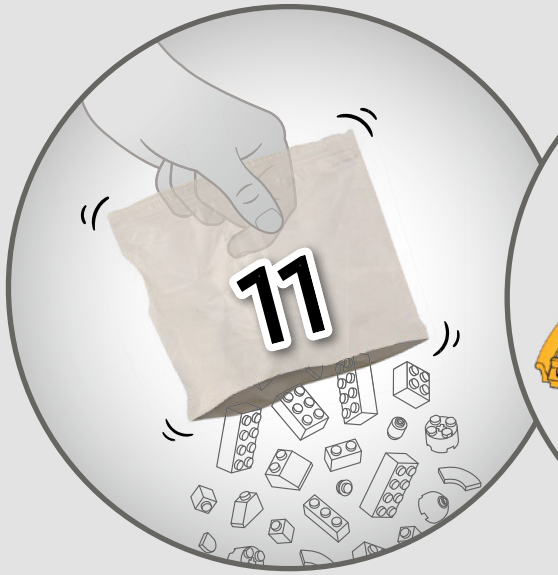

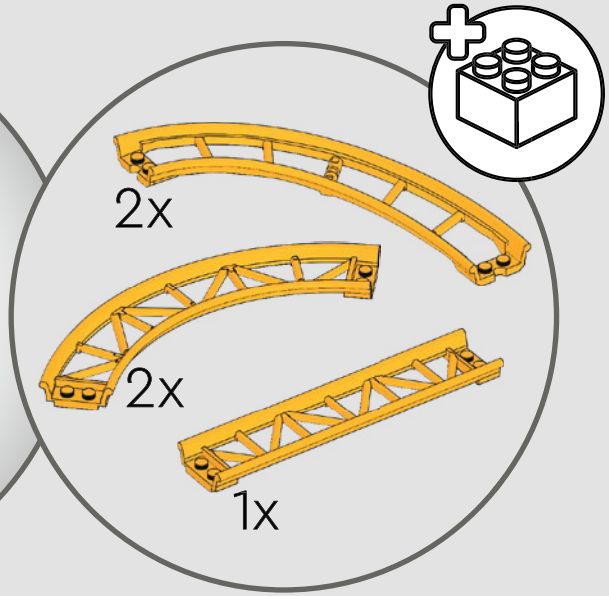

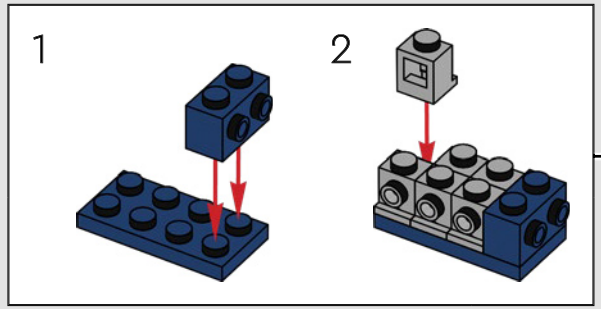

372

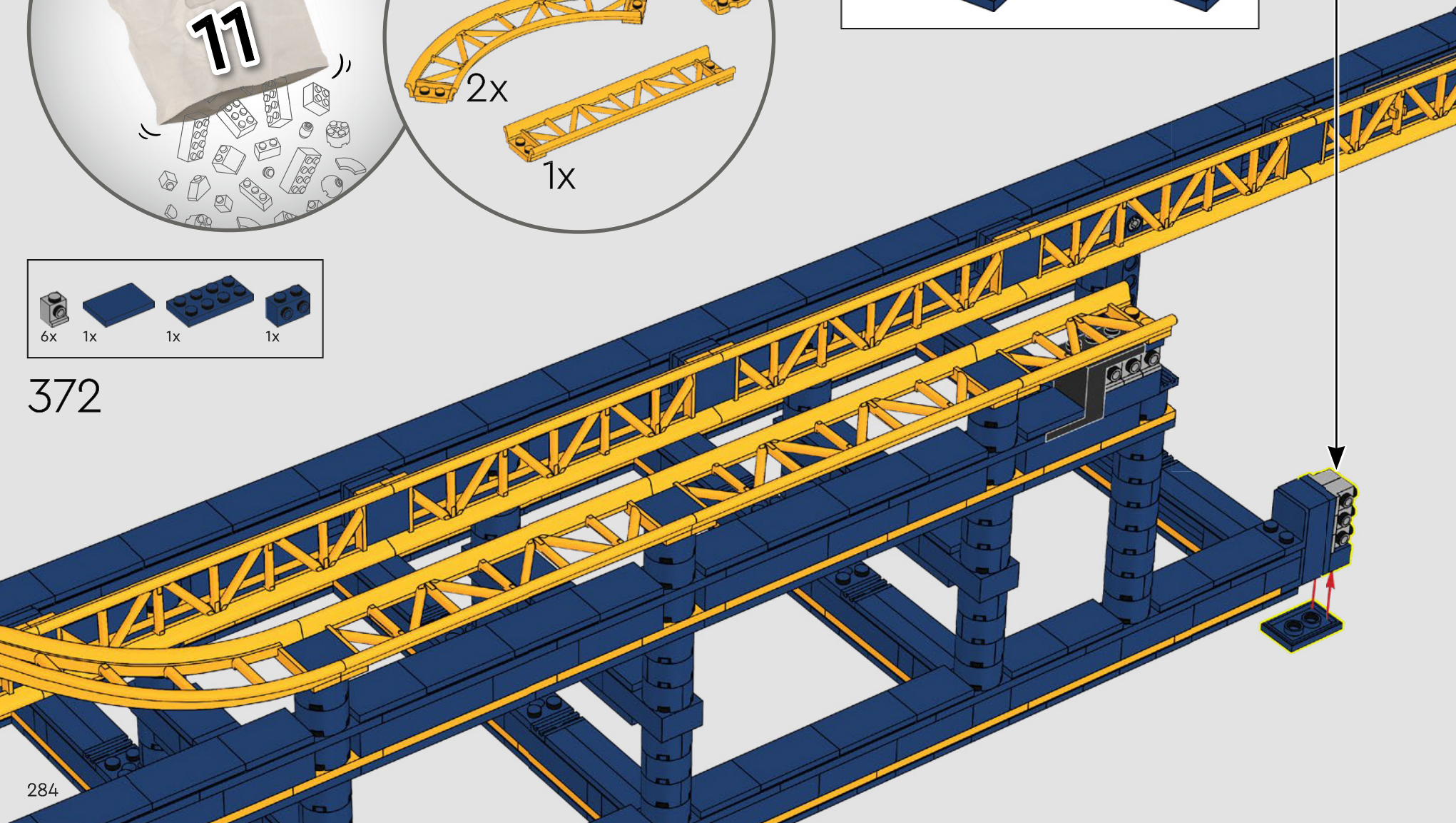

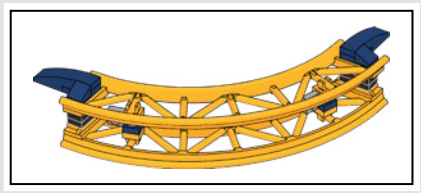

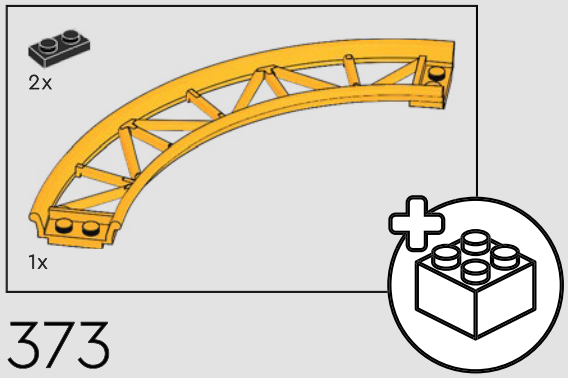

373

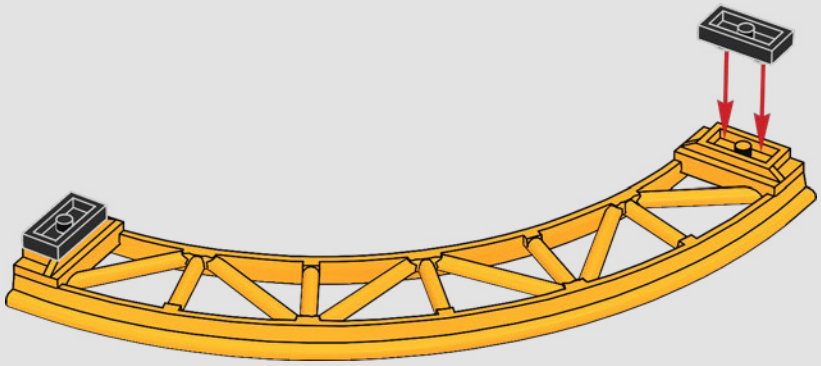

374

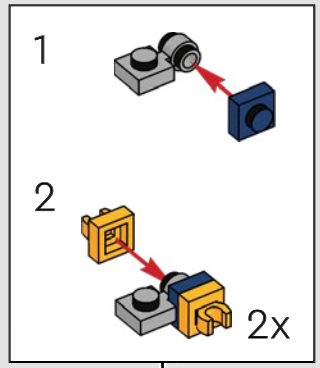

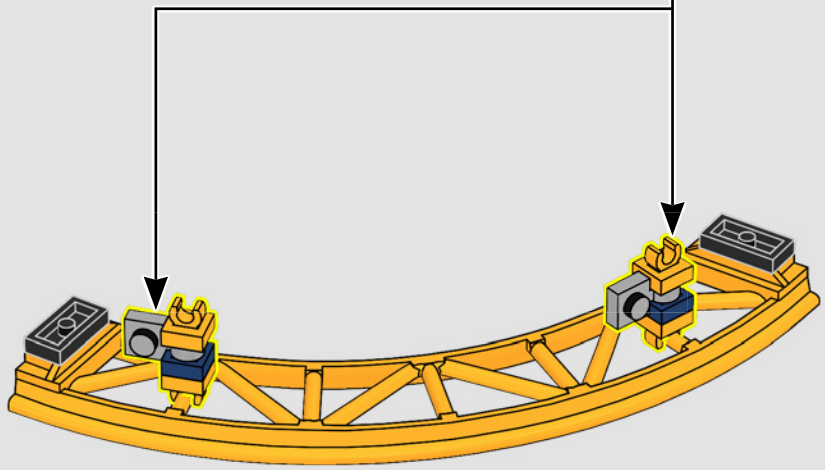

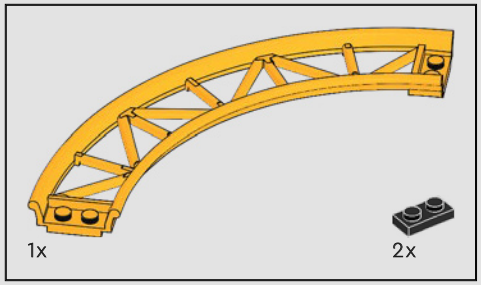

375

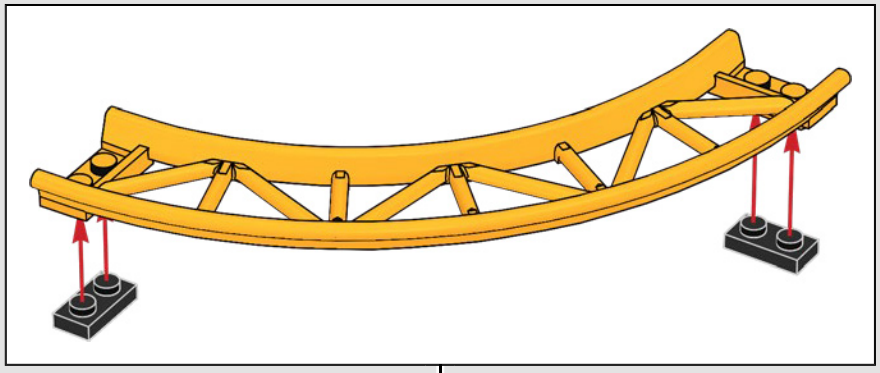

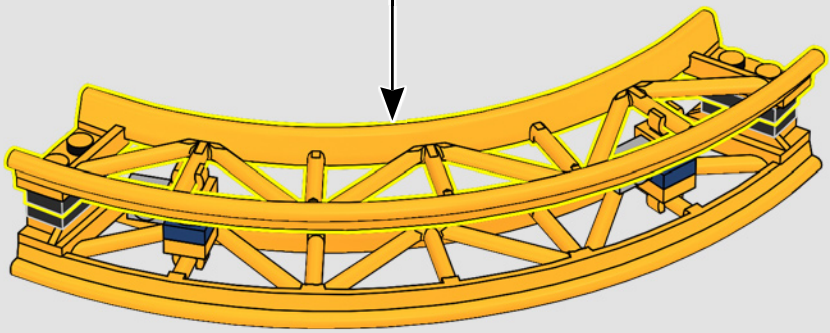

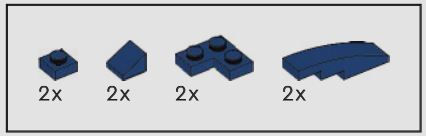

376

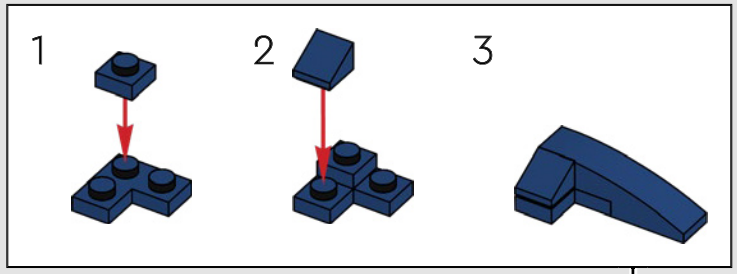

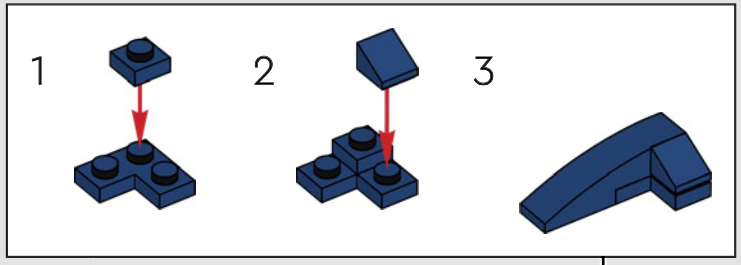

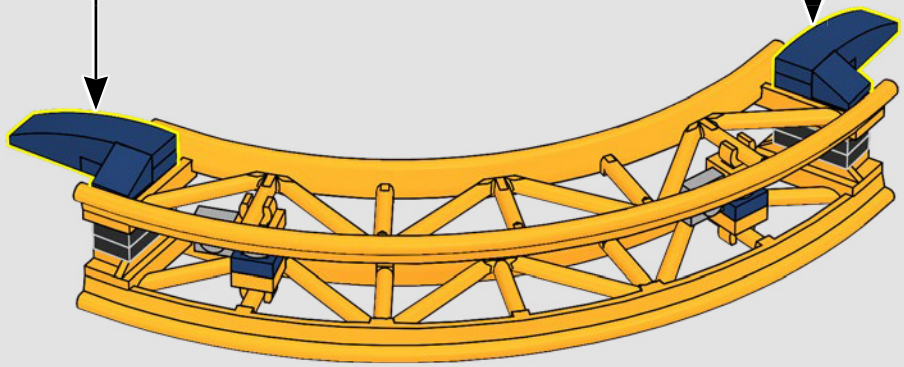

377

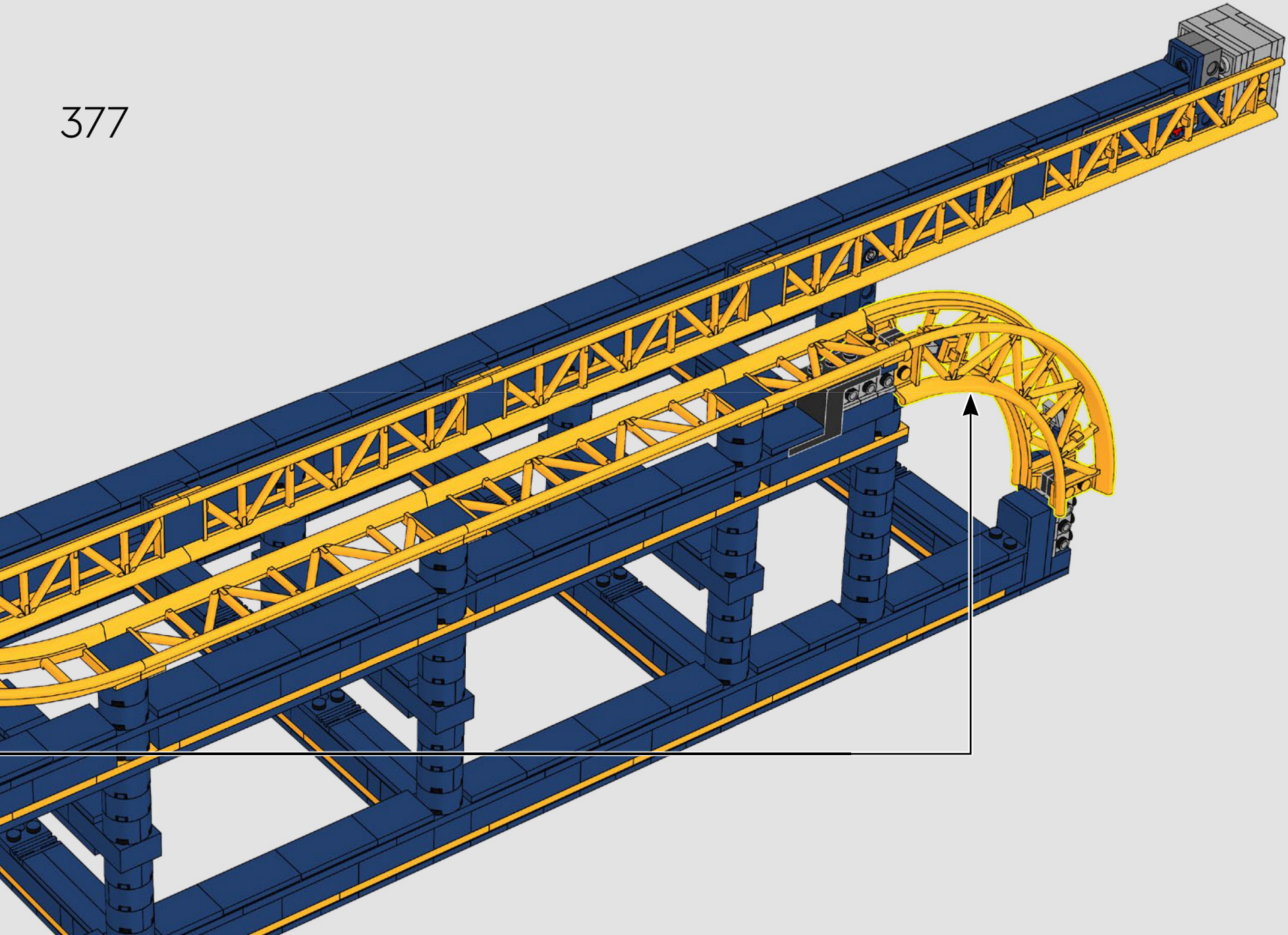

378

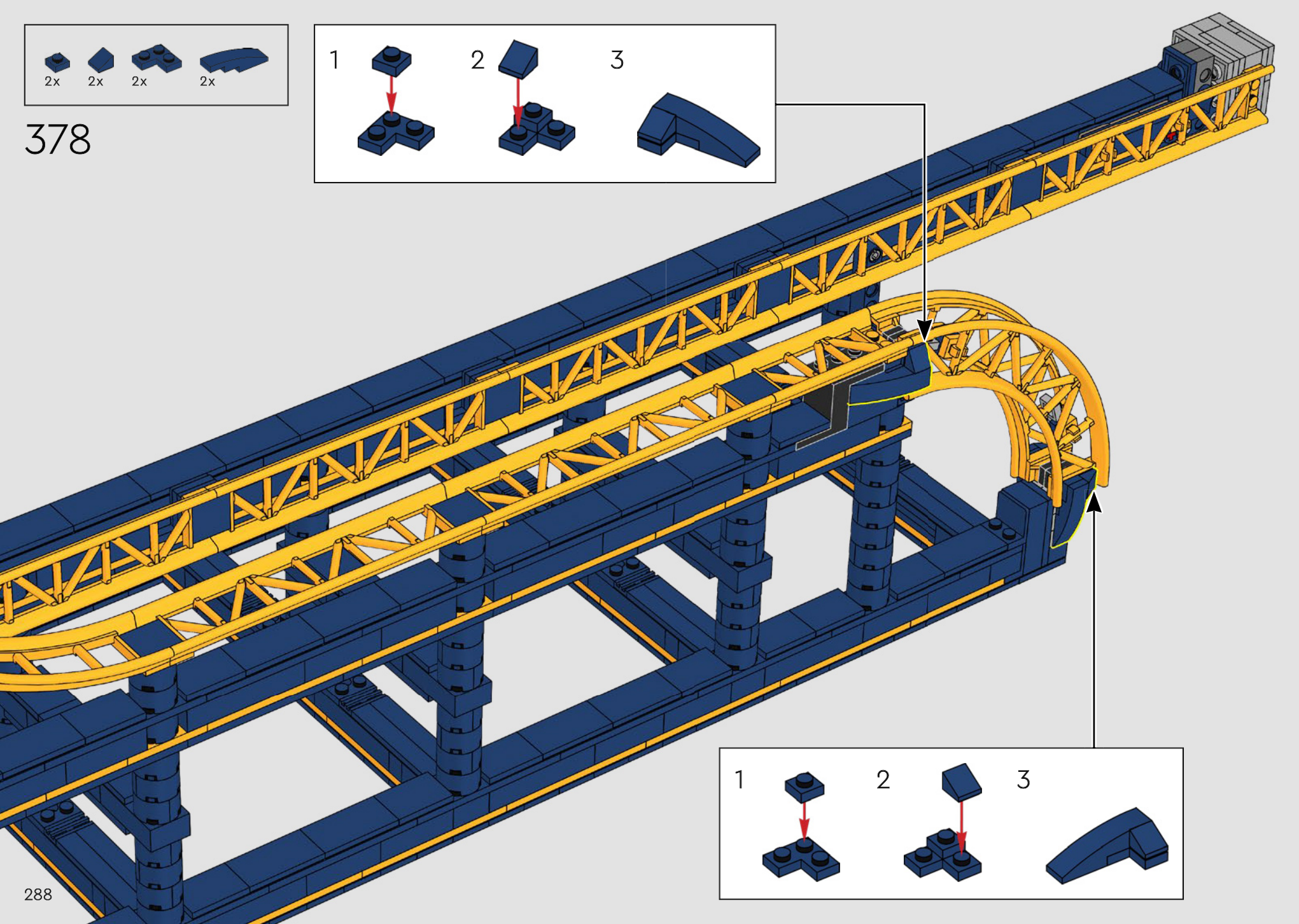

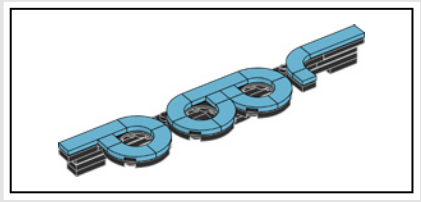

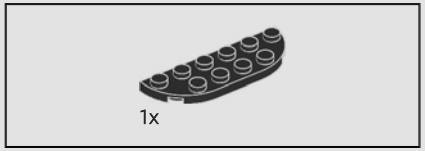

379

380

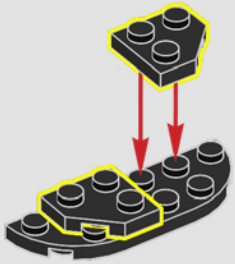

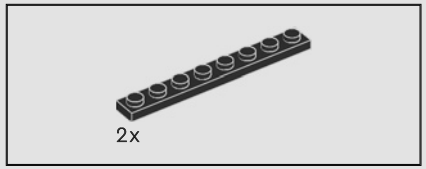

381

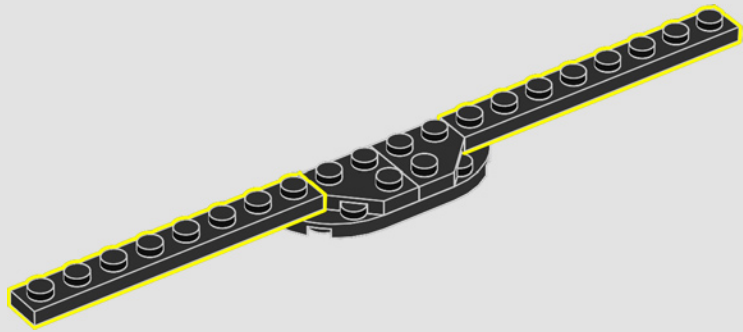

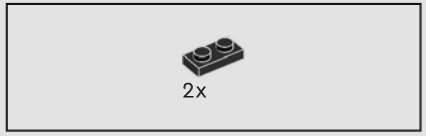

382

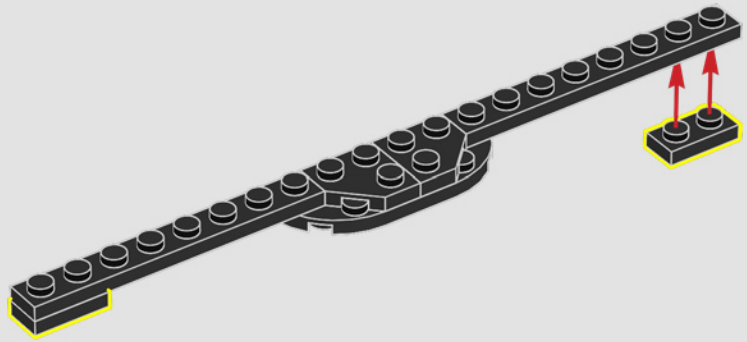

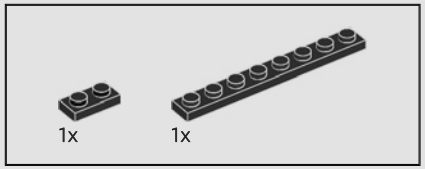

383

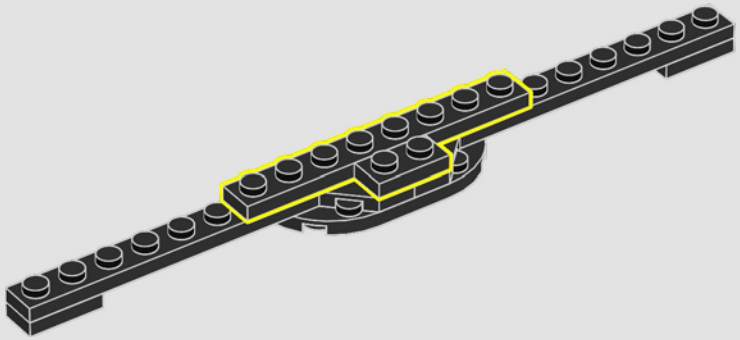

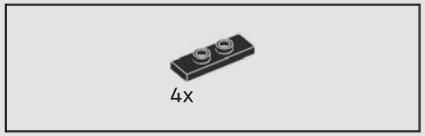

384

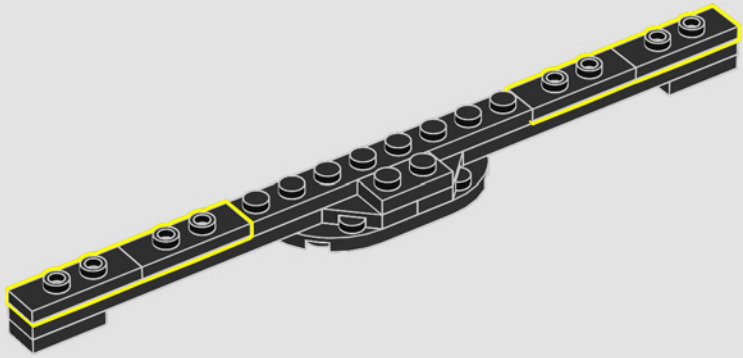

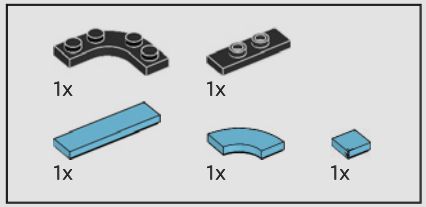

385

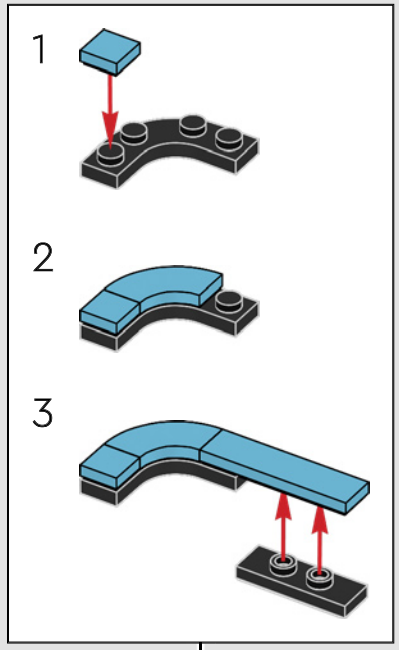

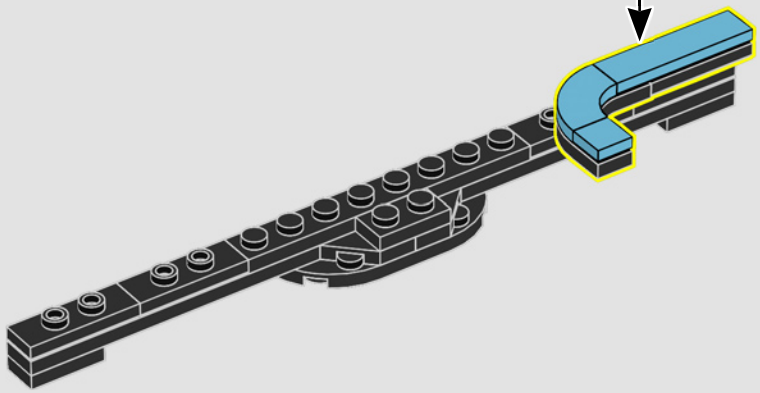

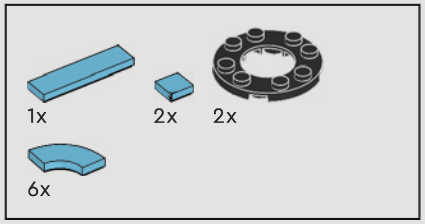

386

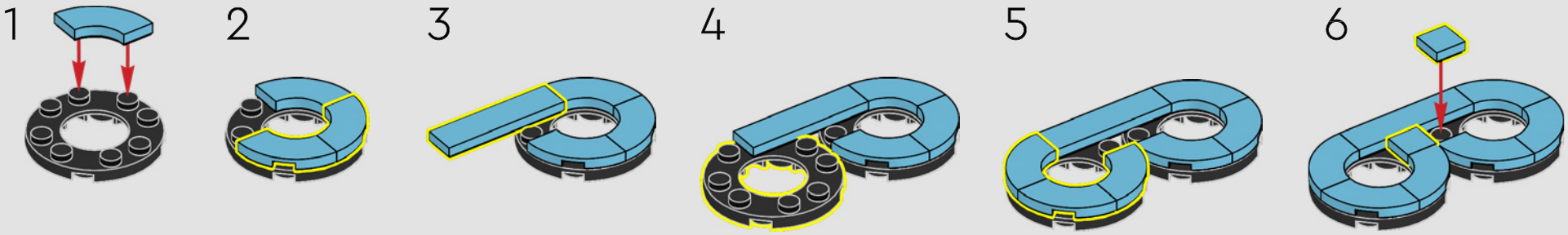

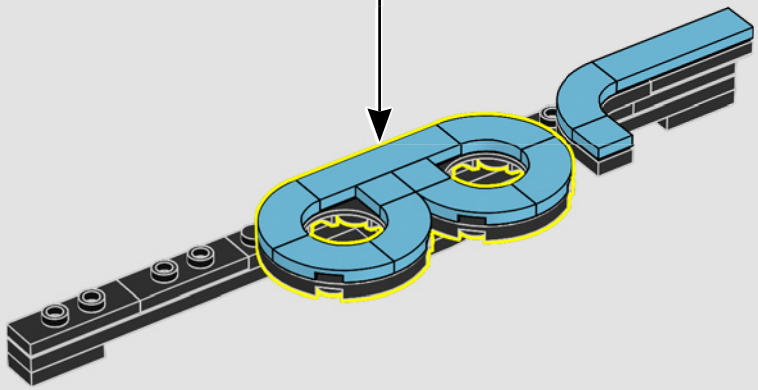

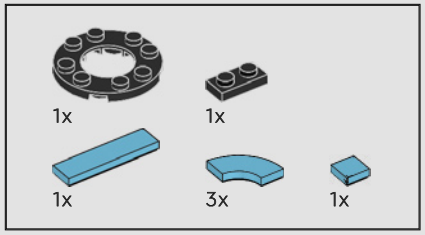

387

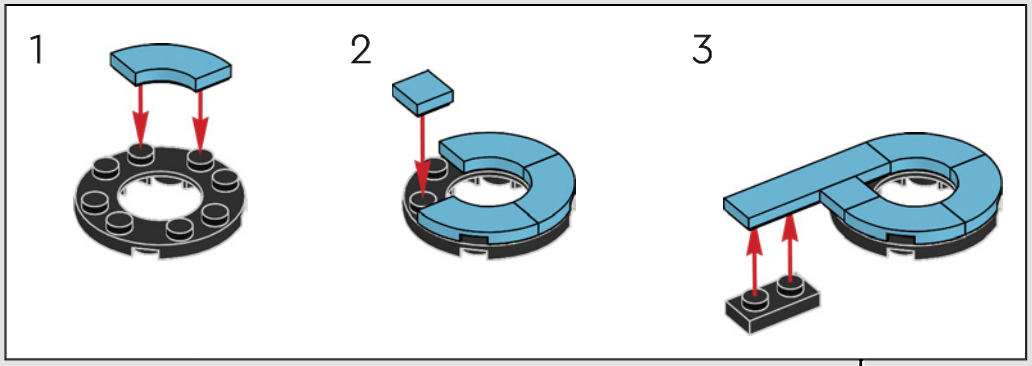

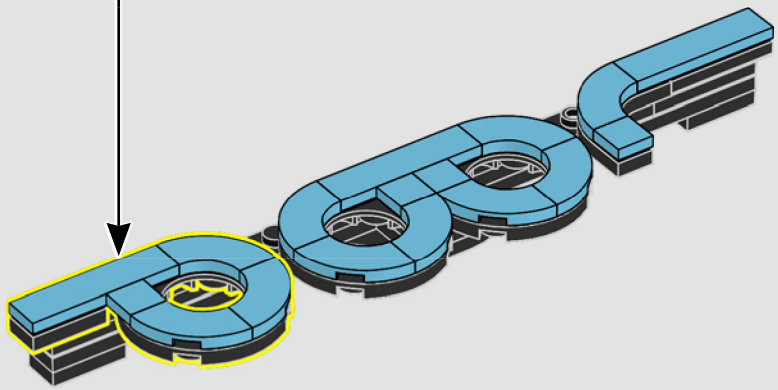

388

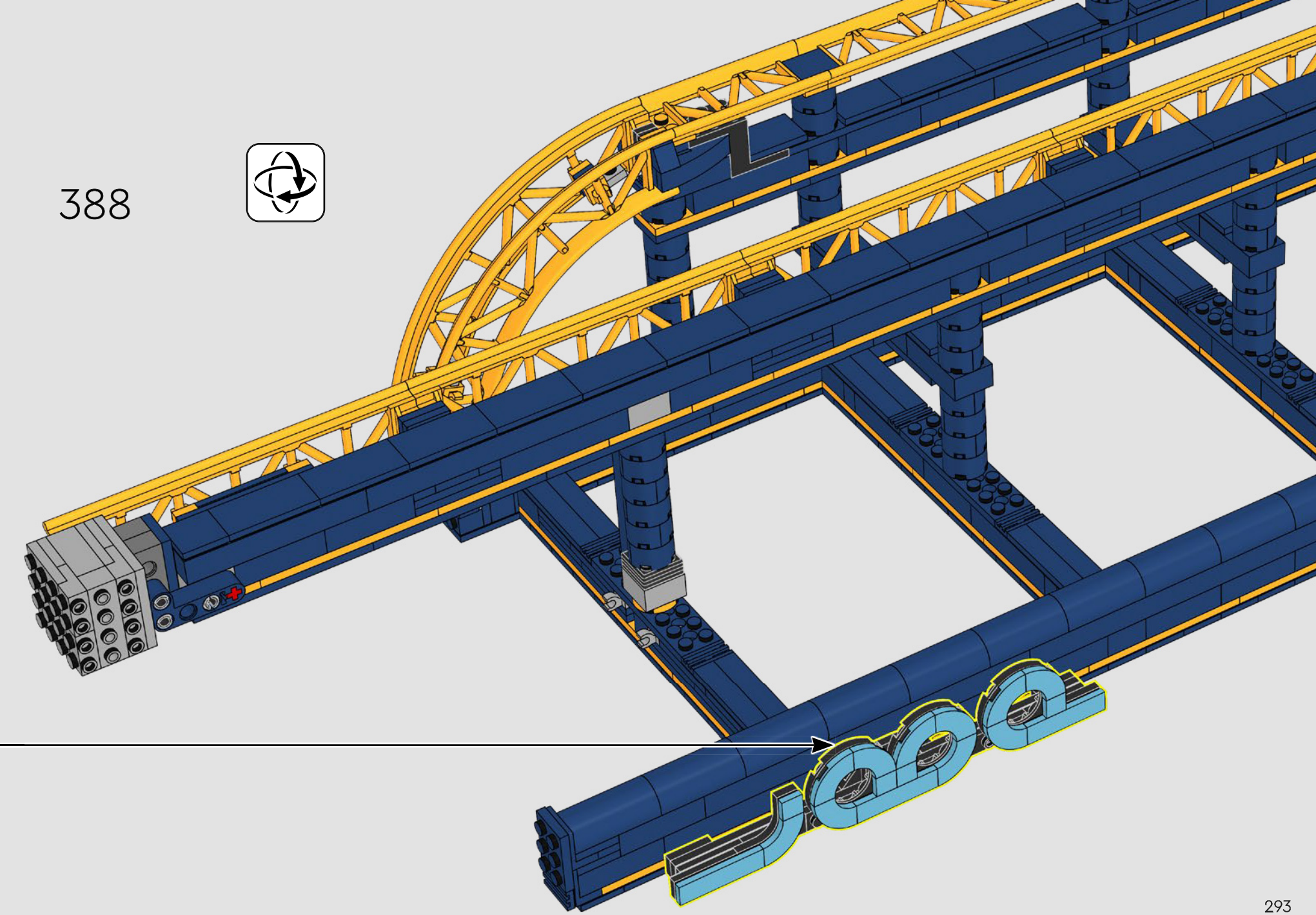

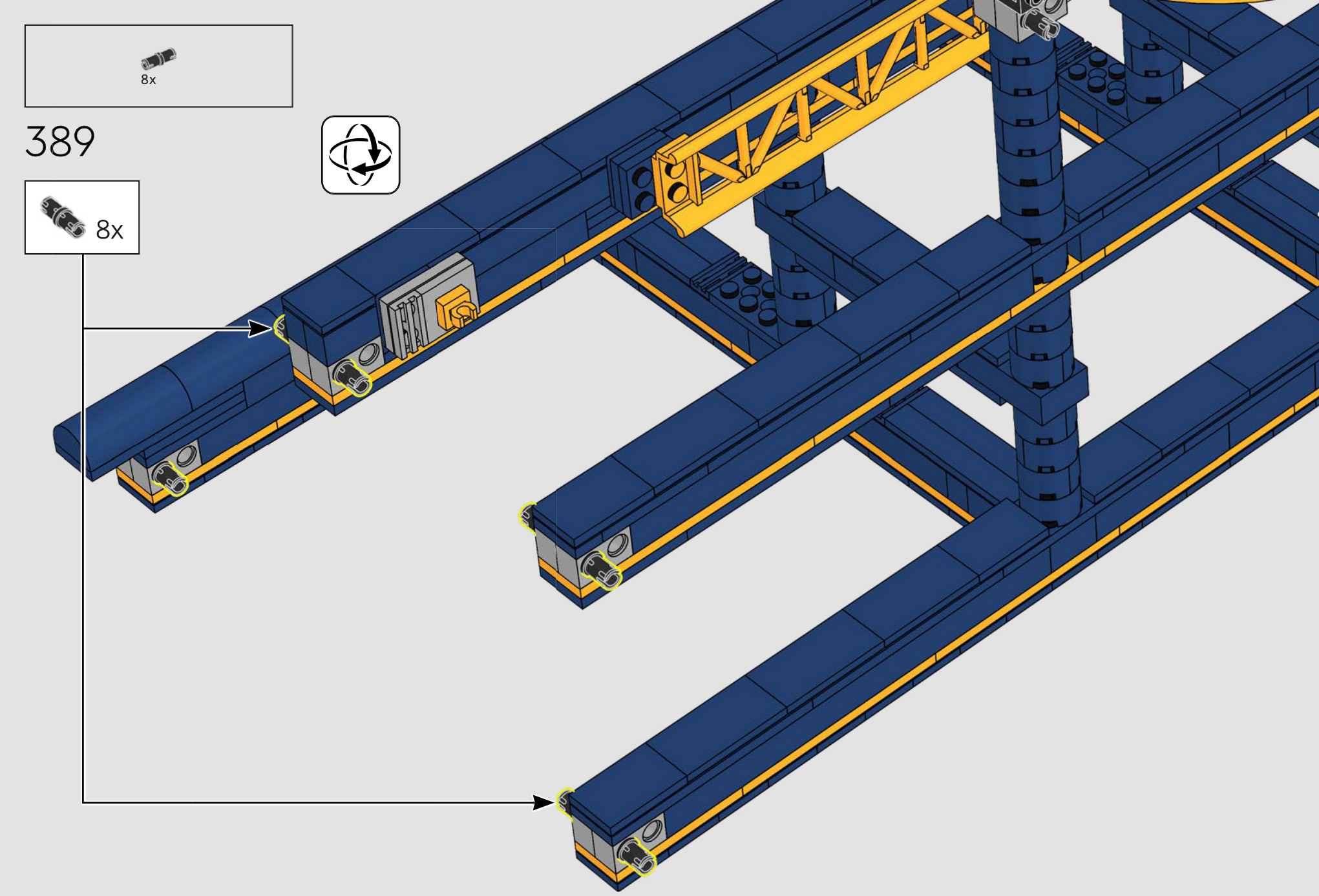
8x
389
8x

390

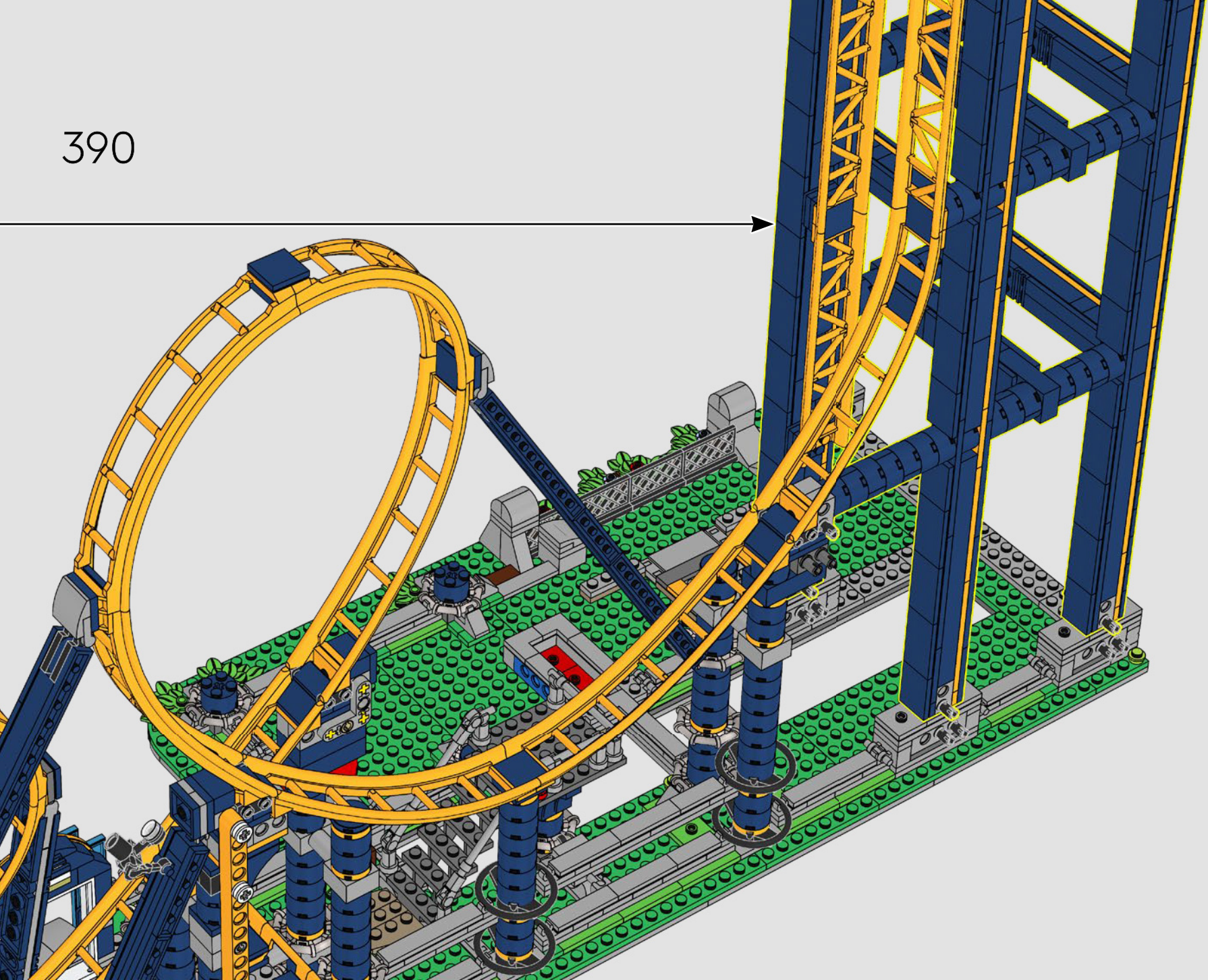

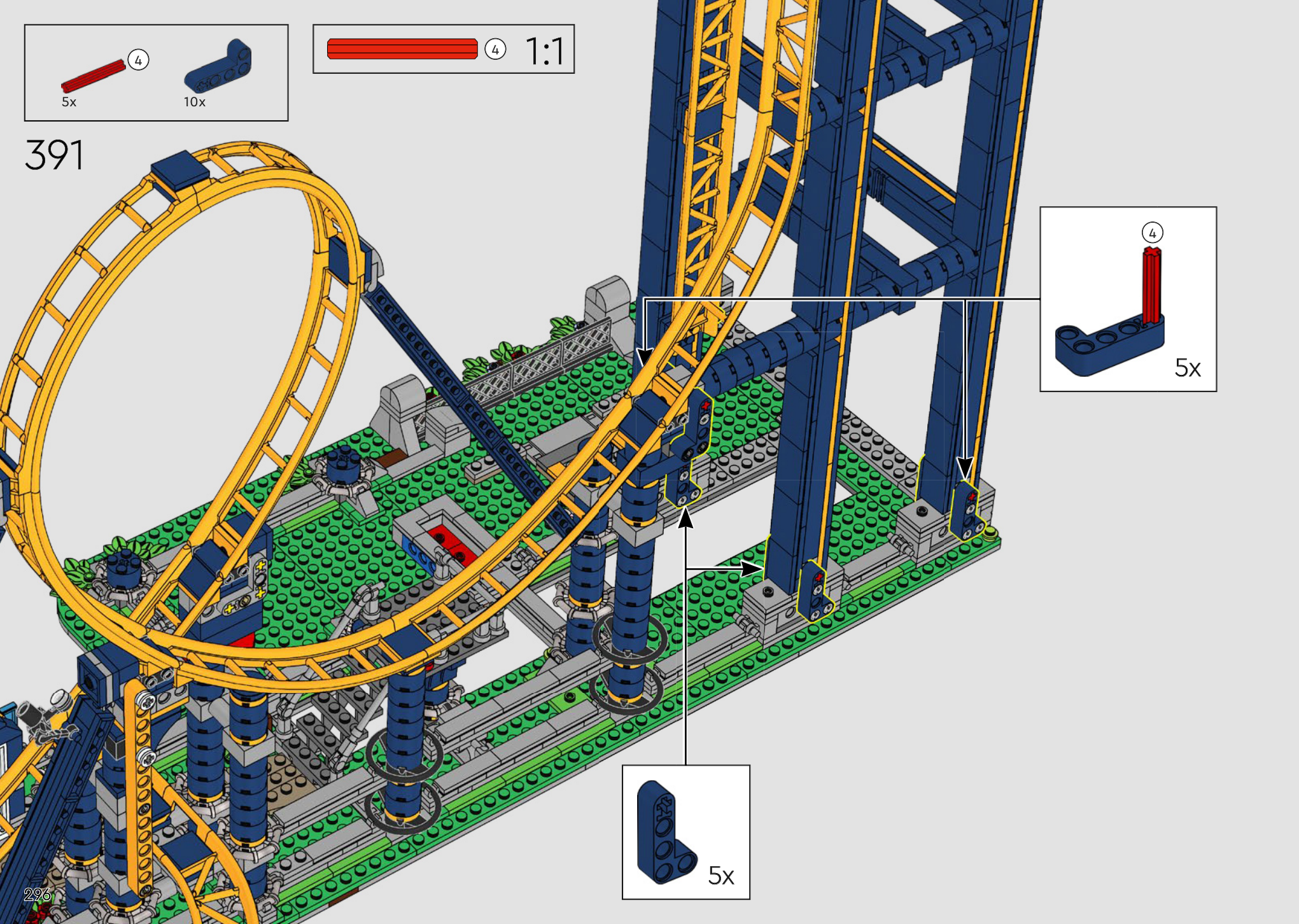
4
5x
10x
4
1:1
391
4
5x
5x

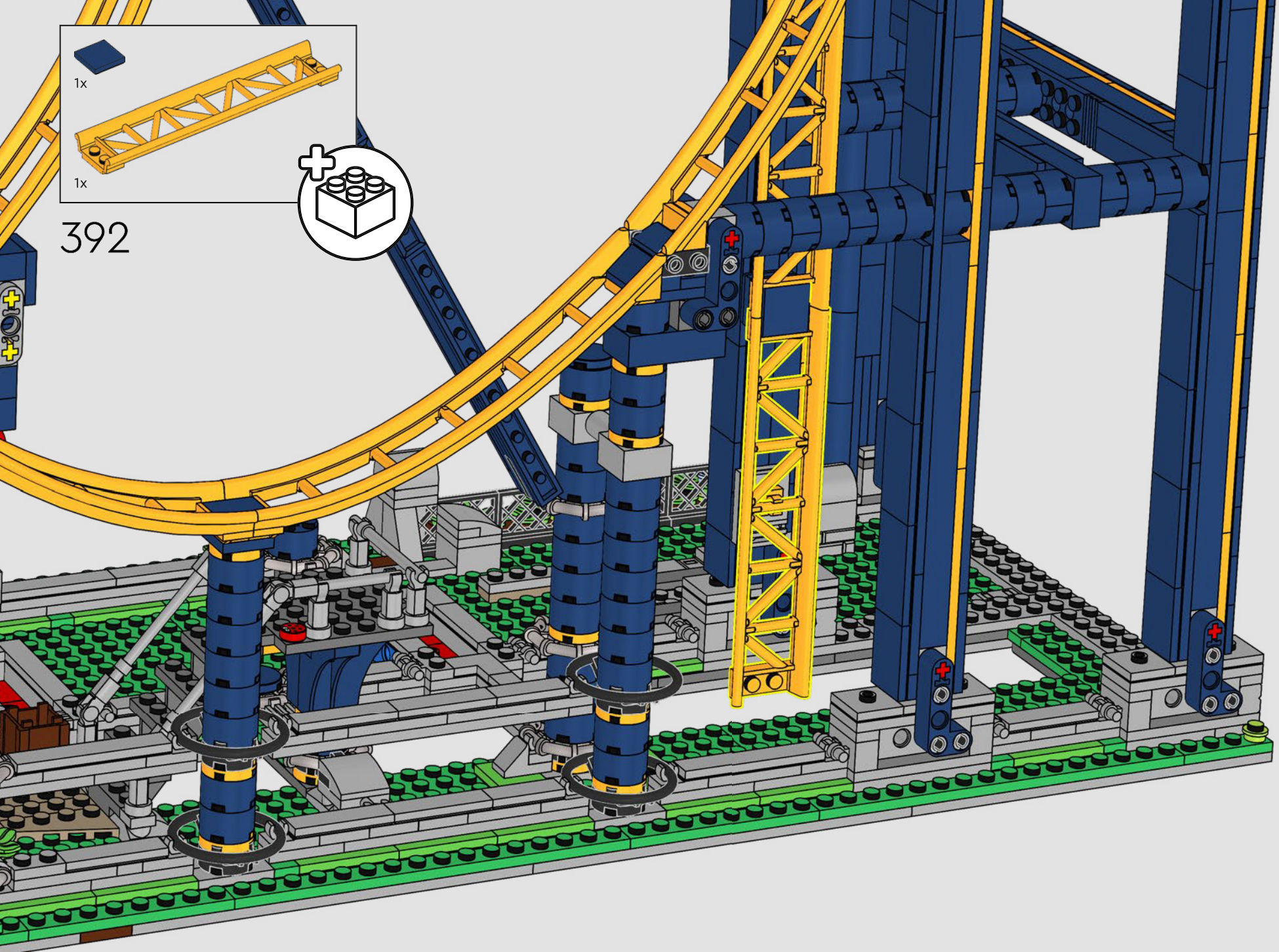
1x
1x
392

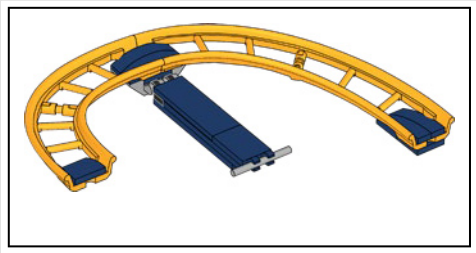

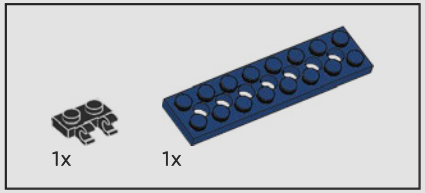

393

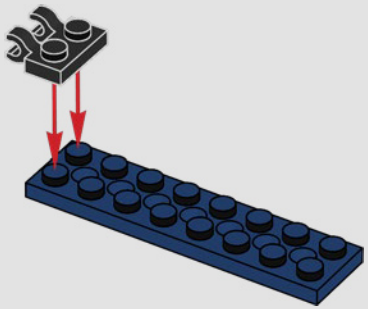

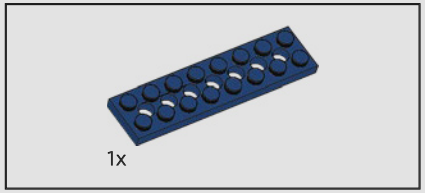

394

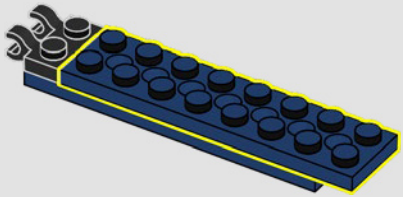

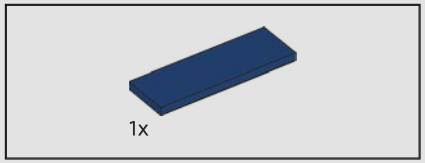

395

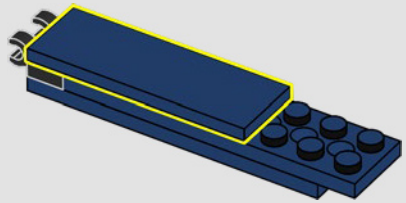

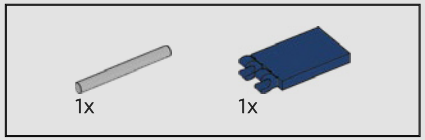

396

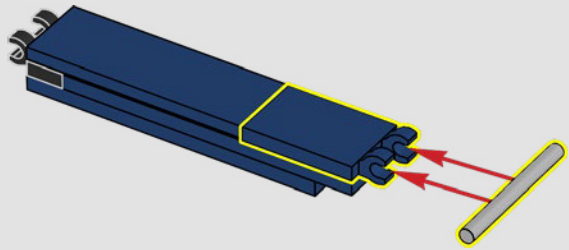

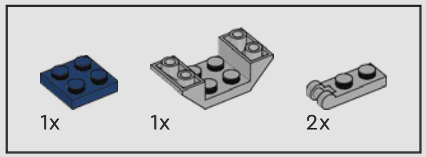

397

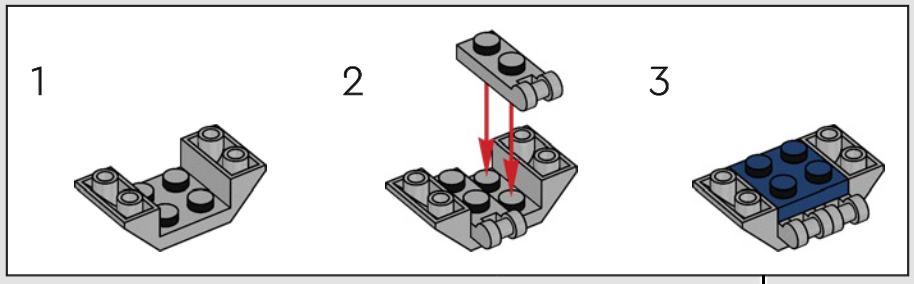

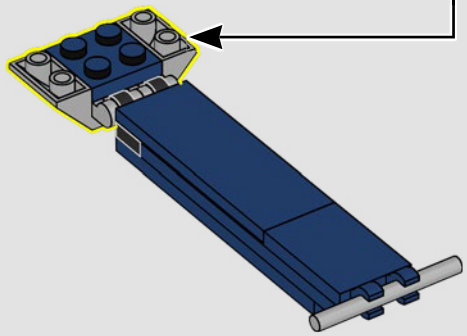

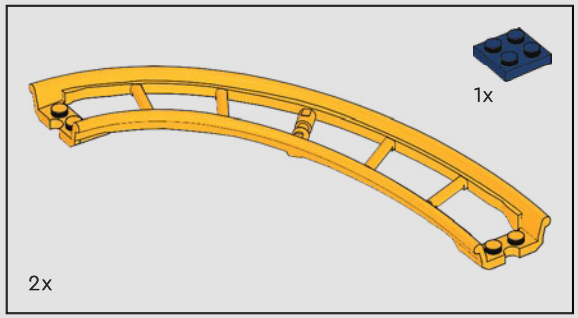

398

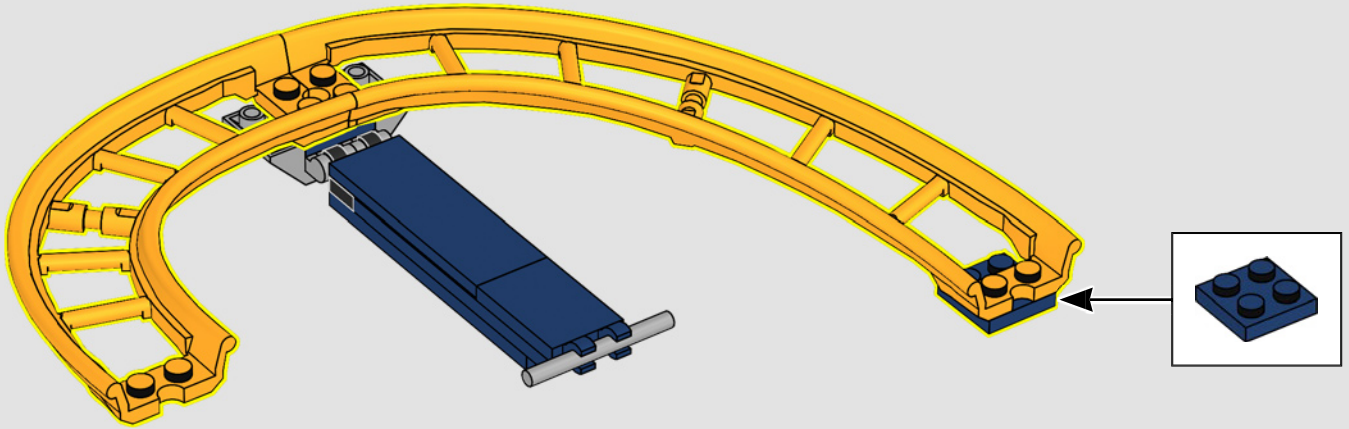

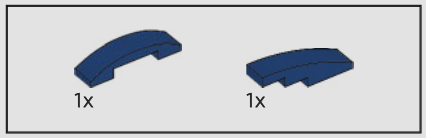

399

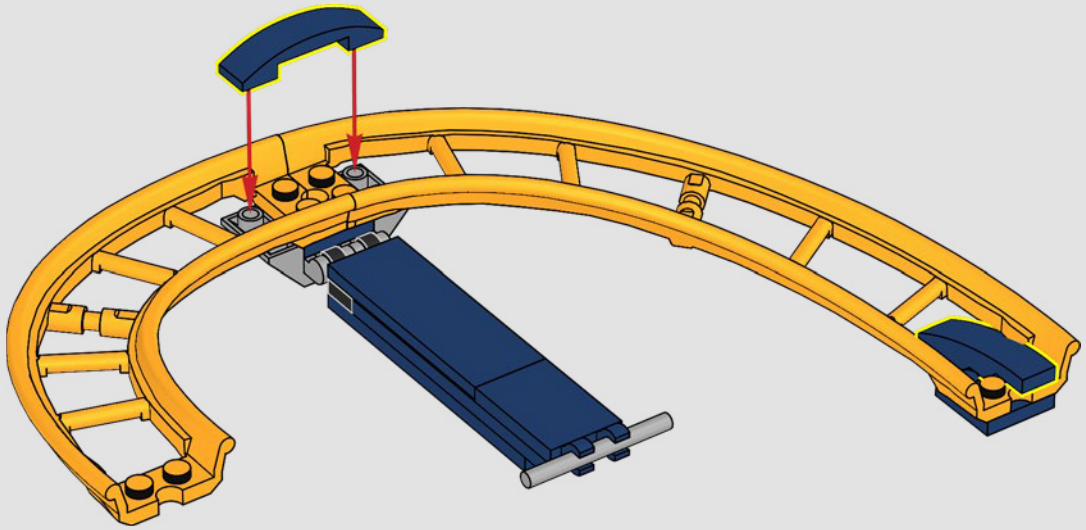

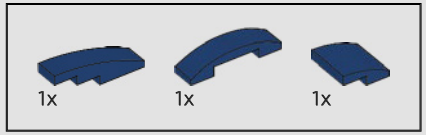

400

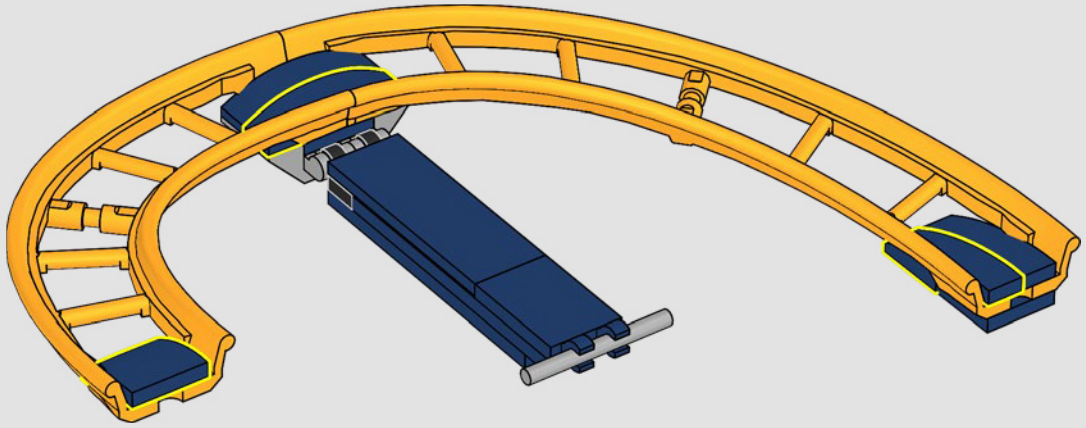

401

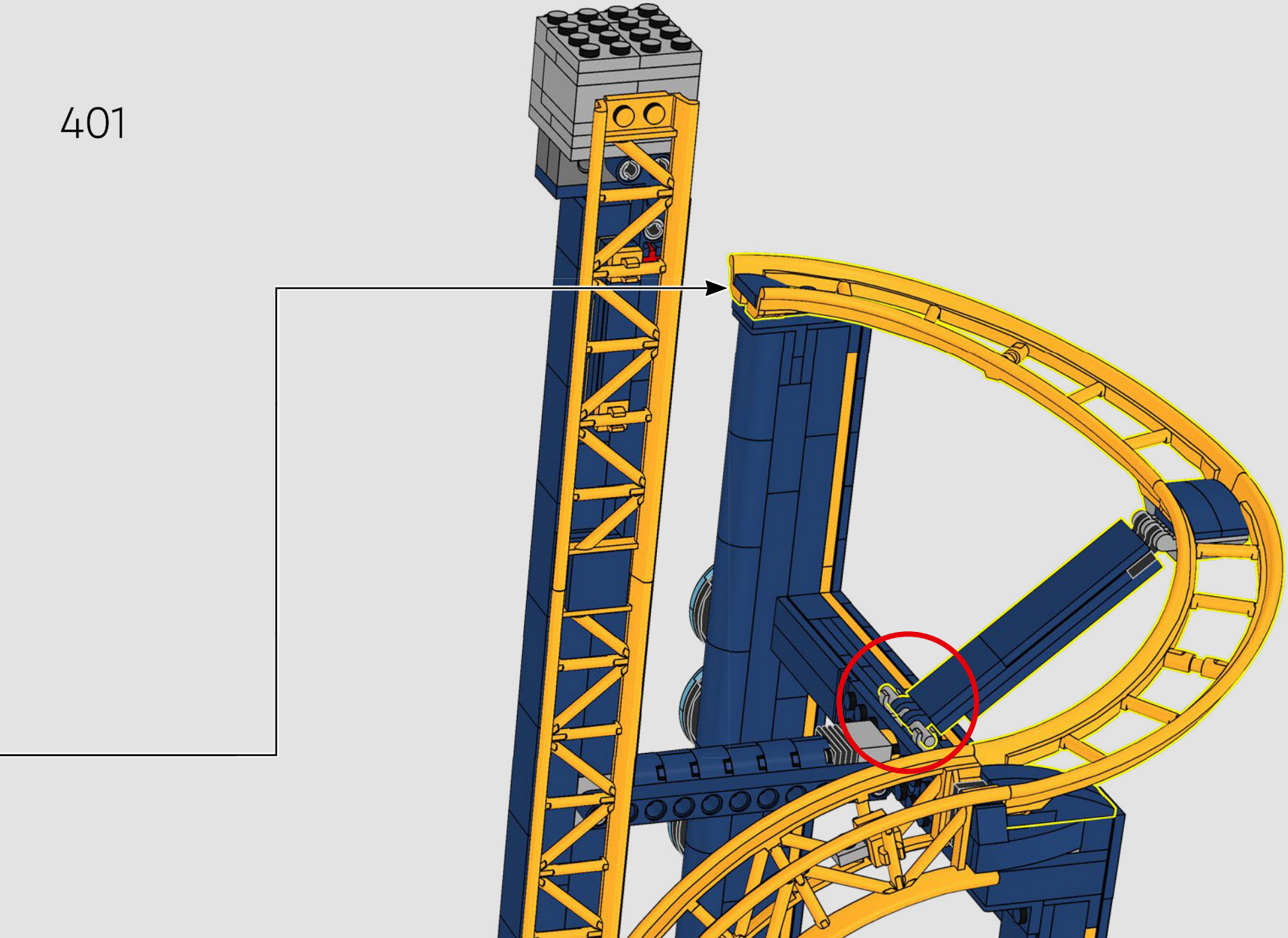

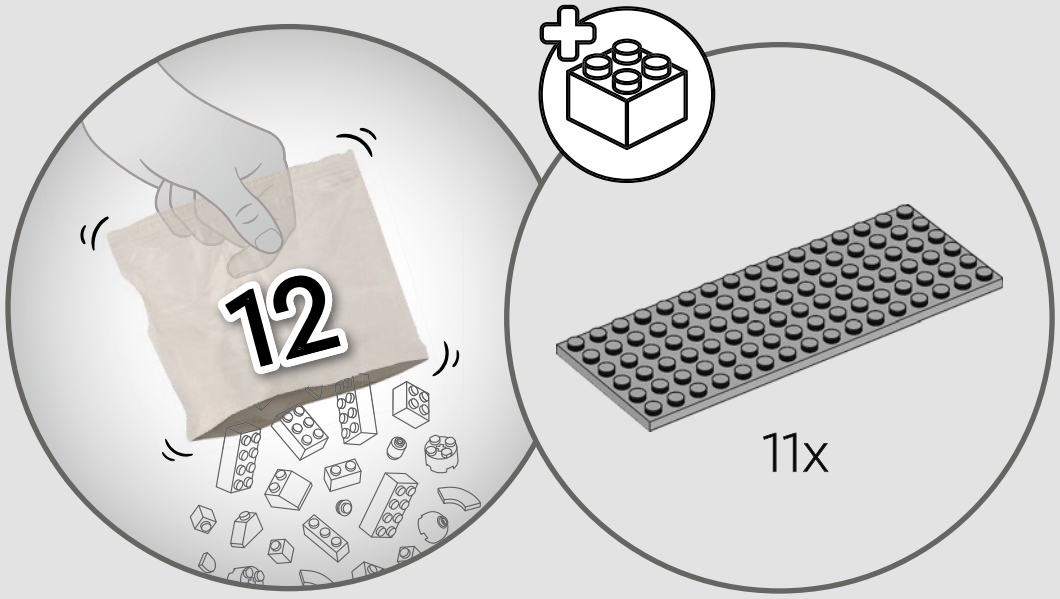
12
11x

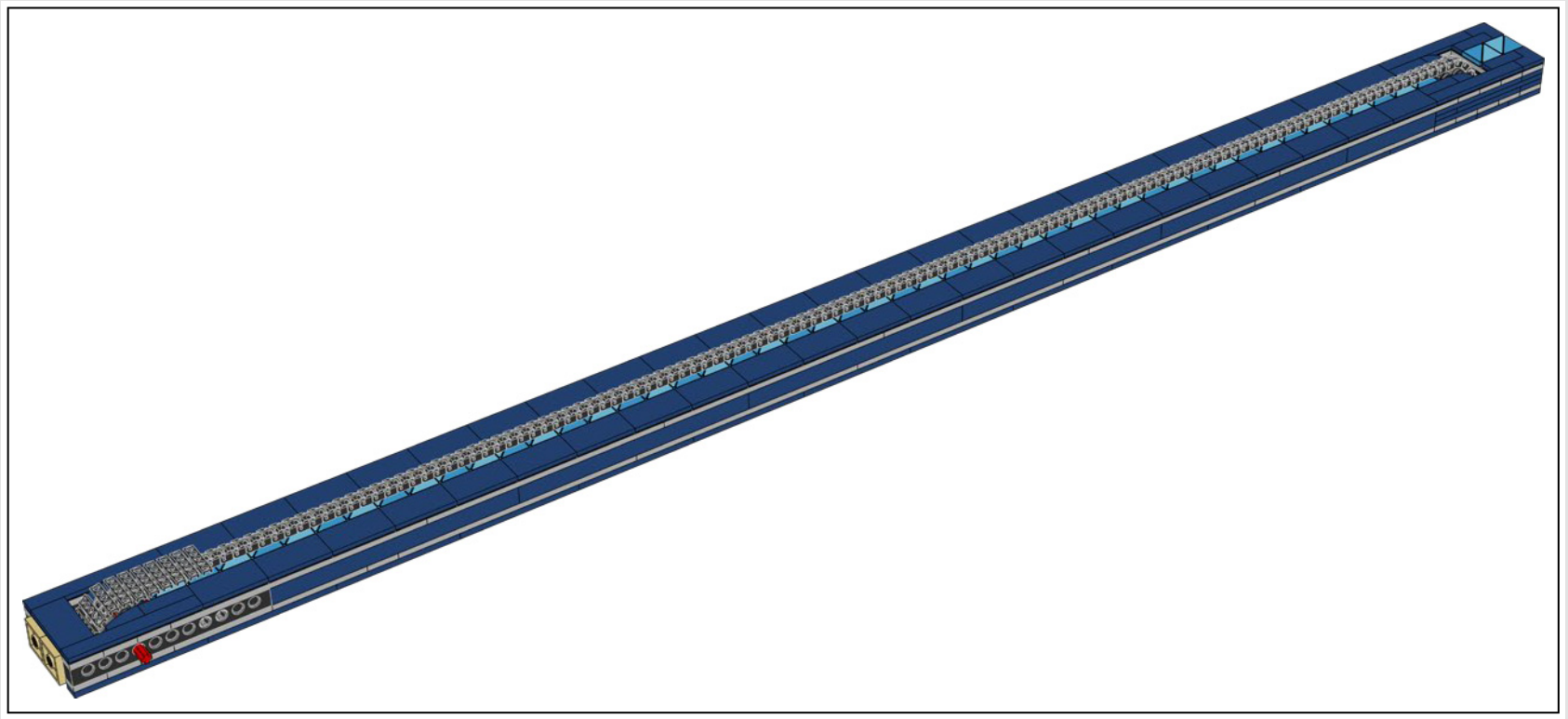

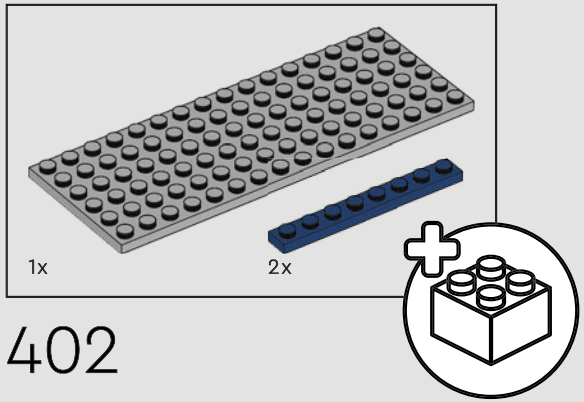

402

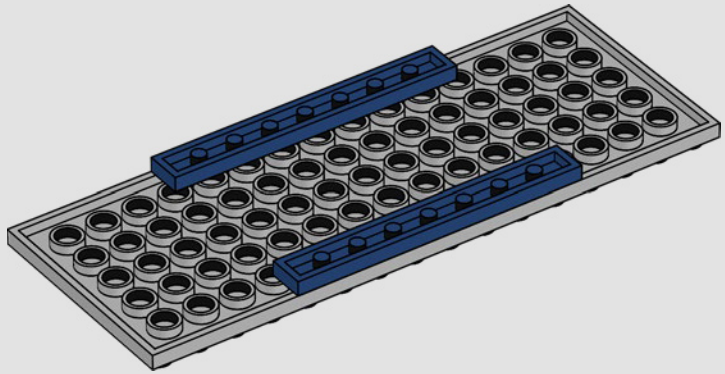

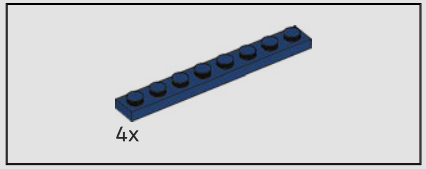

403

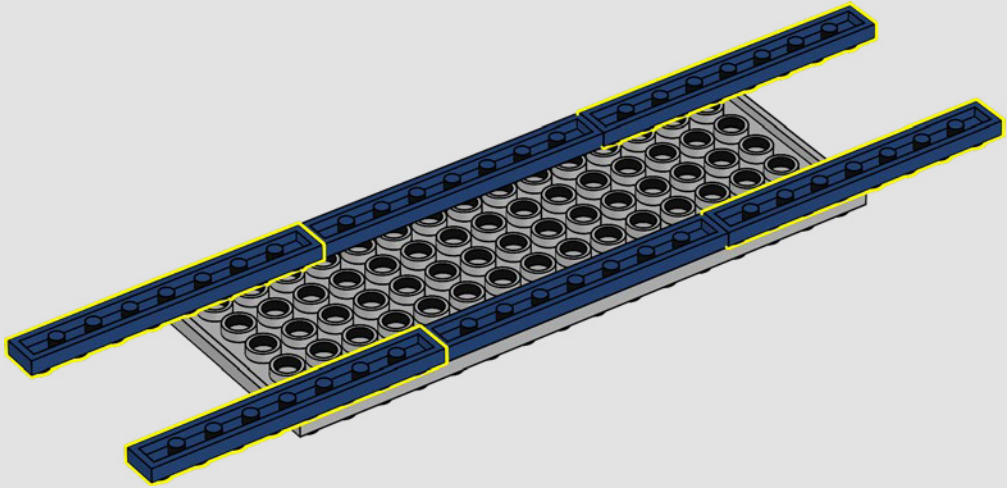

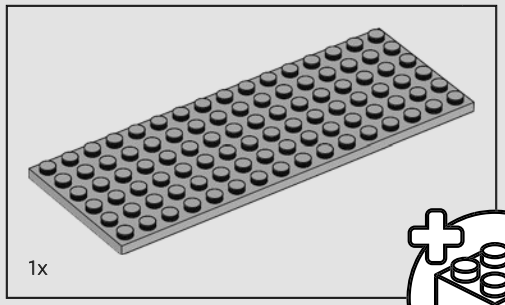

404

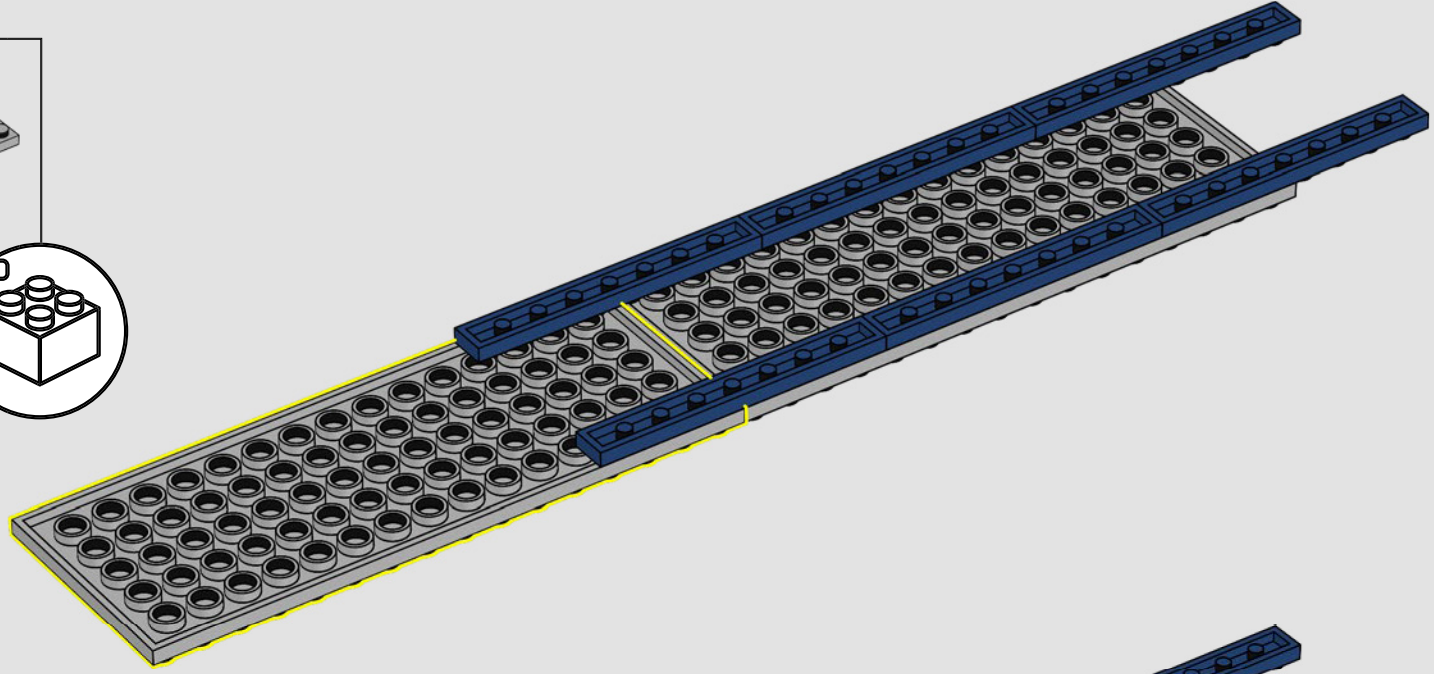

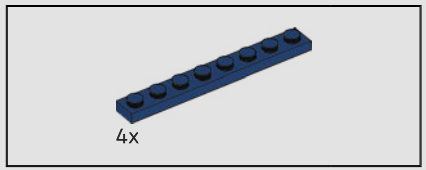

405

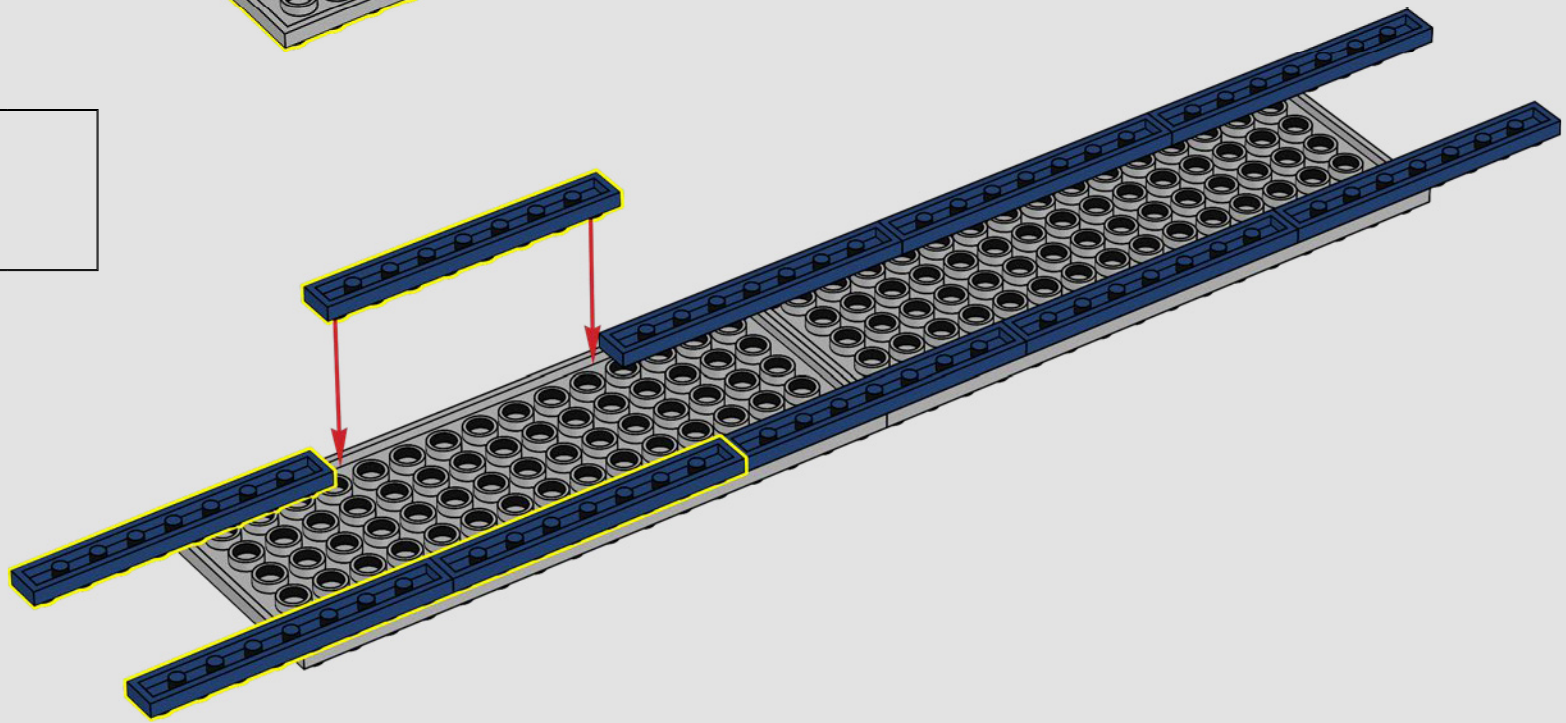

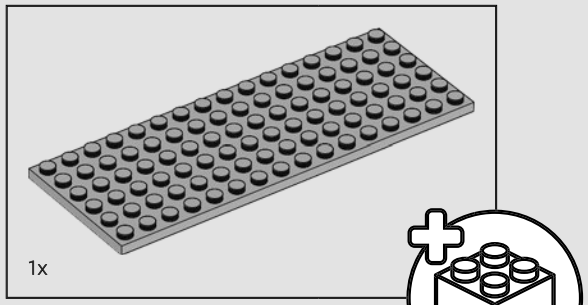

406

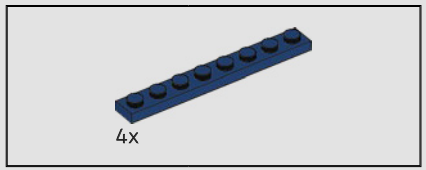

407

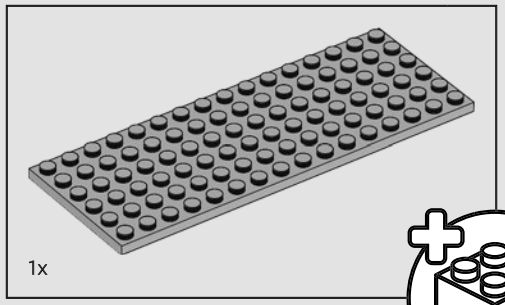

408

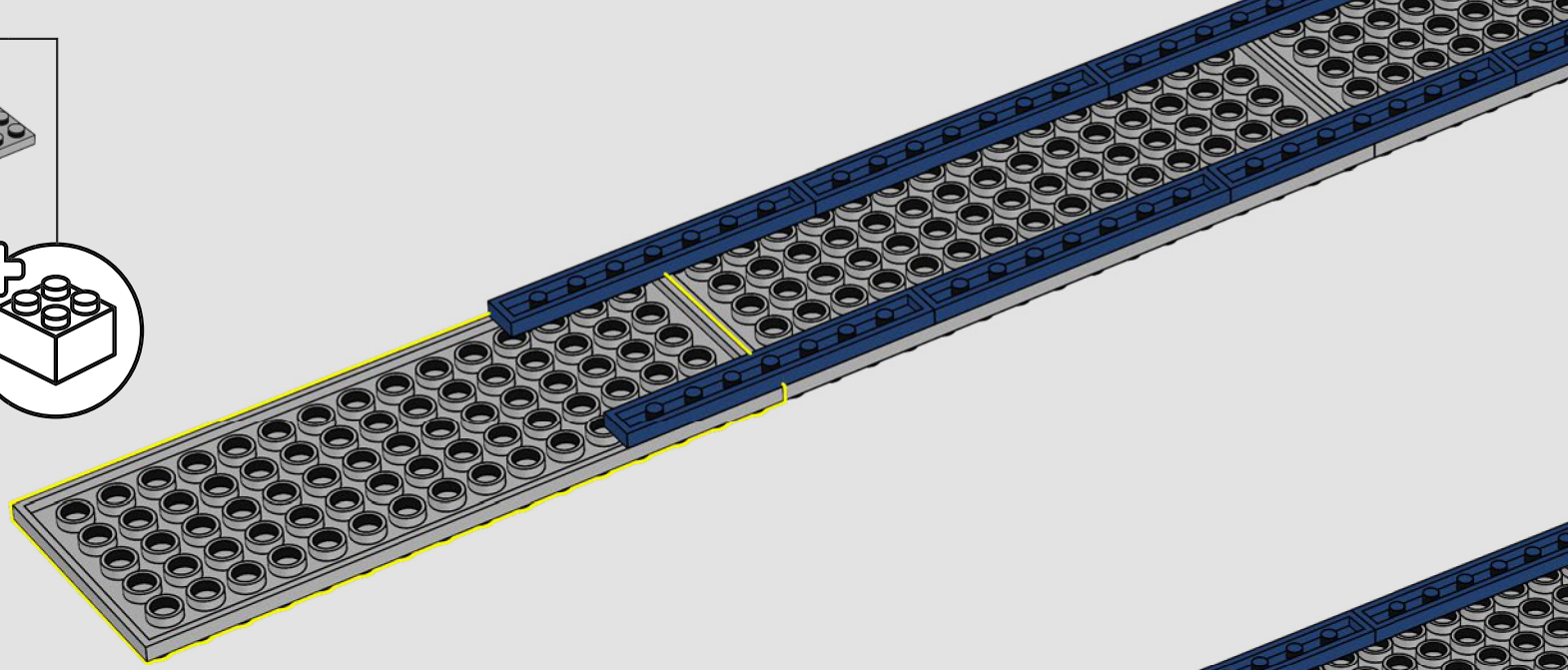

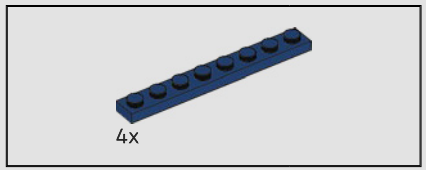

409

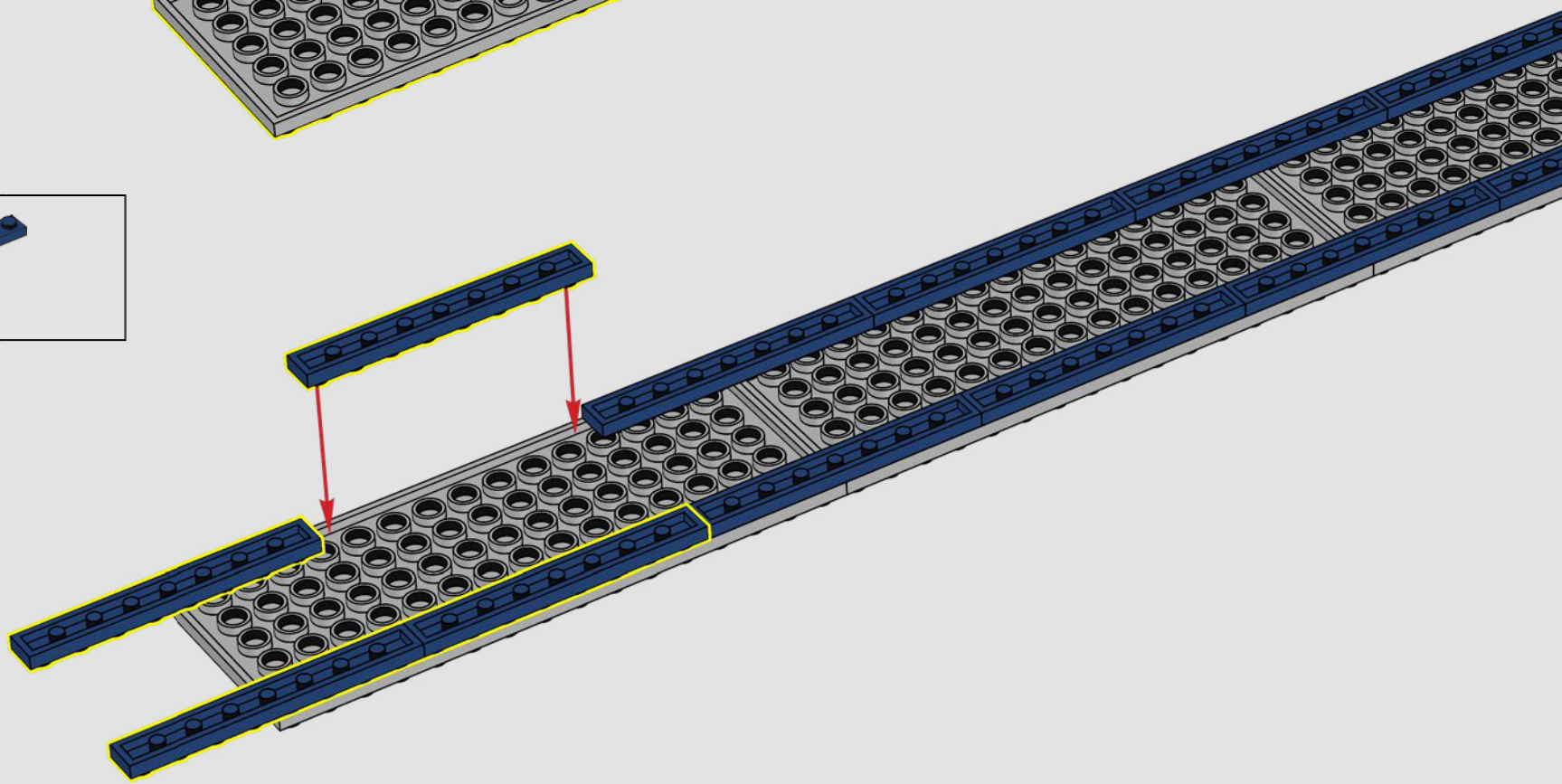

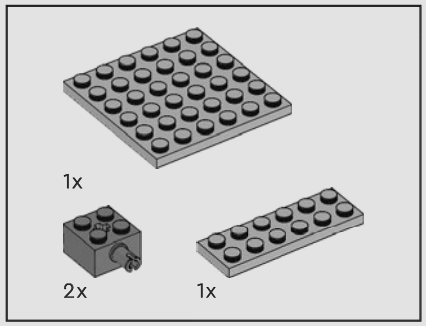

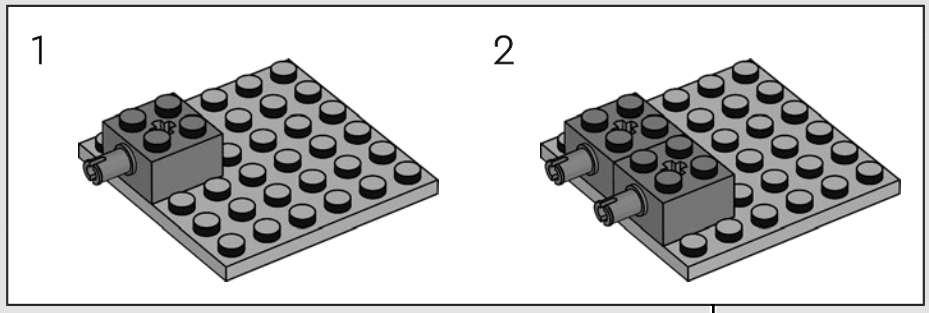

410

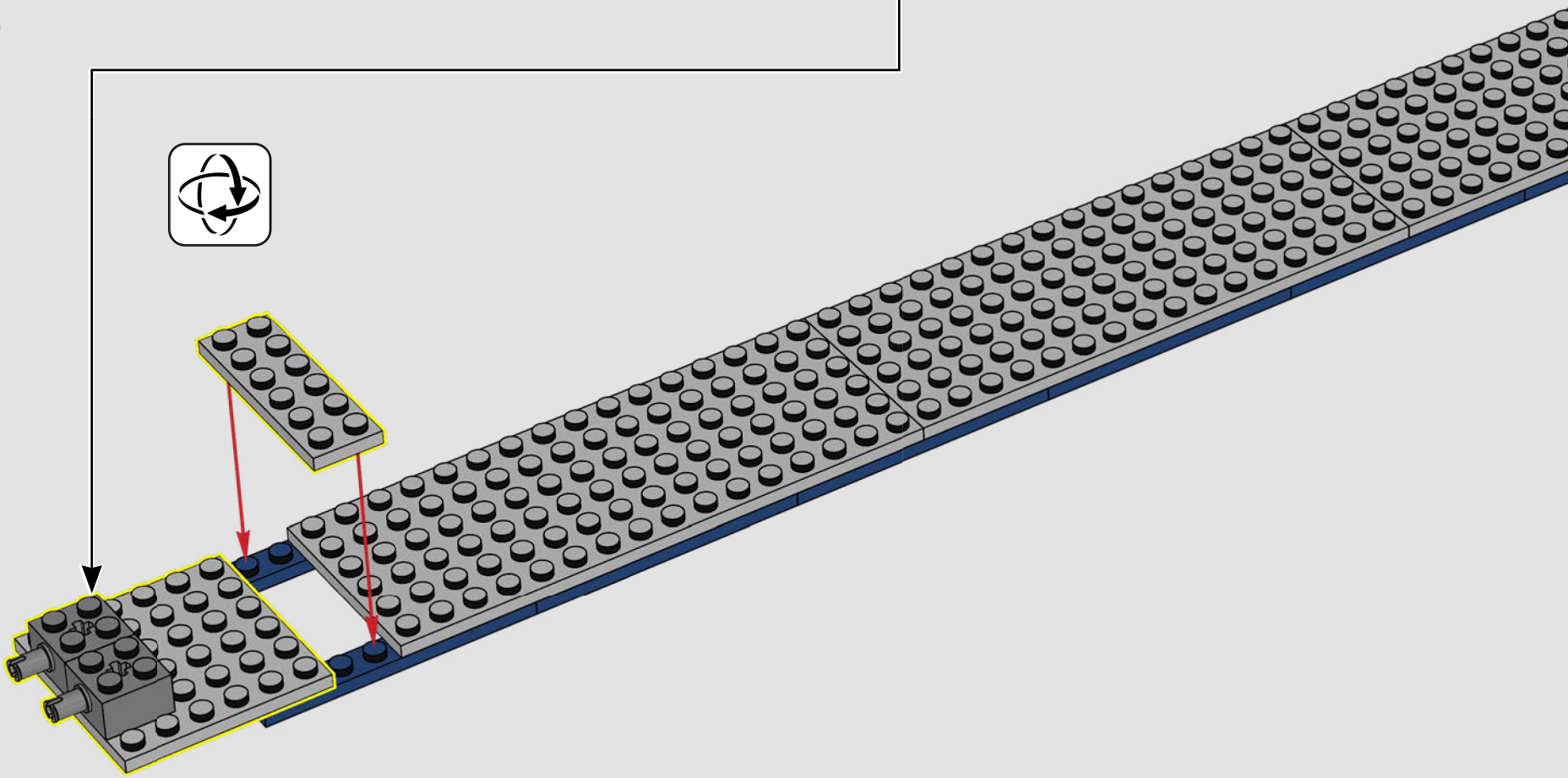

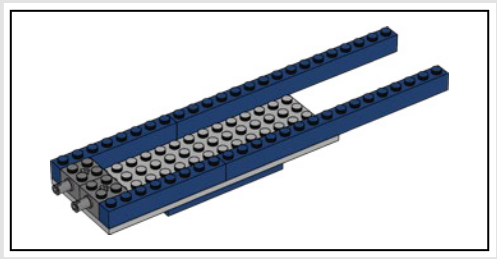

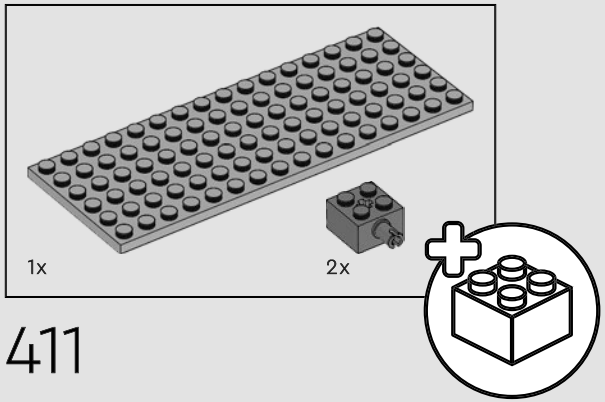

411

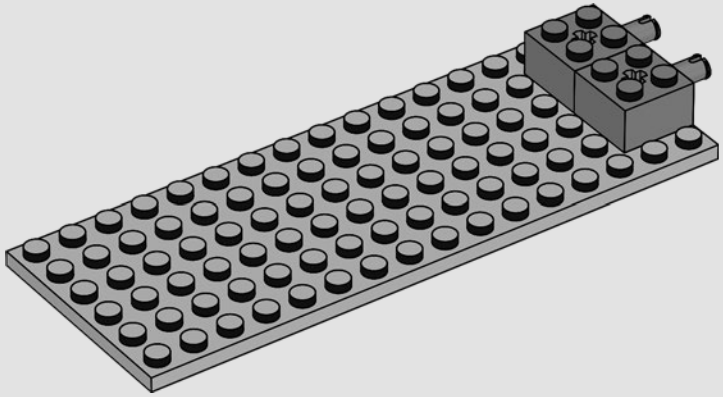

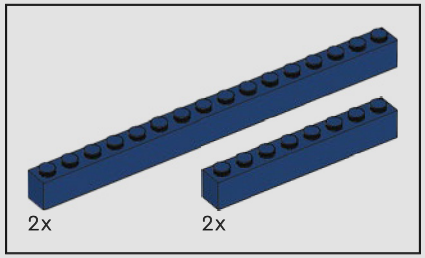

412

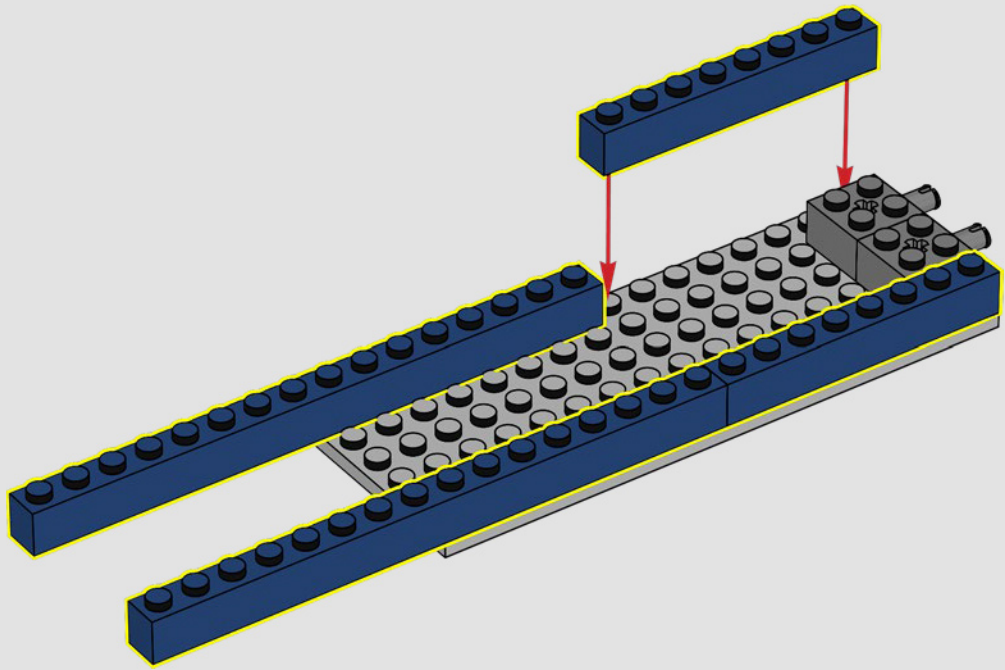

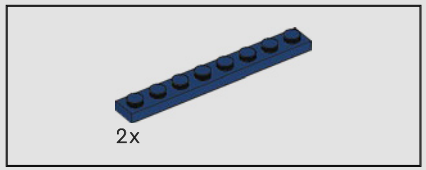

413

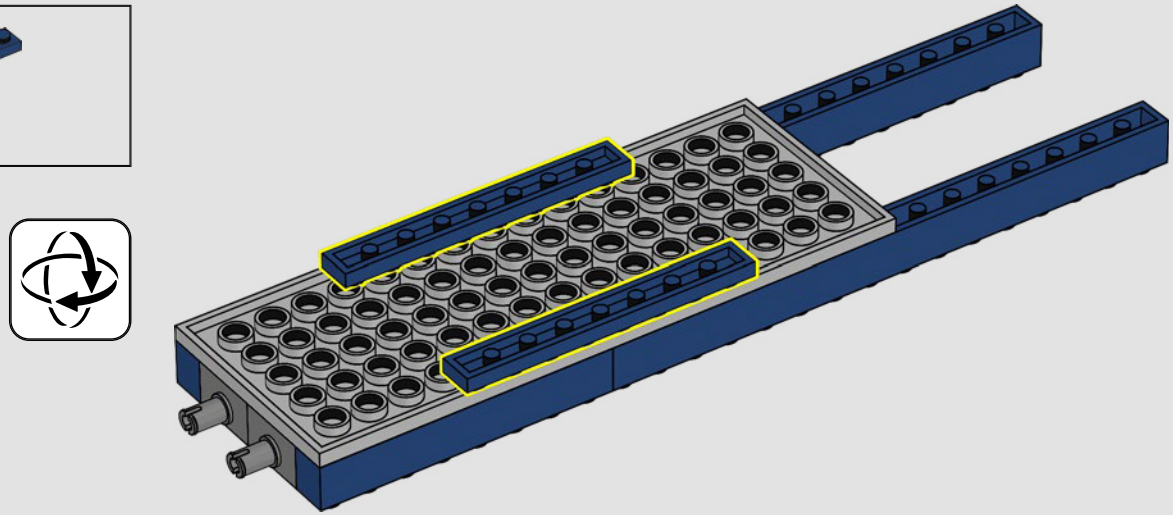

414

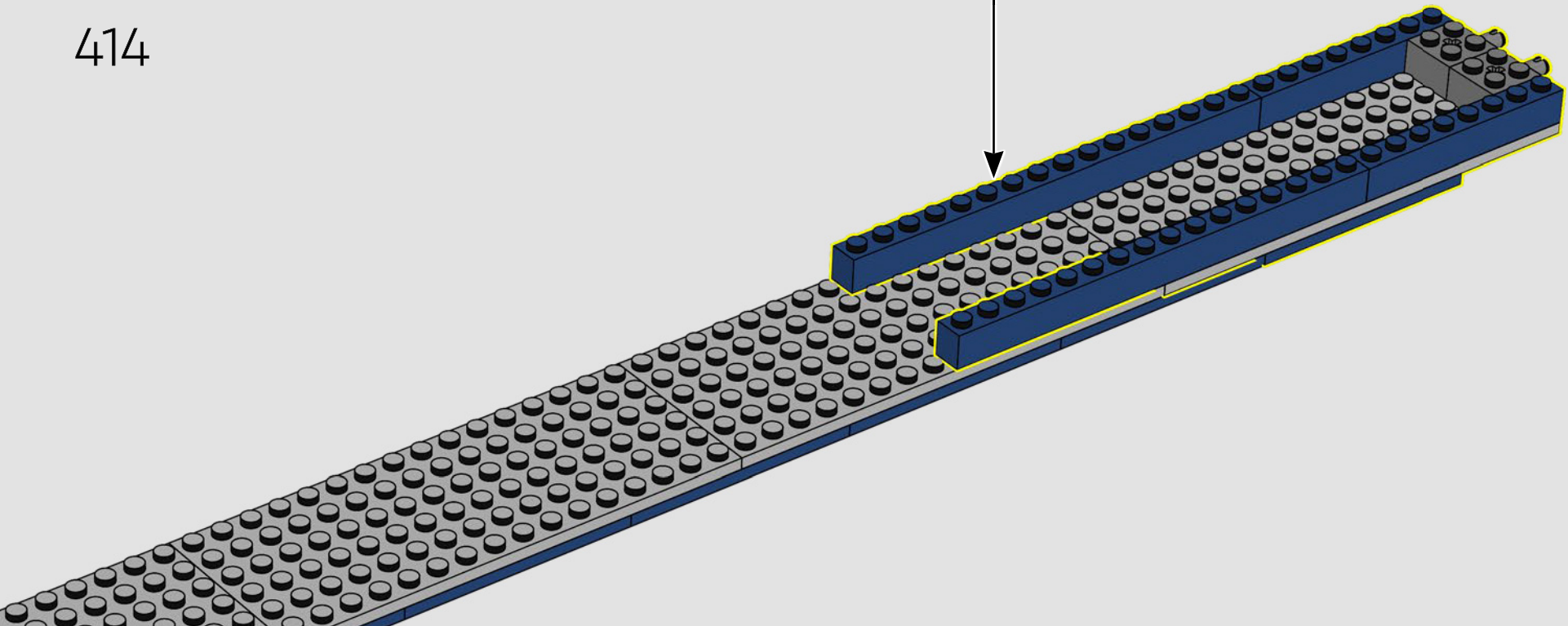

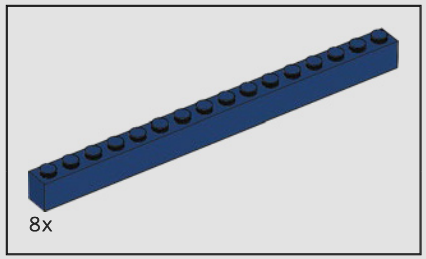

415

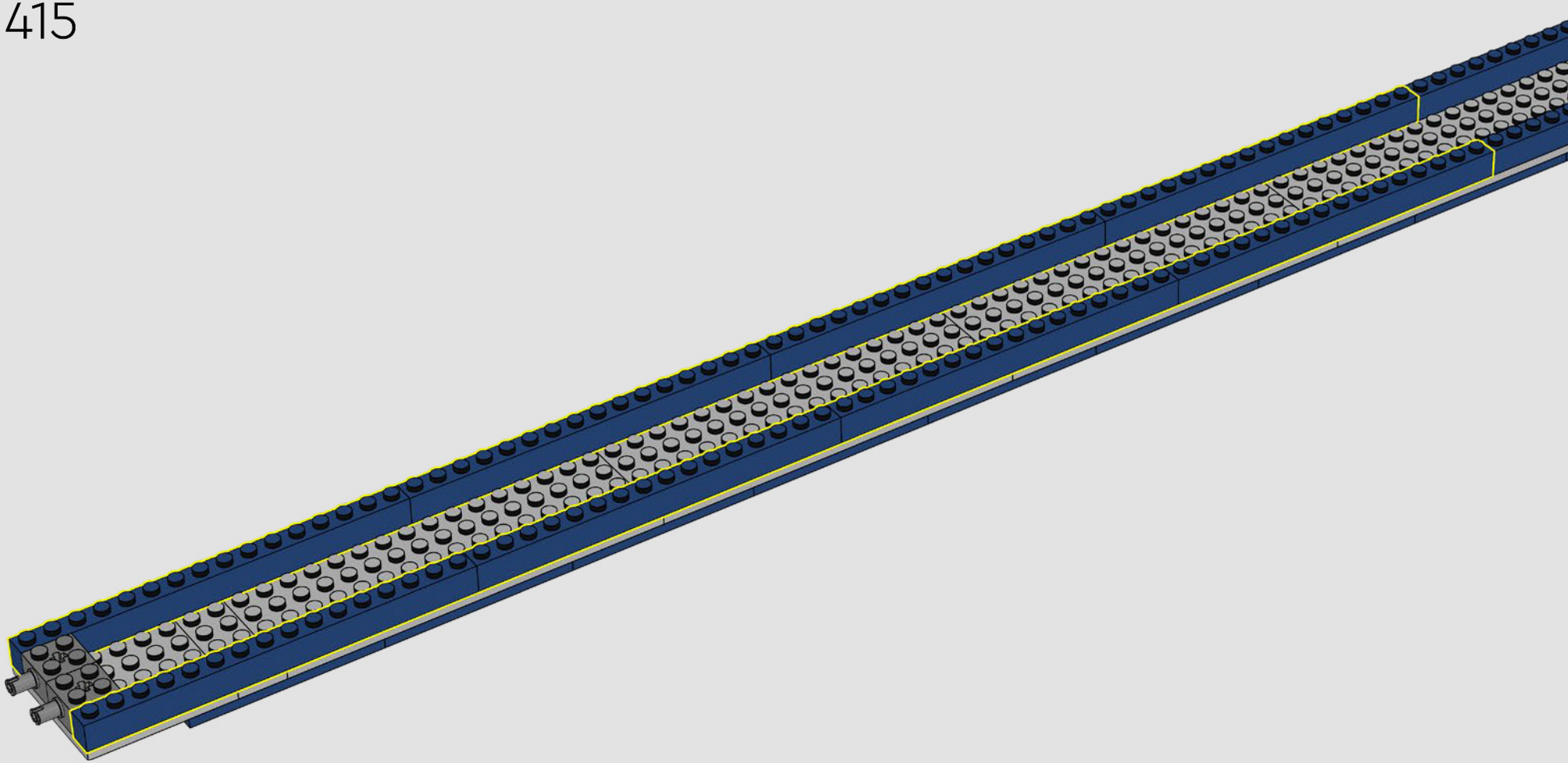

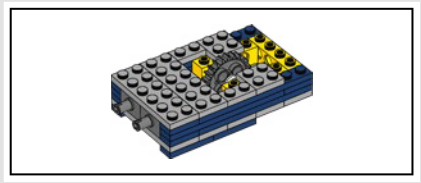

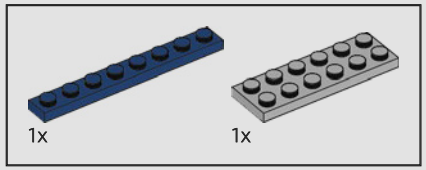

416

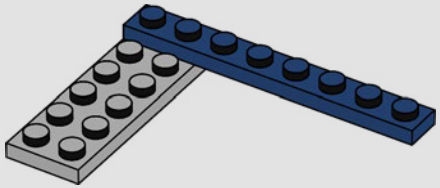

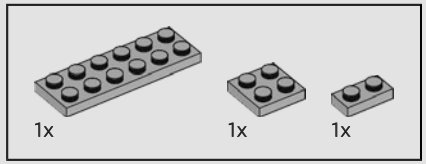

417

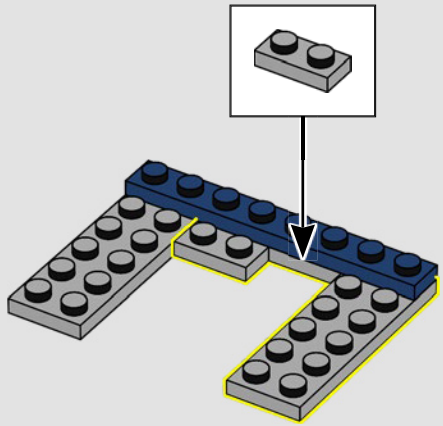

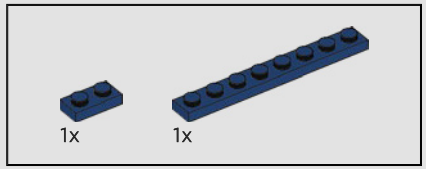

418

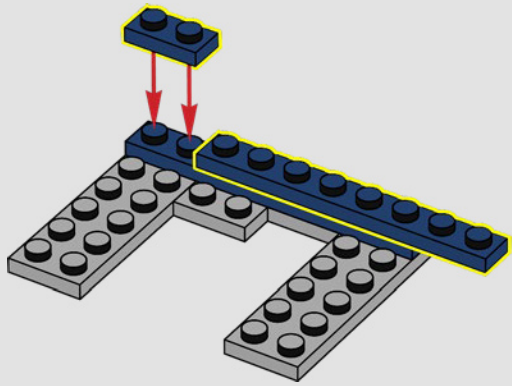

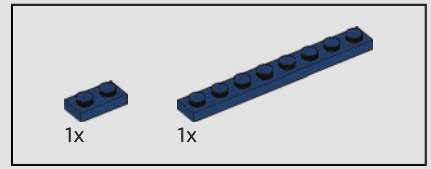

419

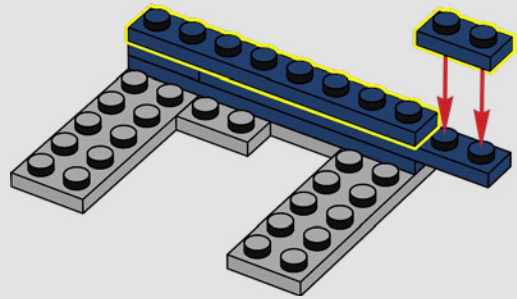

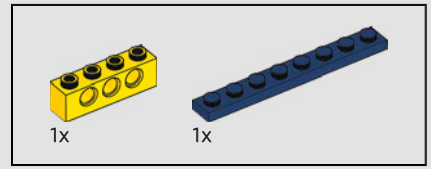

420

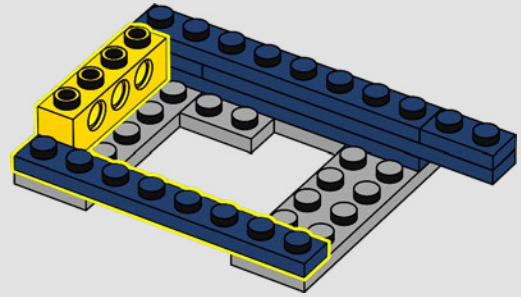

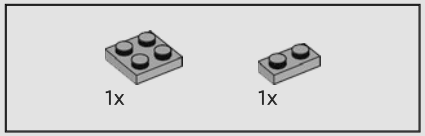

421

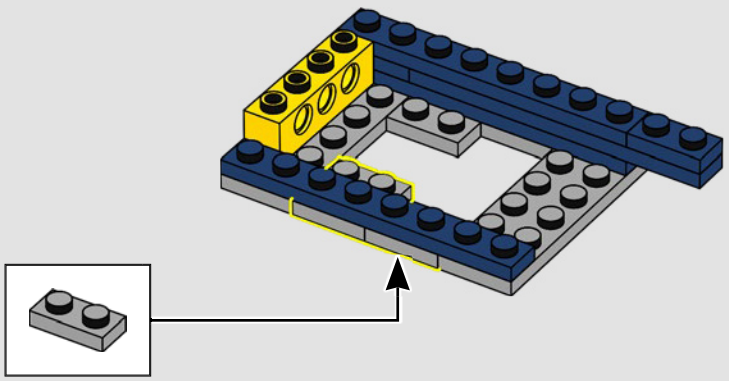

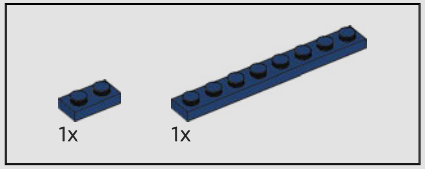

422

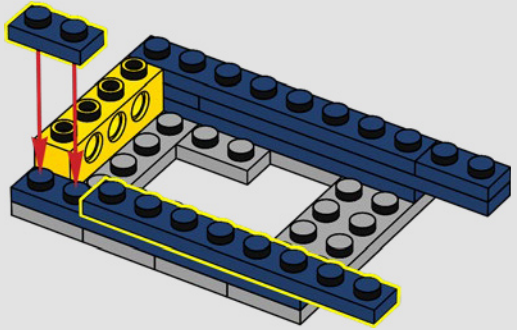

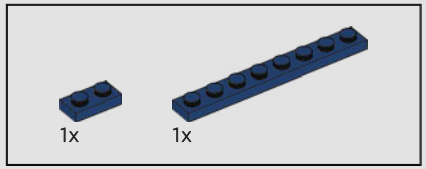

423

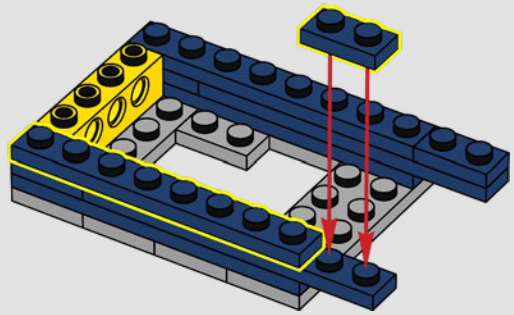

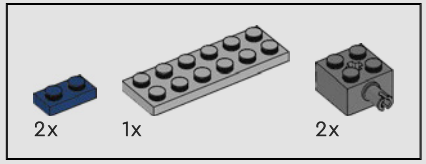

424

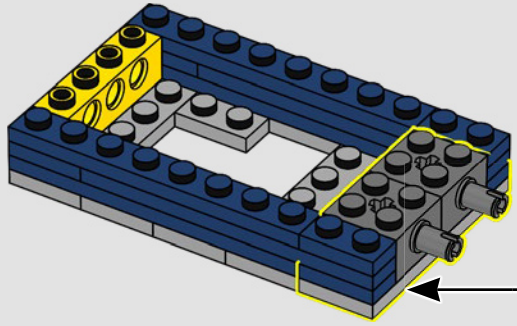

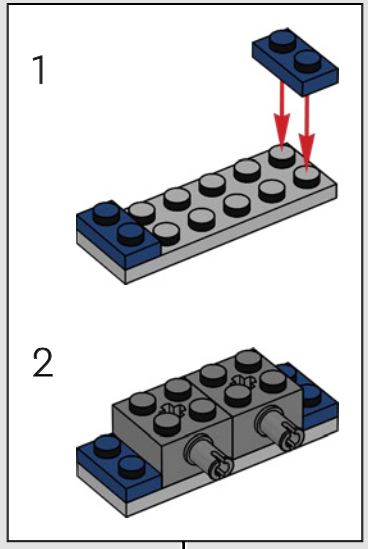

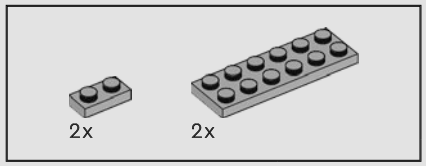

425

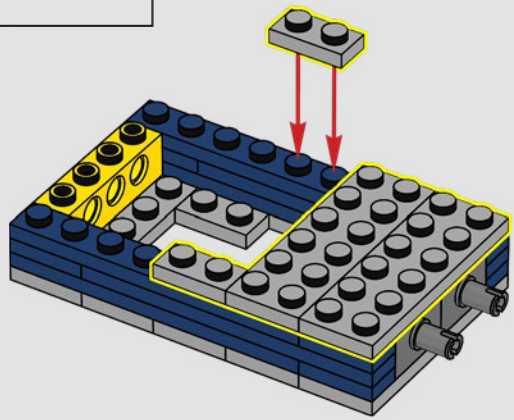

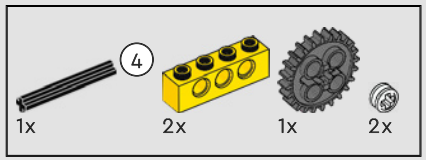

426

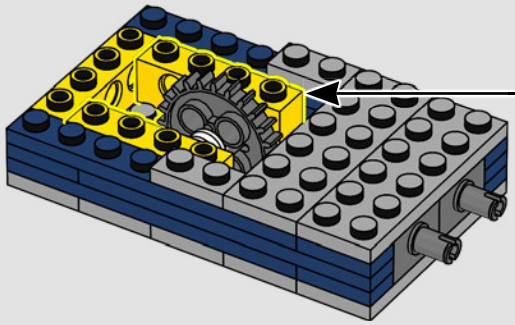

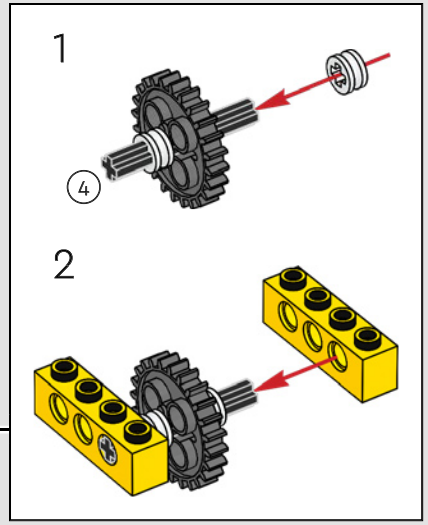

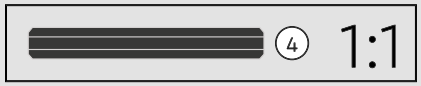

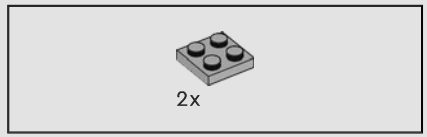

427

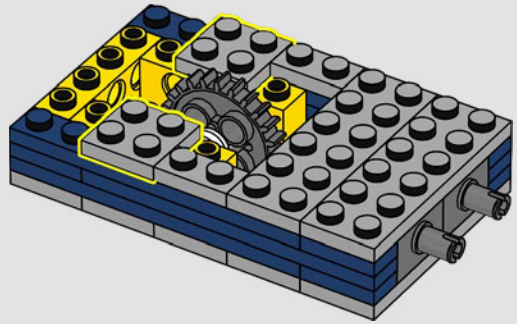

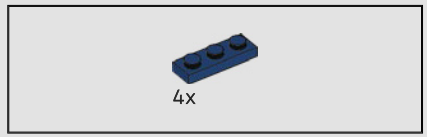

428

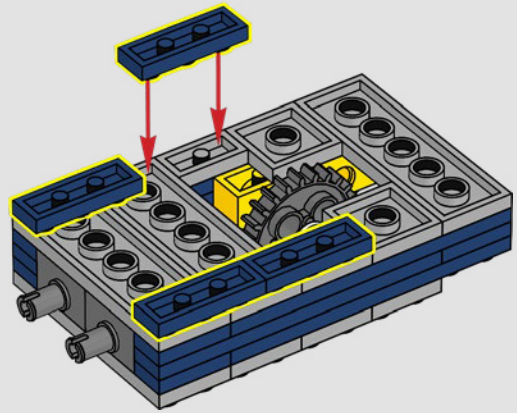

429

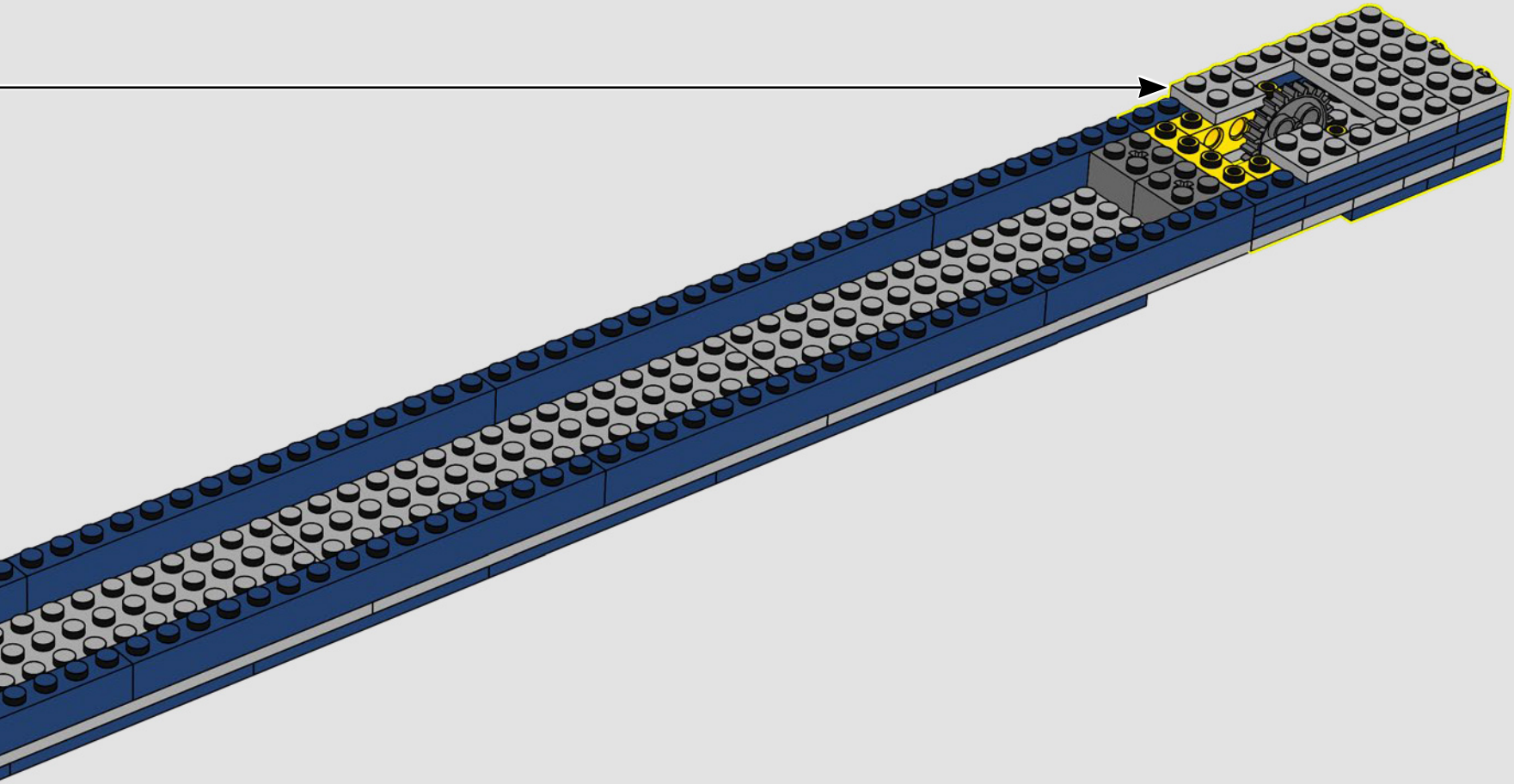

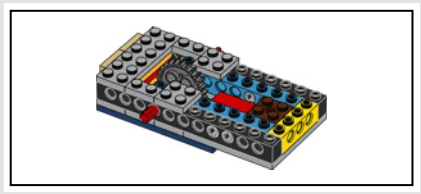

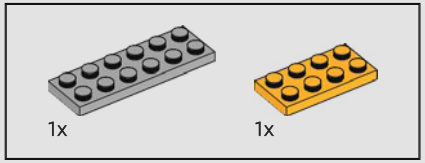

430

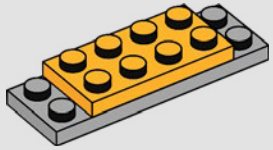

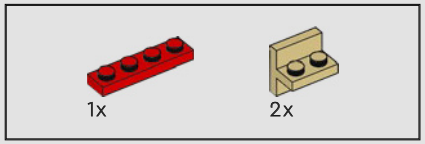

431

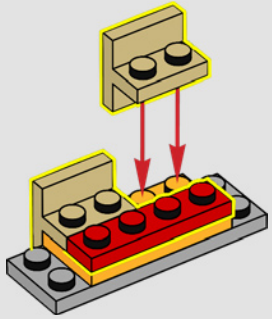

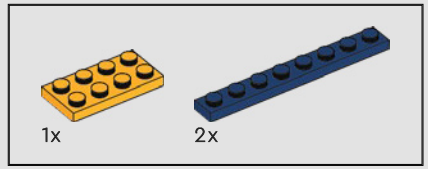

432

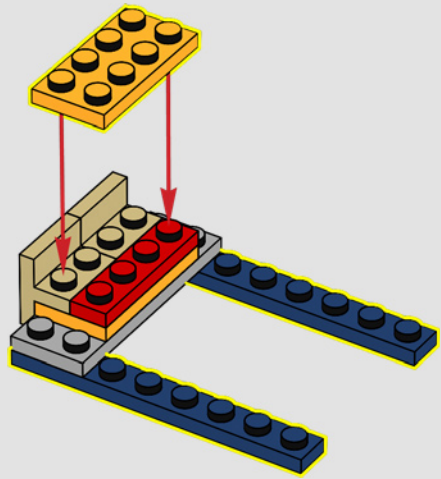

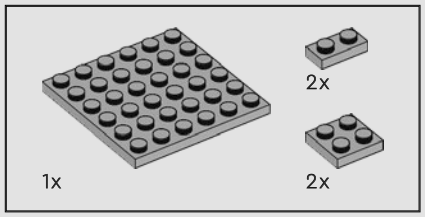

433

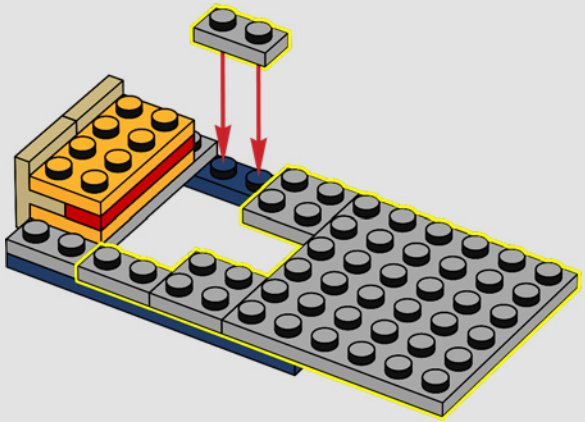

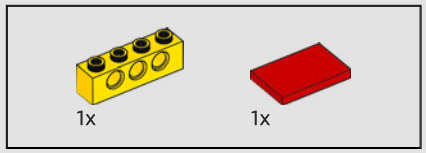

434

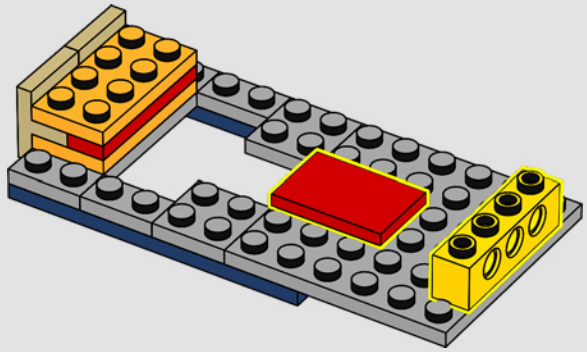

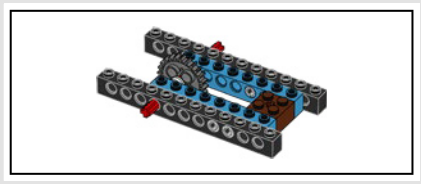

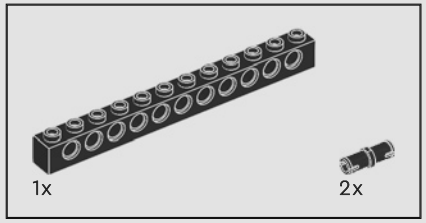

435

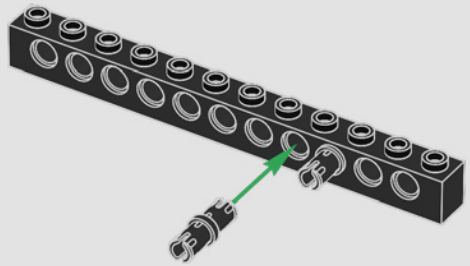

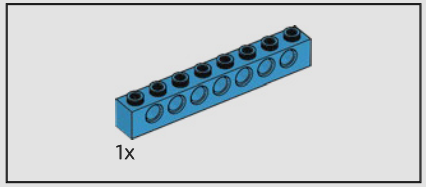

436

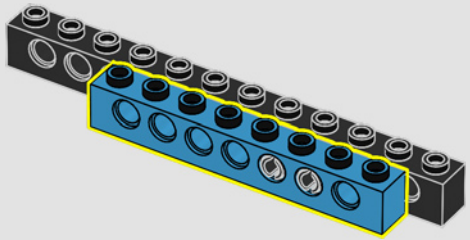

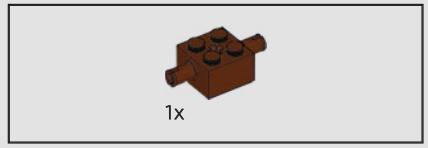

437

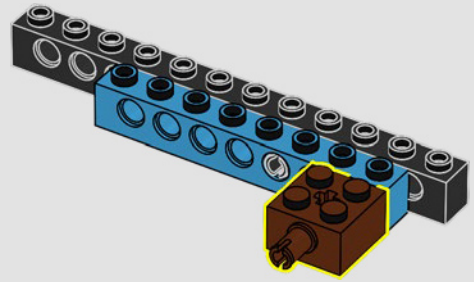

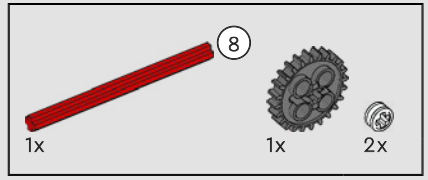

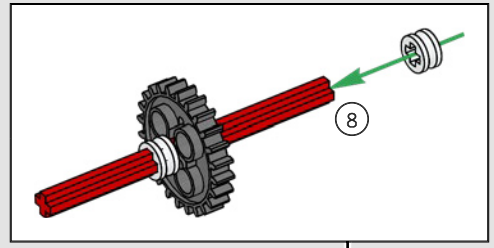

438

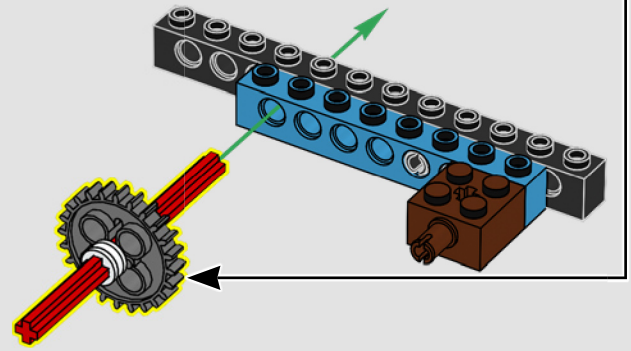

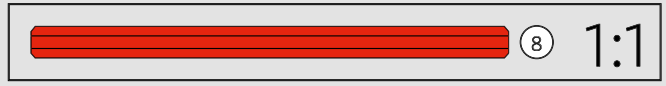

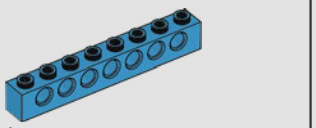

439

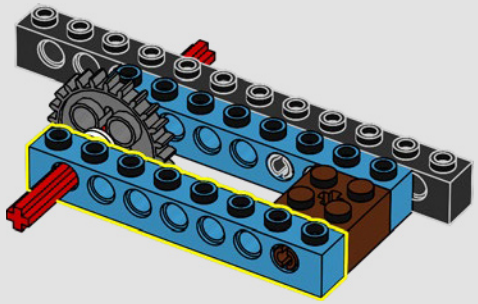

440

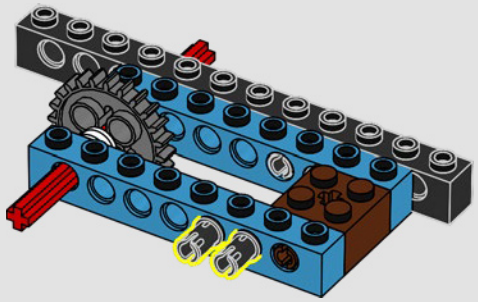

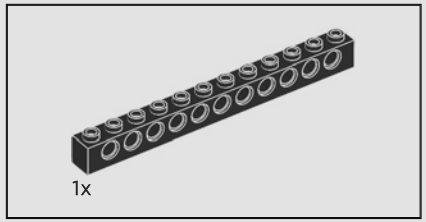

441

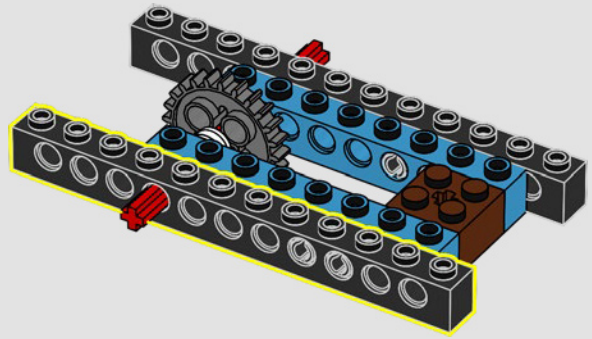

442

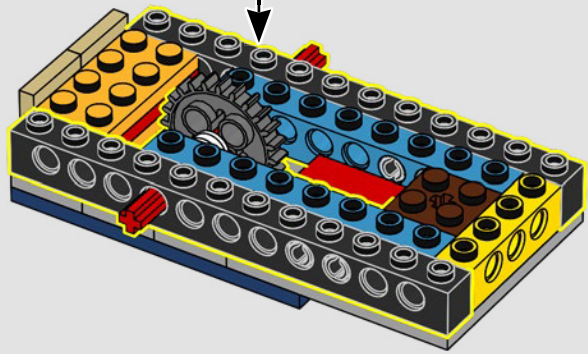

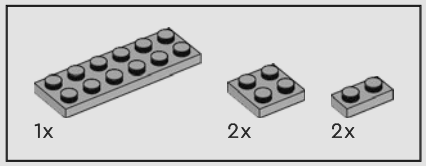

443

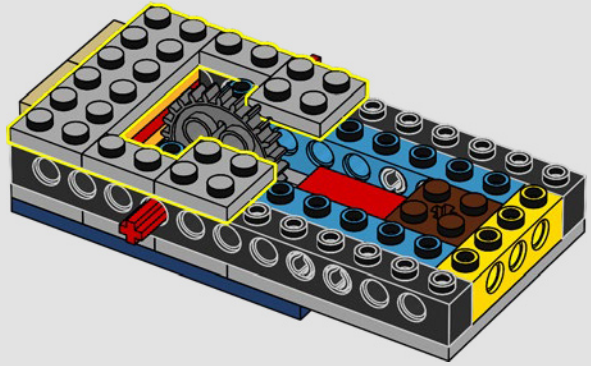

444

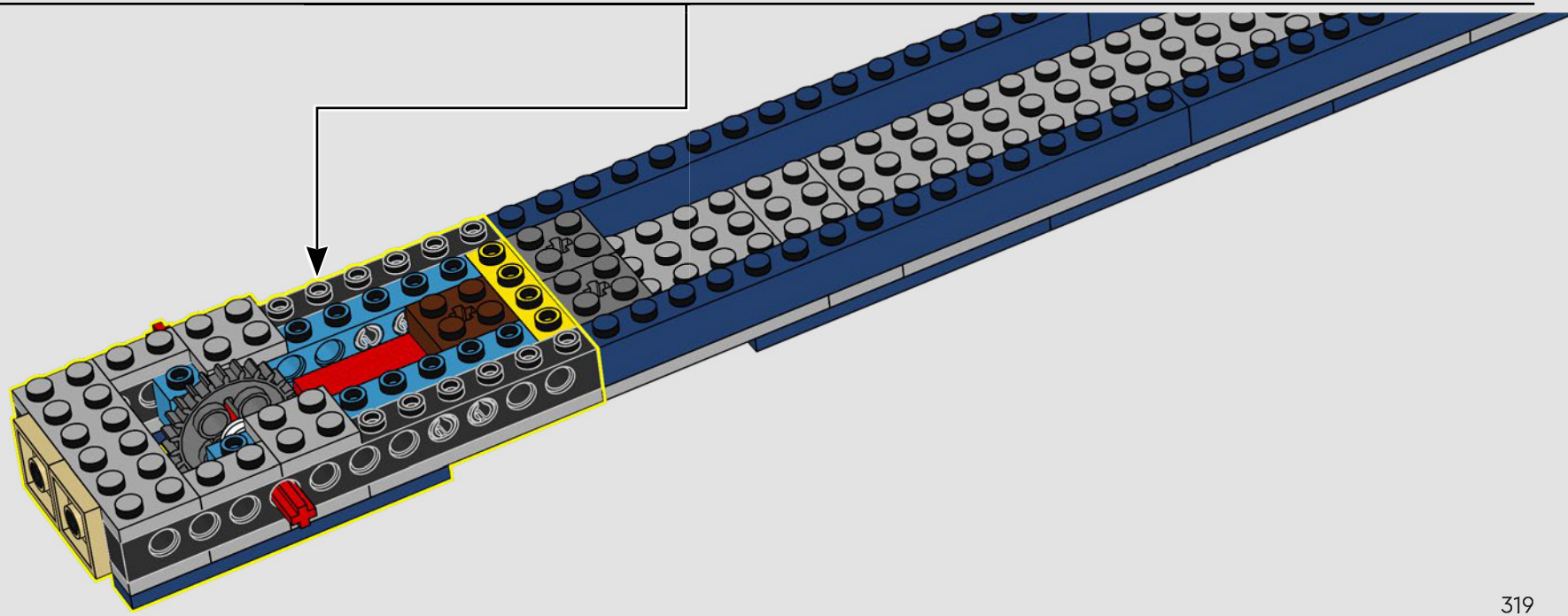

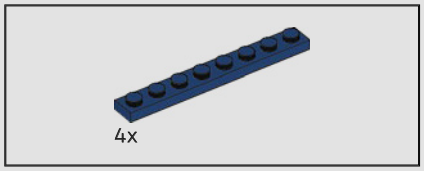

445

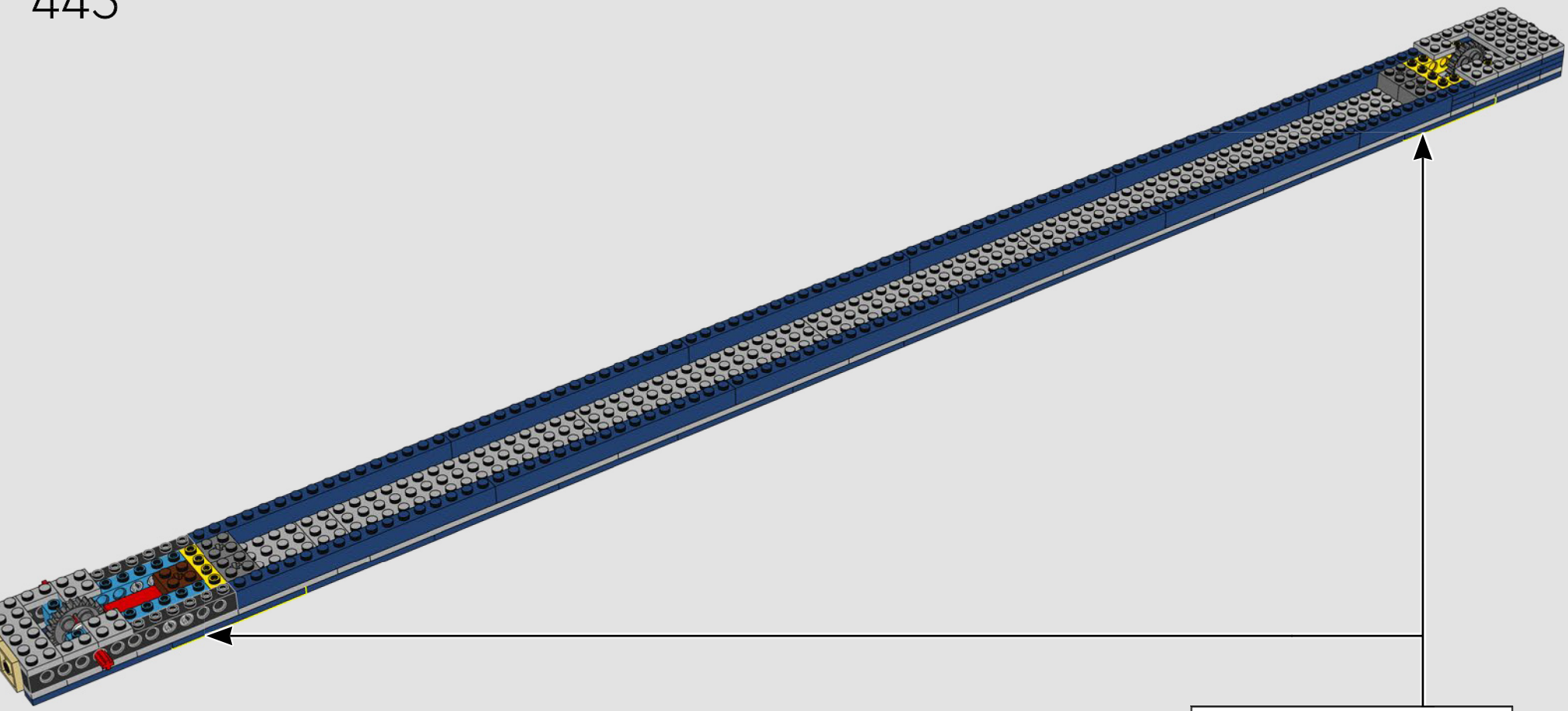

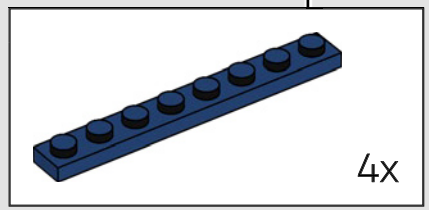

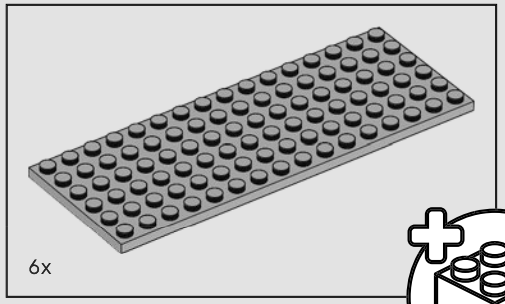

446

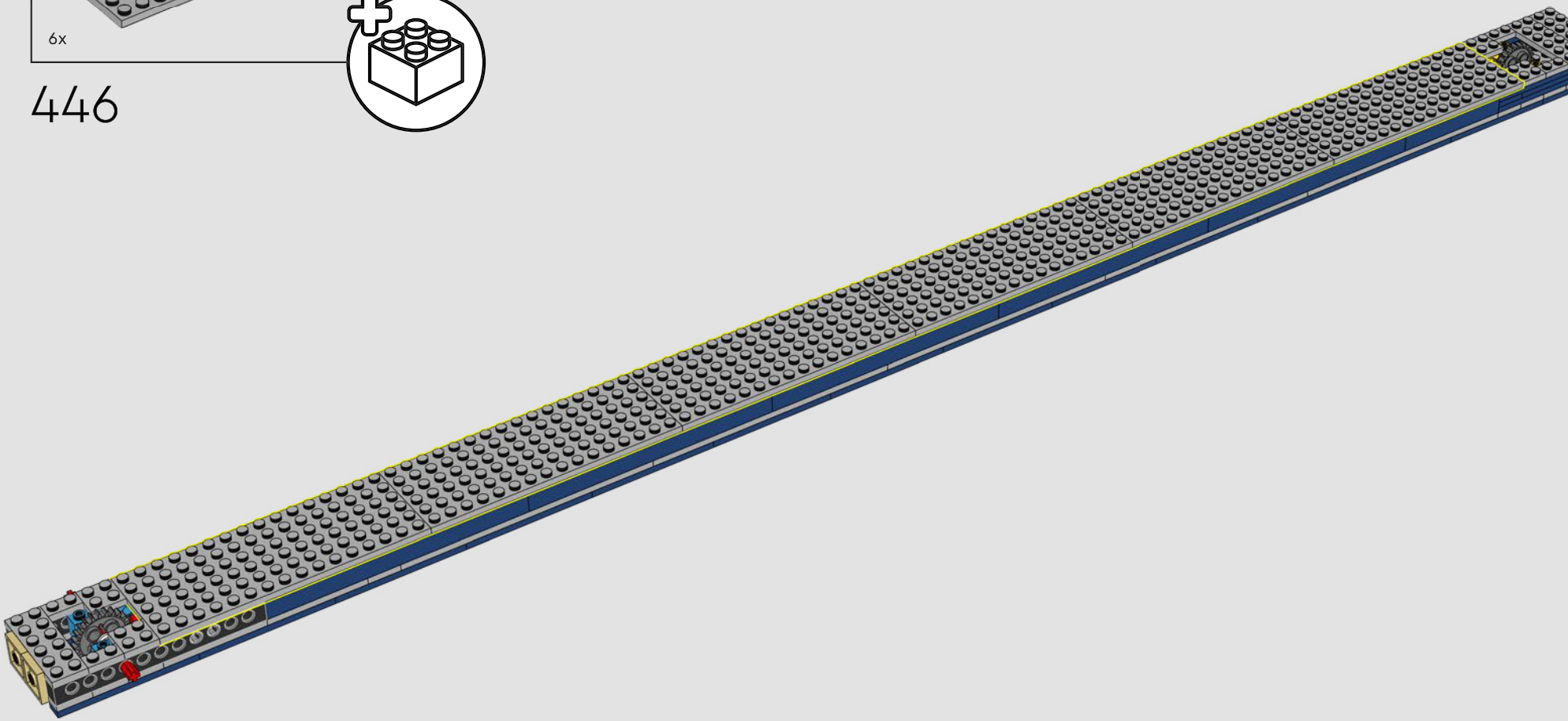

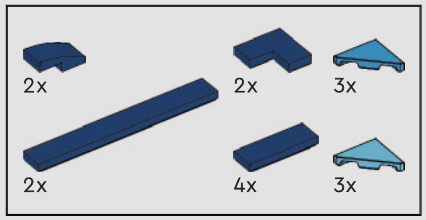

447

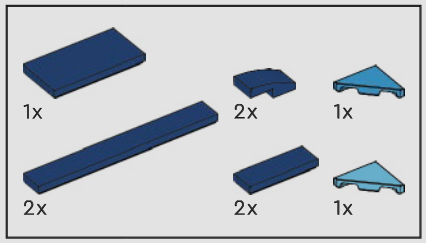

448

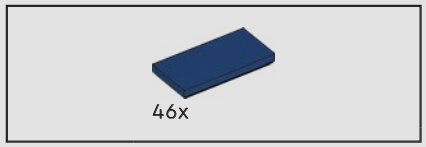

449

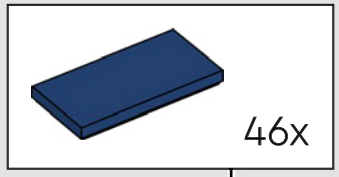

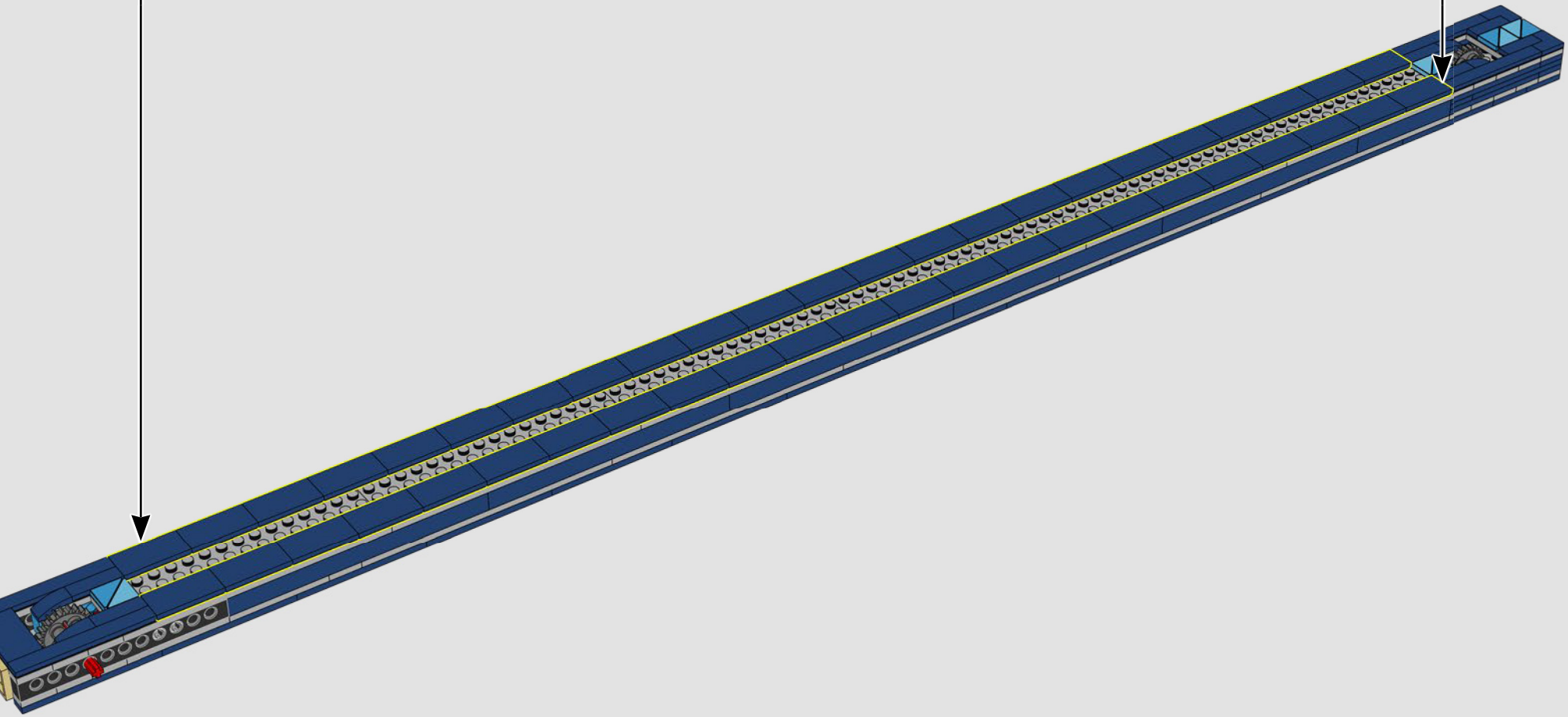

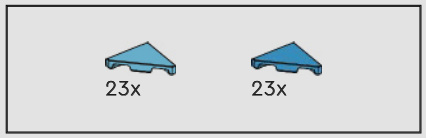

450

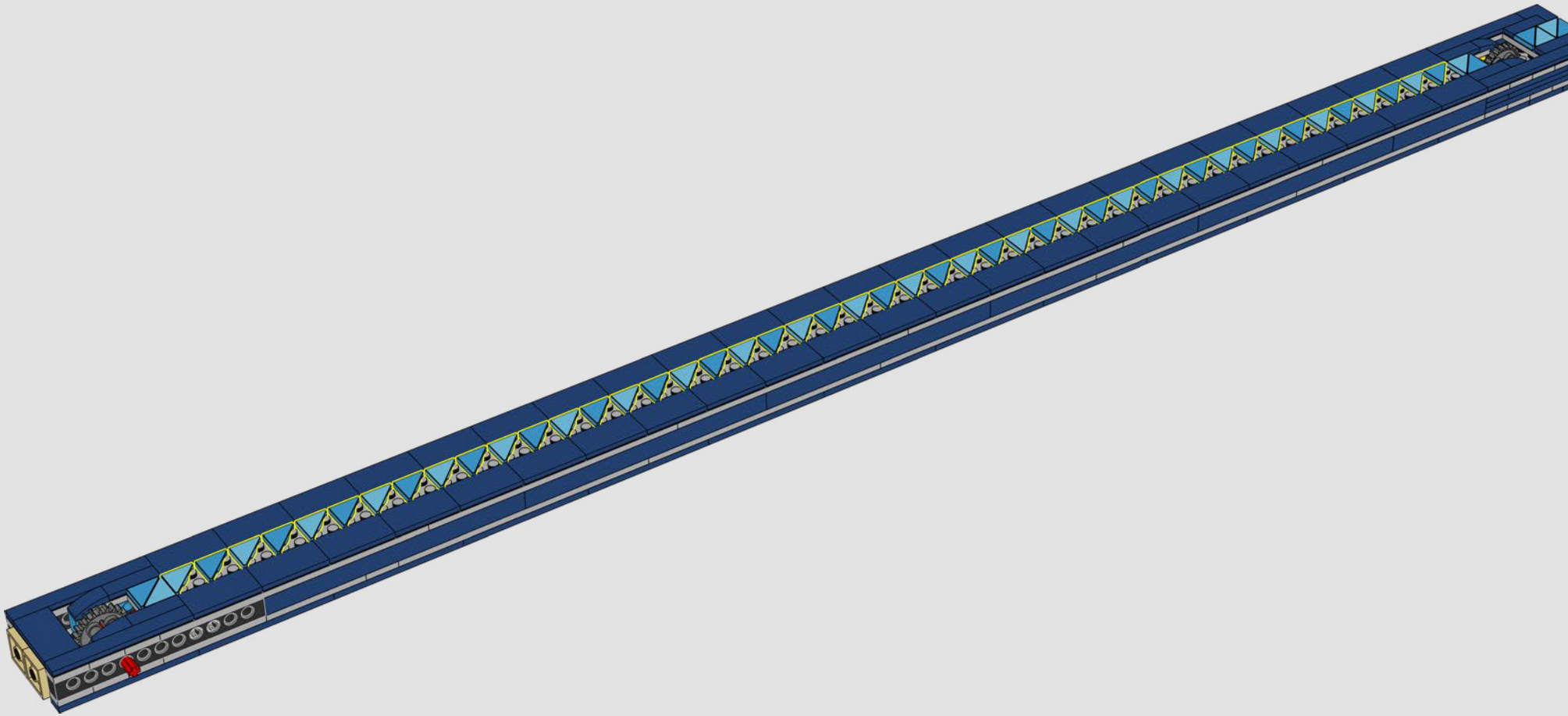

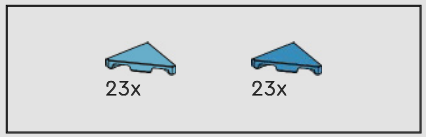

451

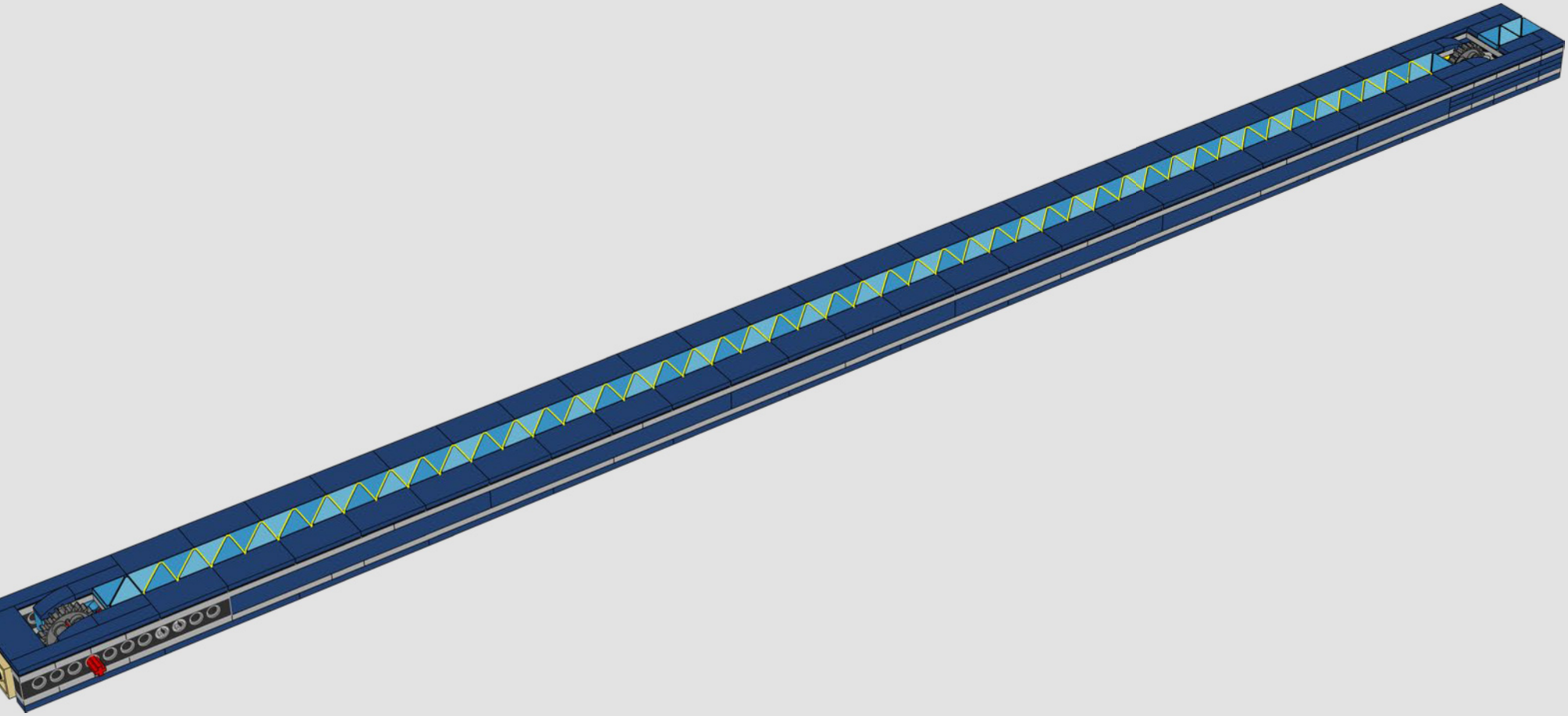

452

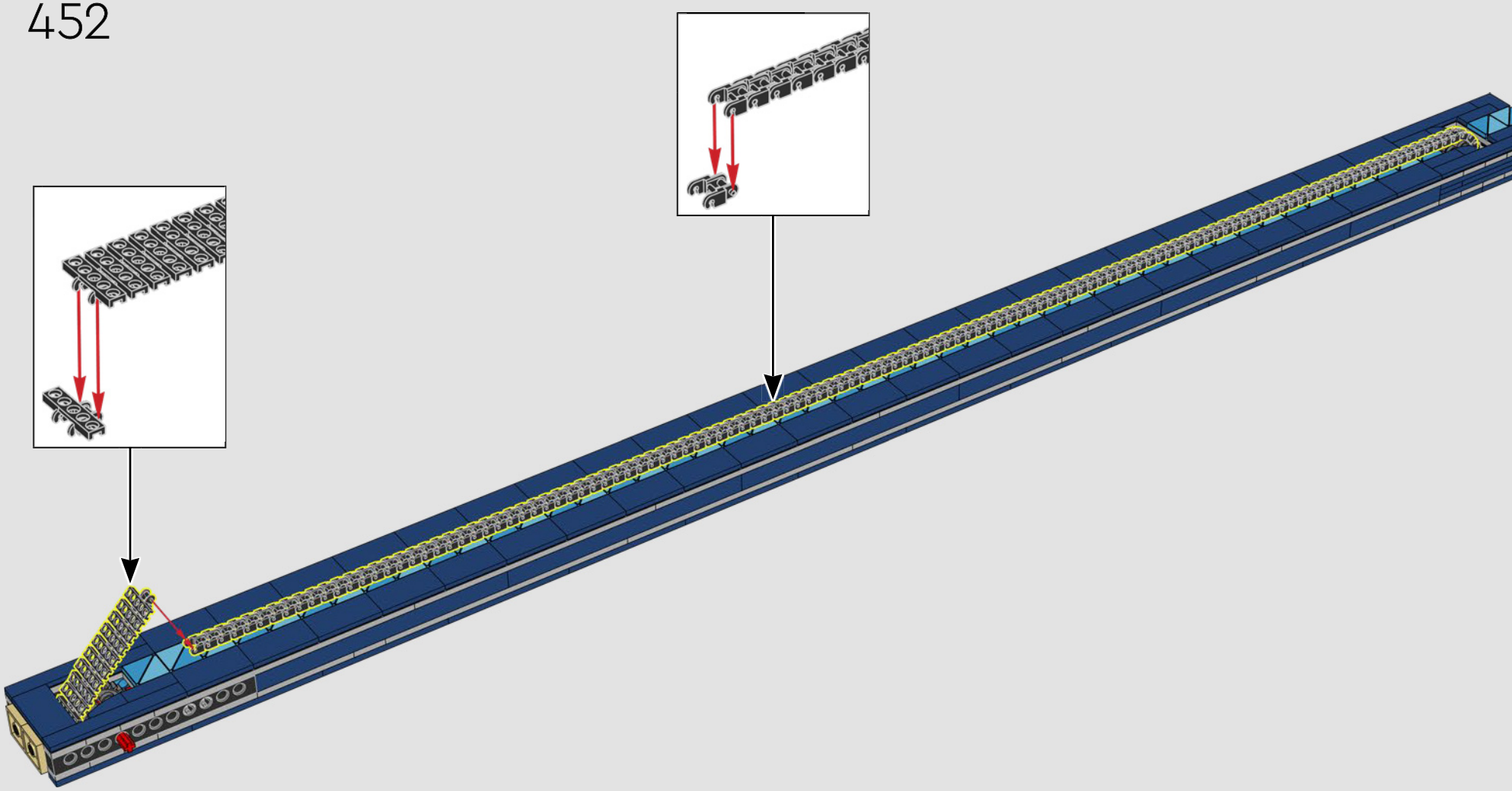

453

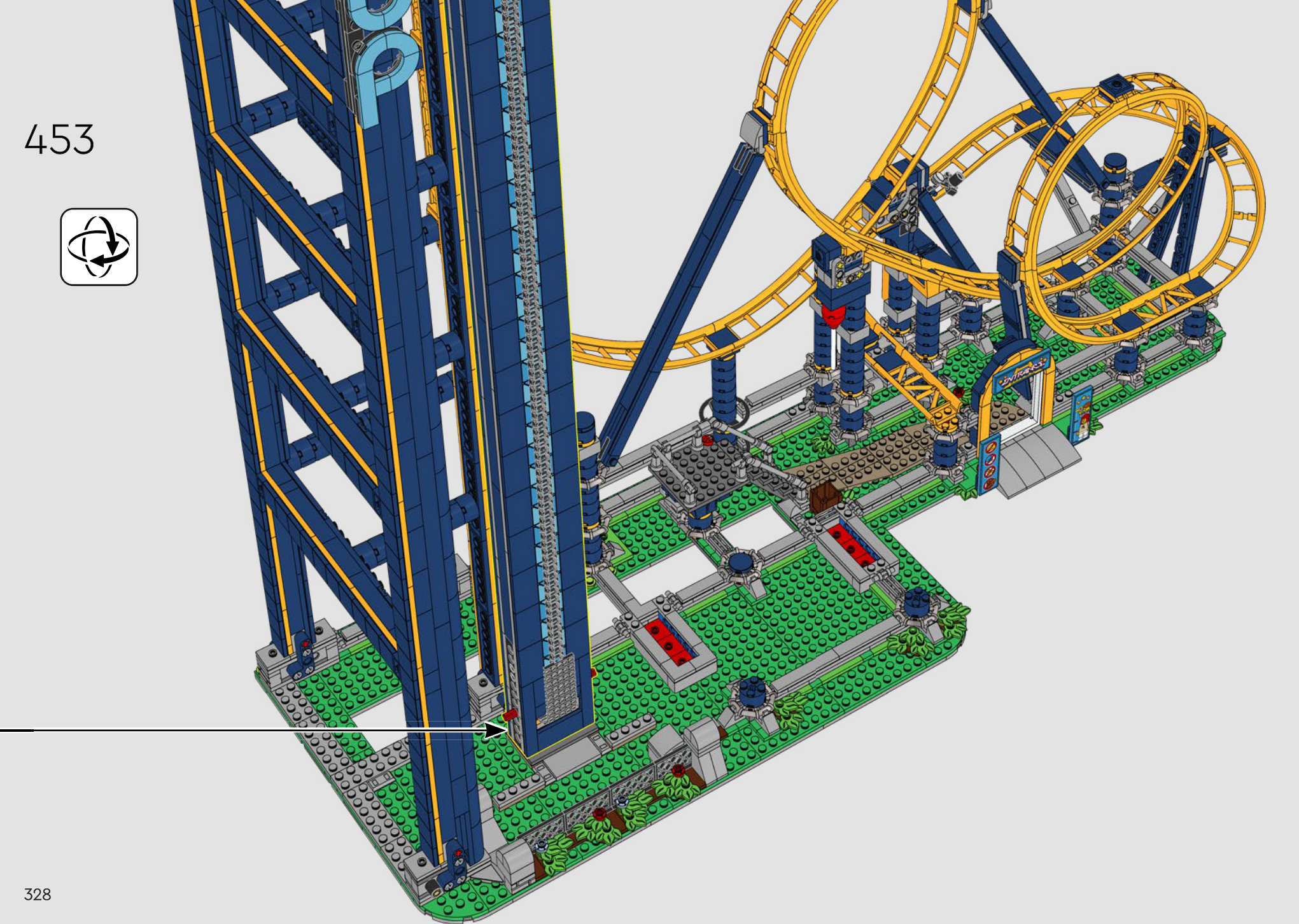

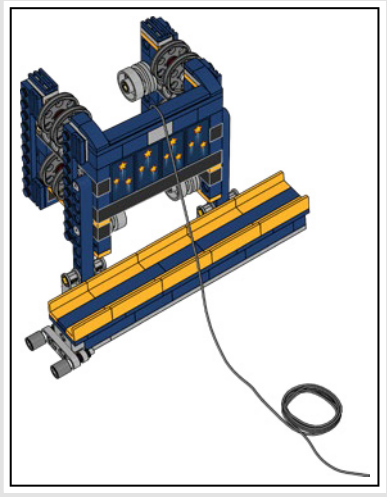

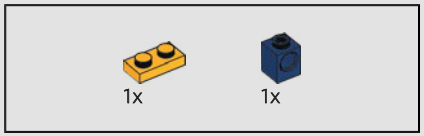

454

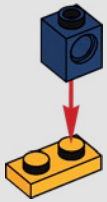

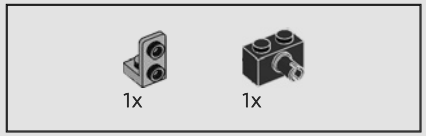

455

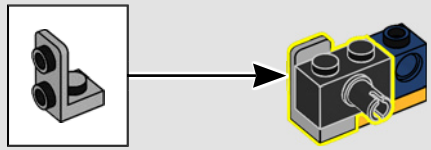

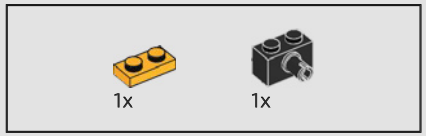

456

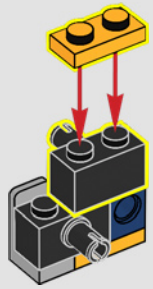

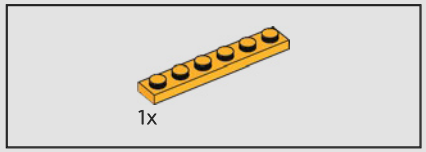

457

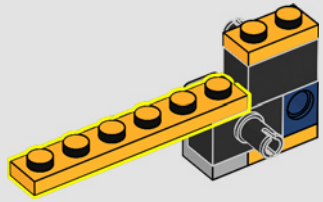

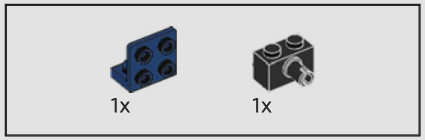

458

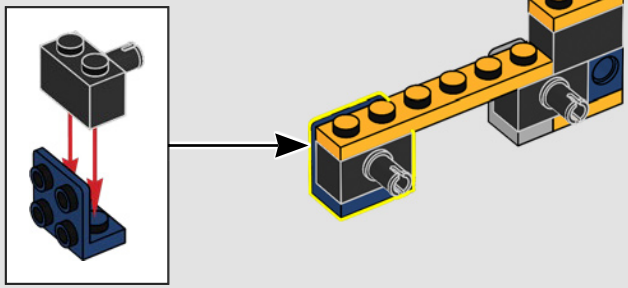

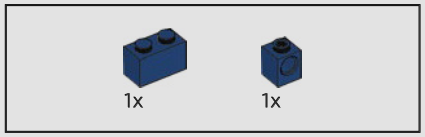

459

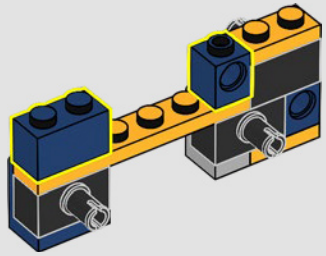

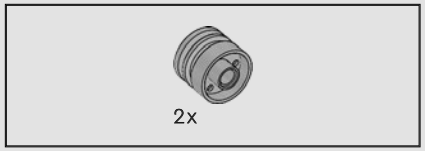

460

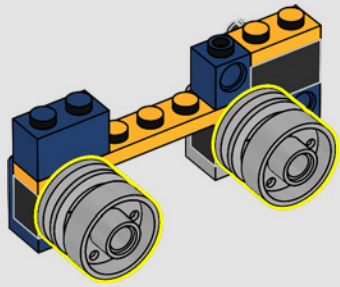

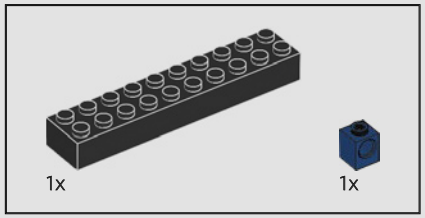

461

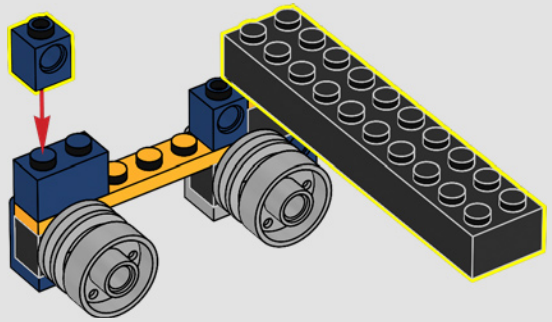

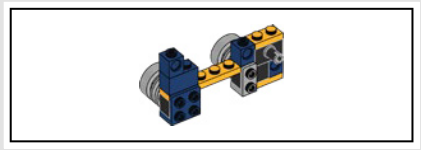

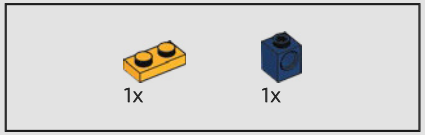

462

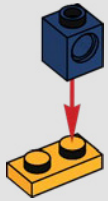

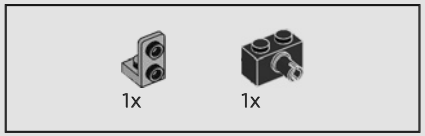

463

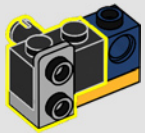

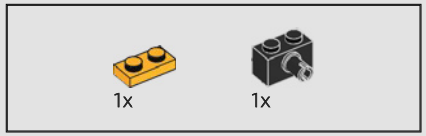

464

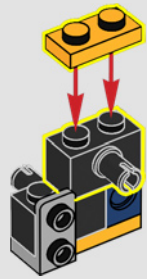

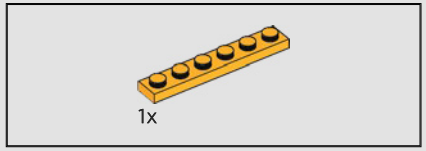

465

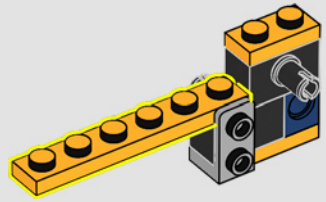

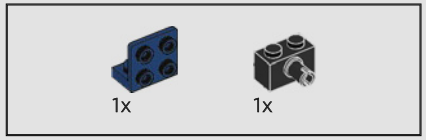

466

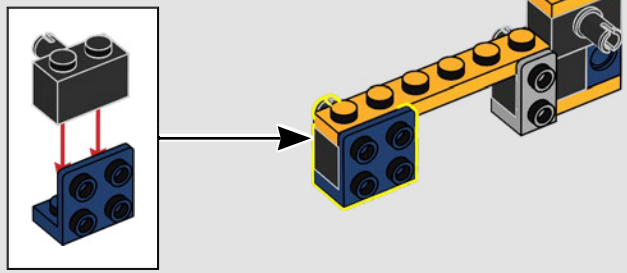

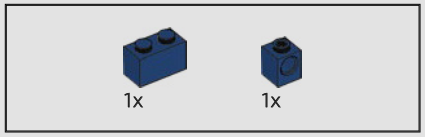

467

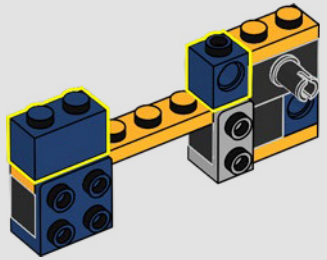

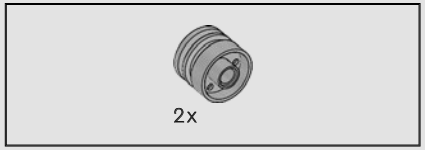

468

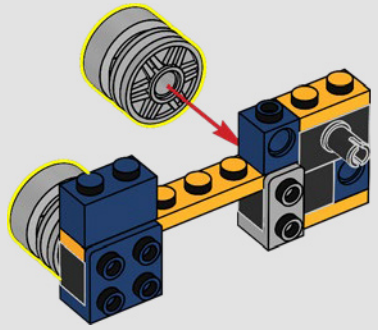

469

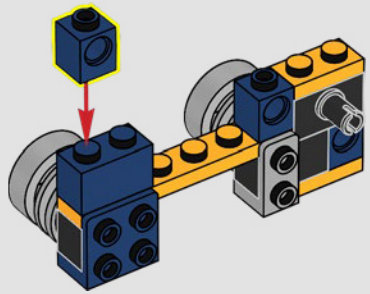

470

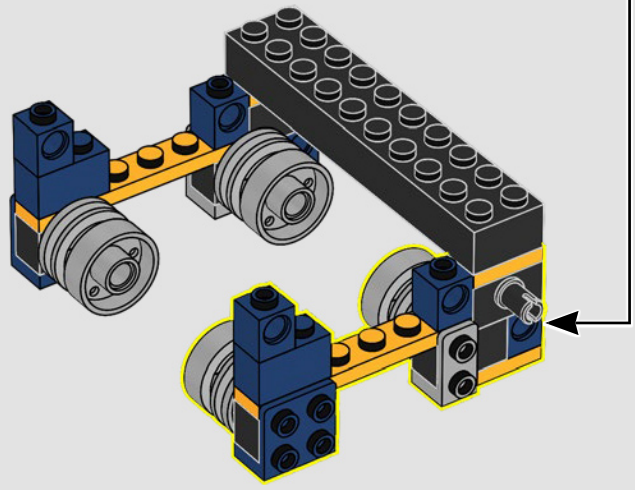

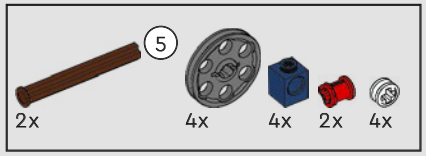

471

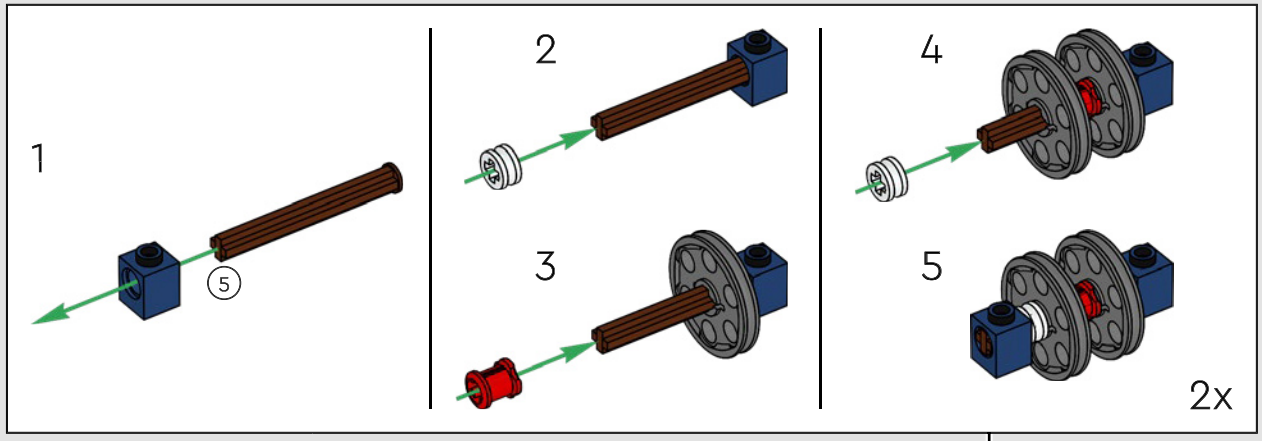

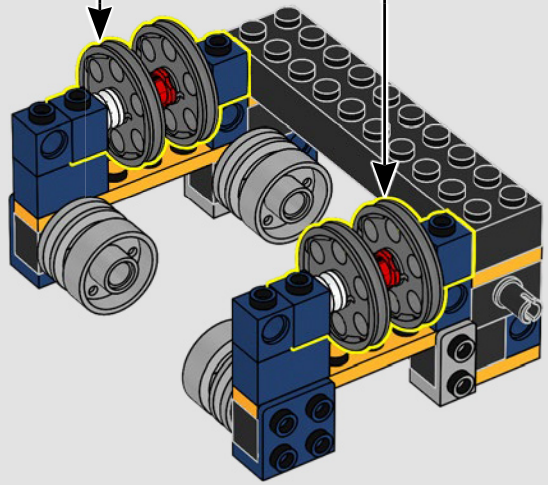

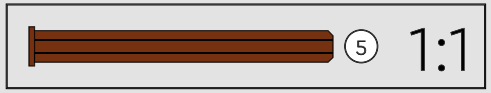

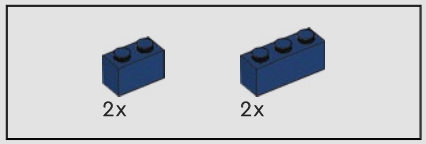

472

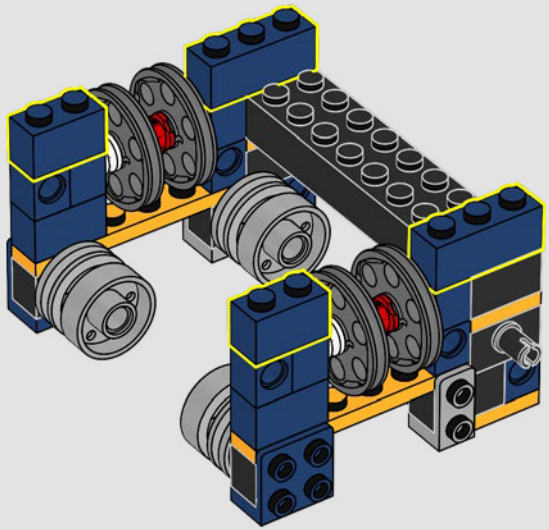

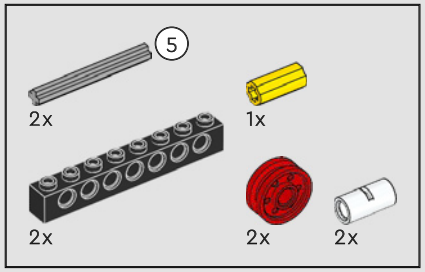

473

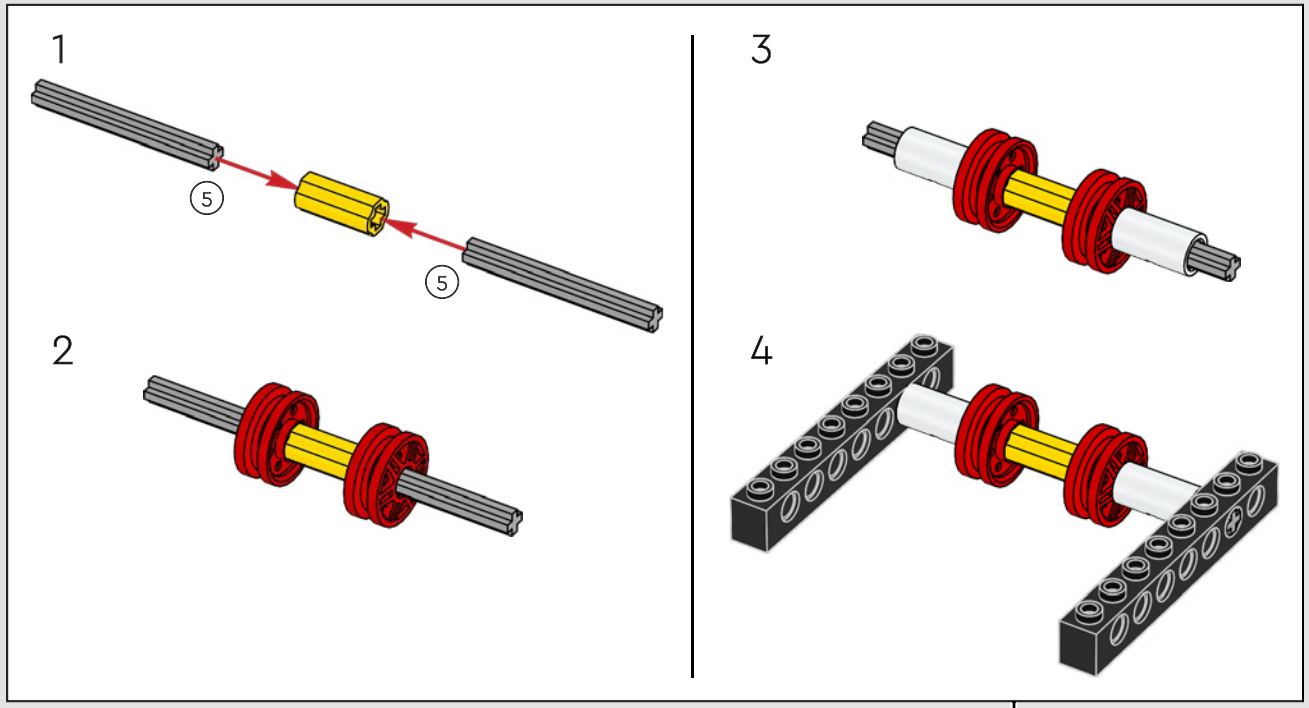

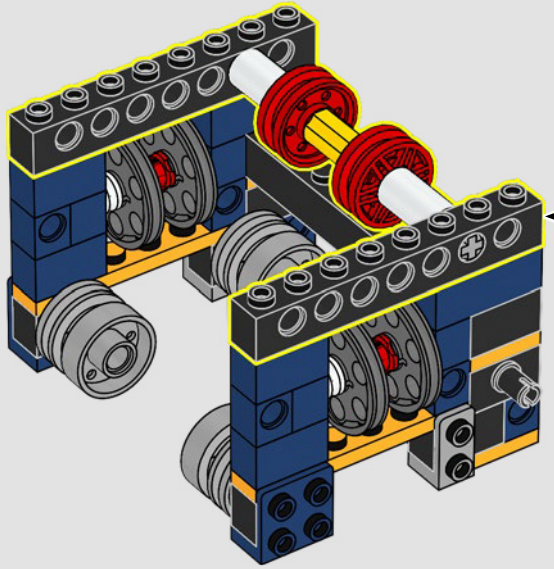

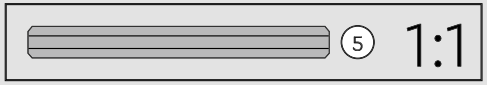

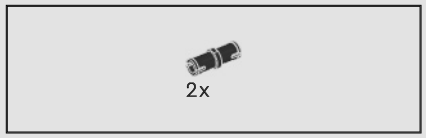

474

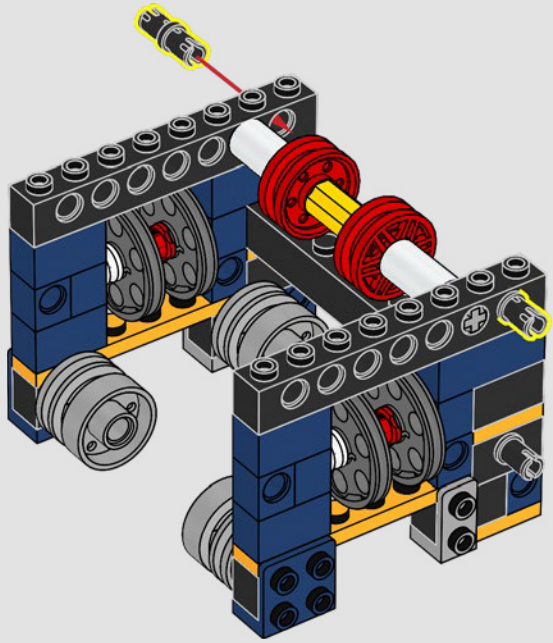

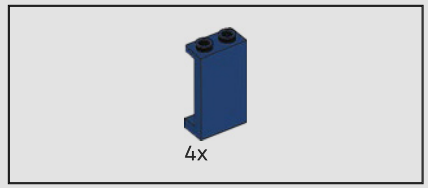

475

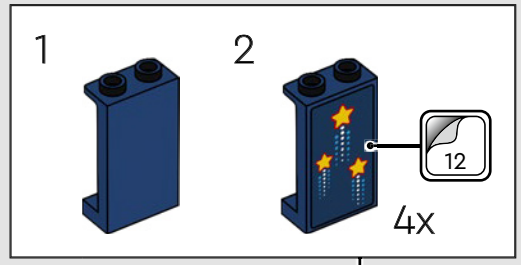

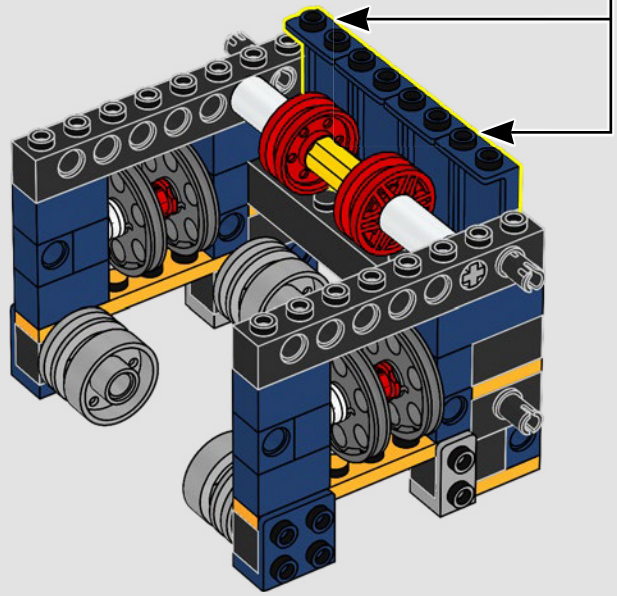

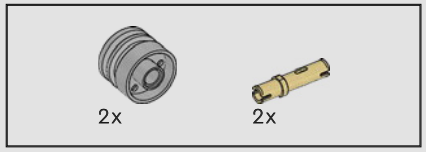

476

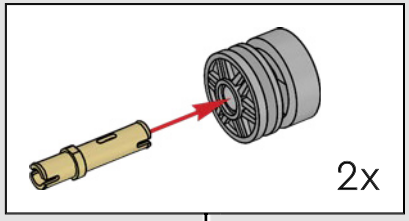

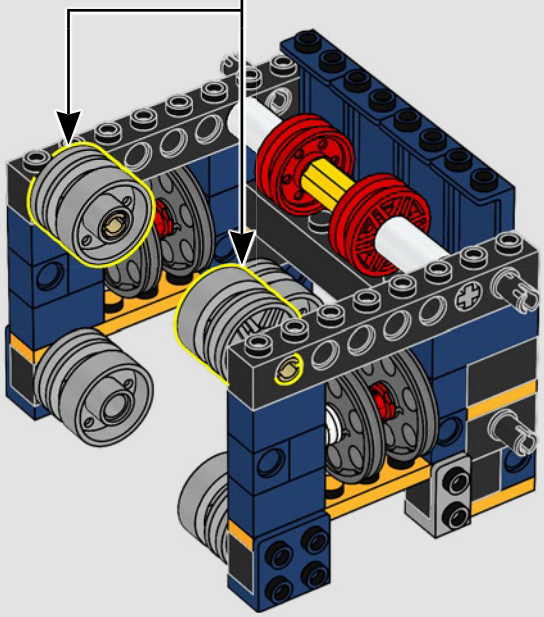

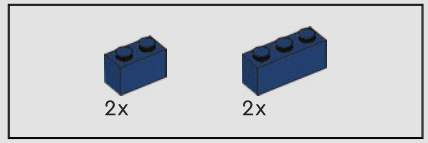

477

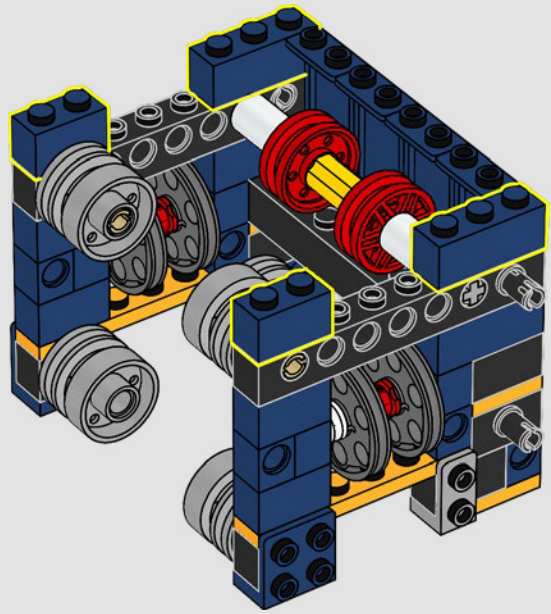

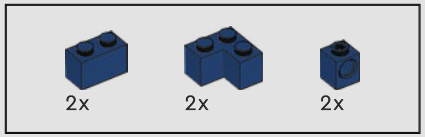

478

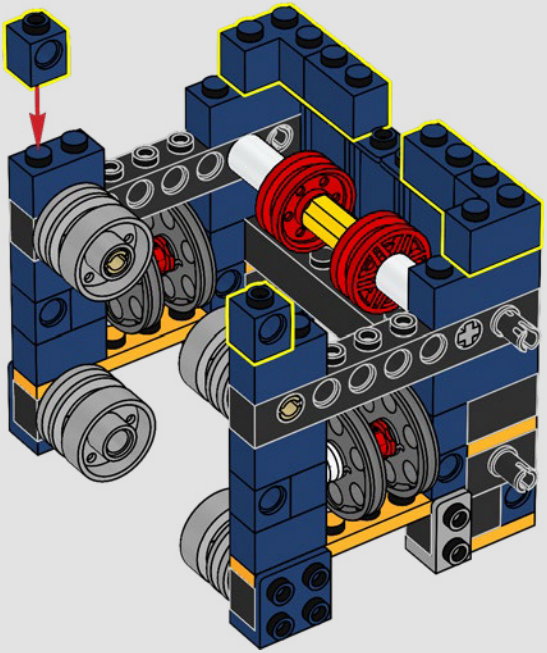

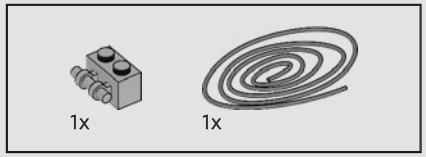

479

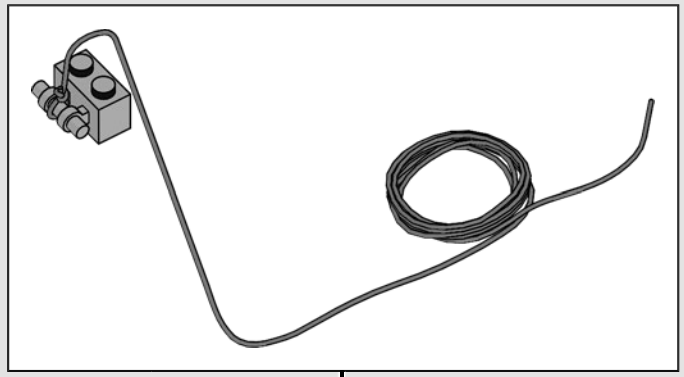

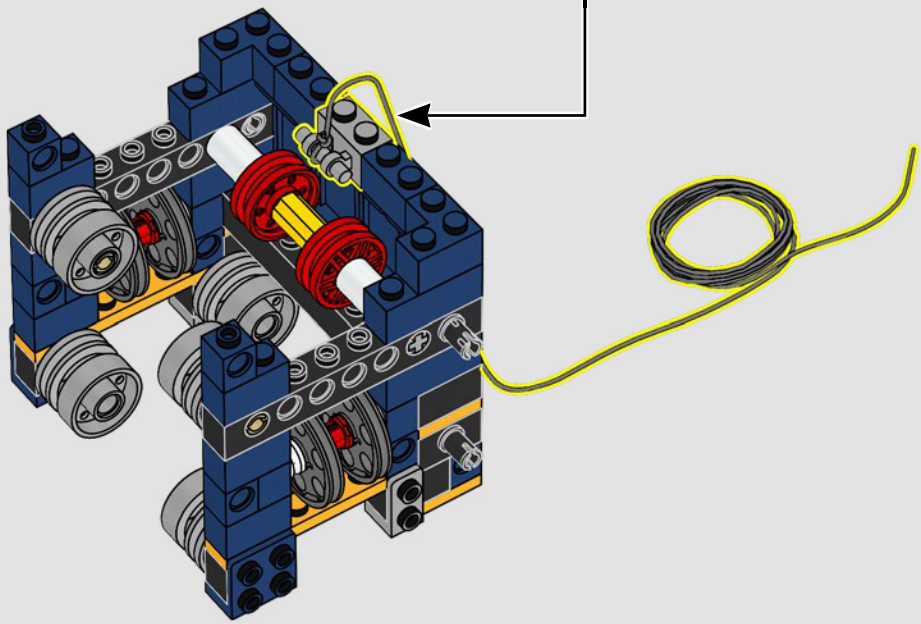

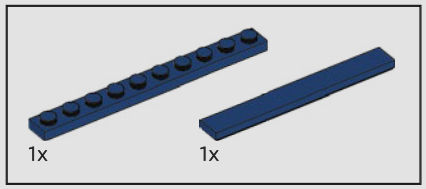

480

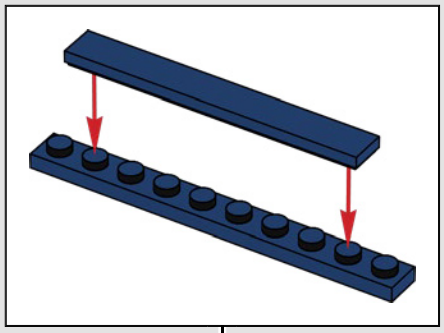

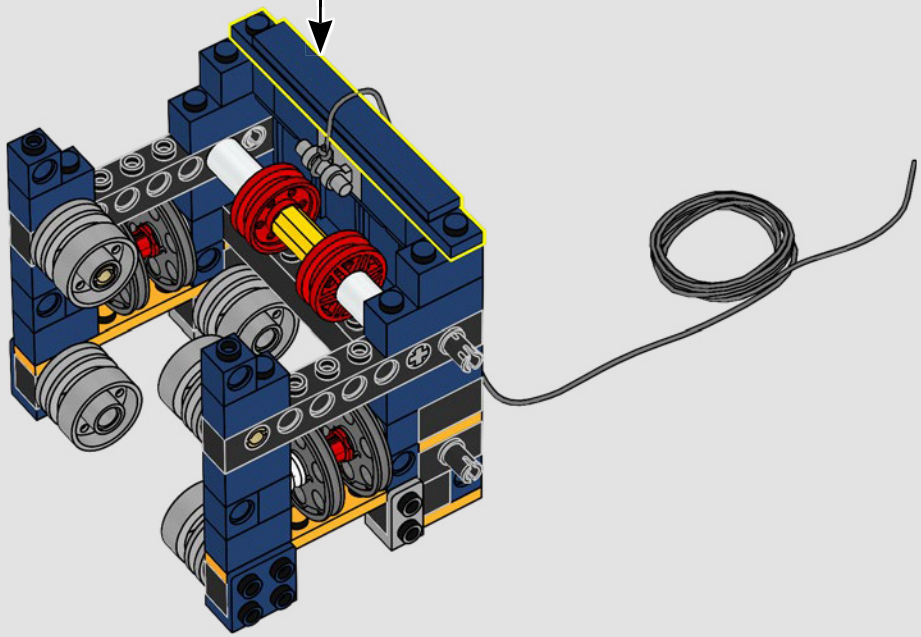

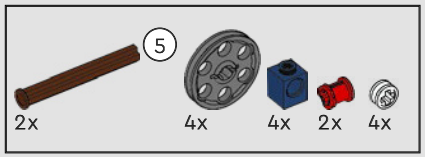

481

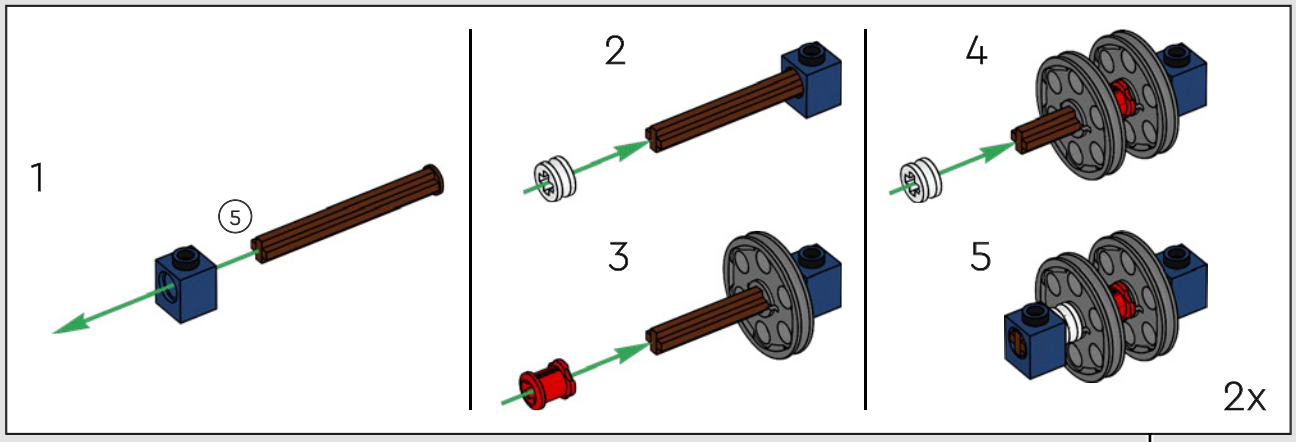

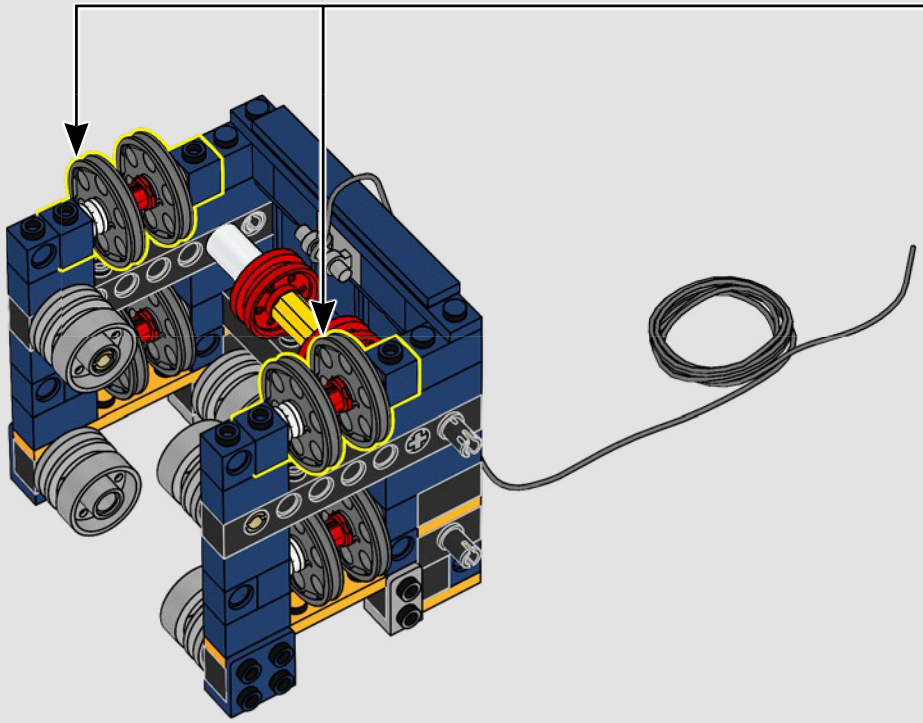

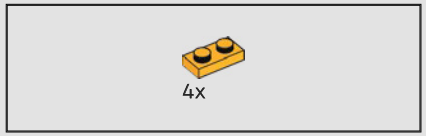

482

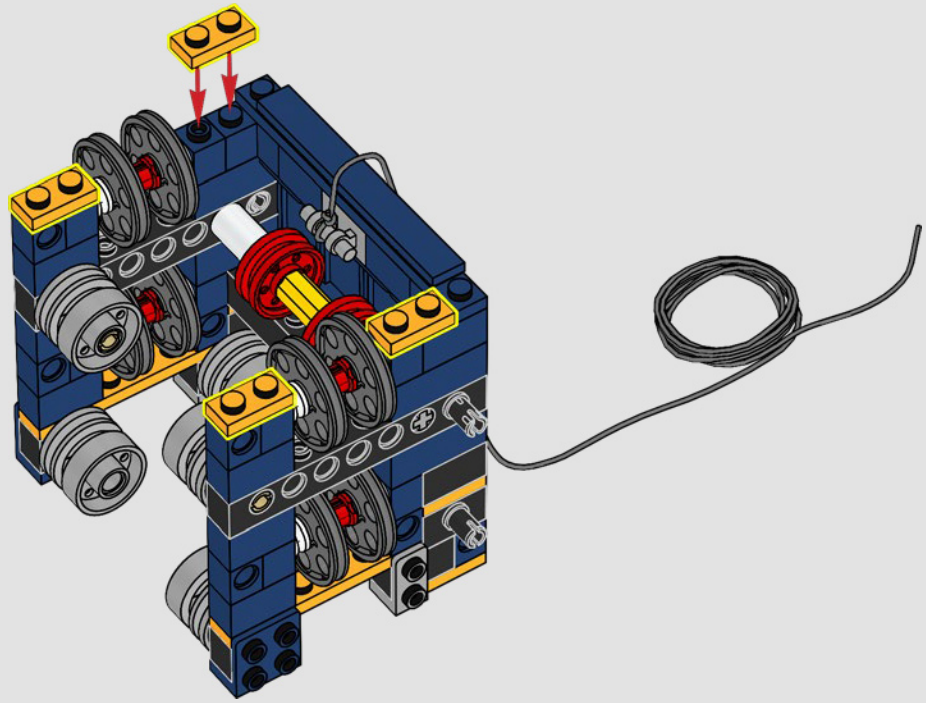

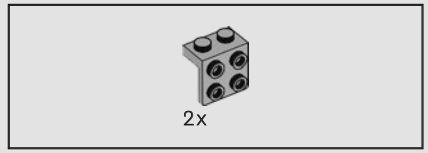

483

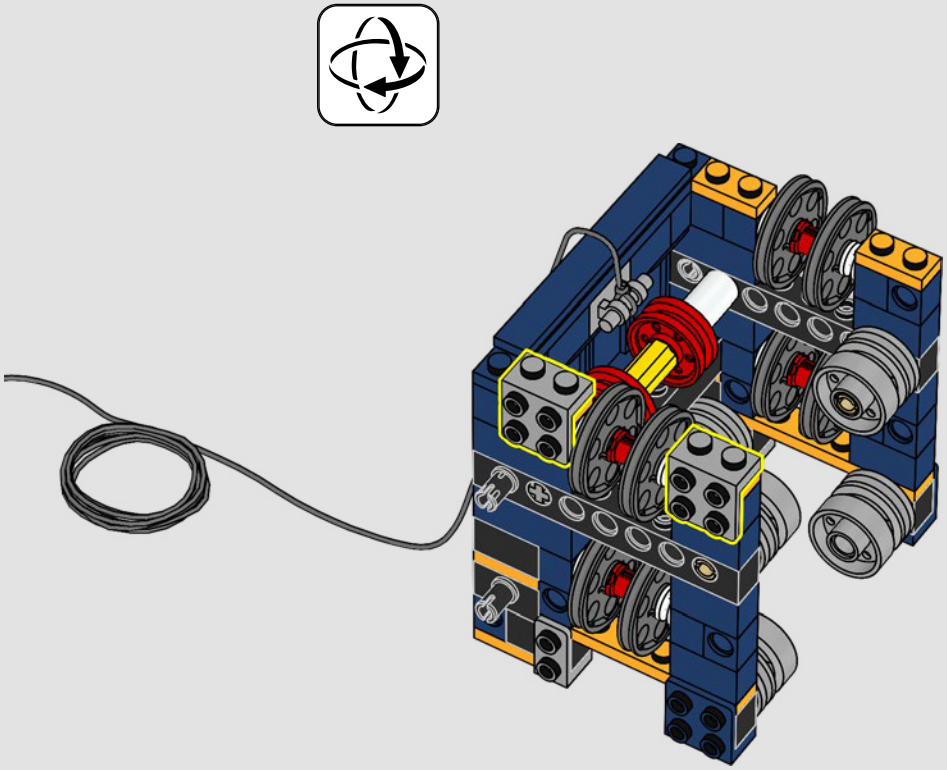

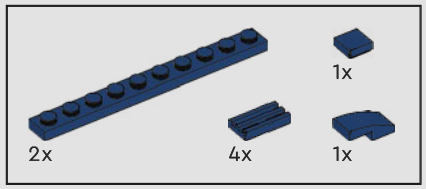

484

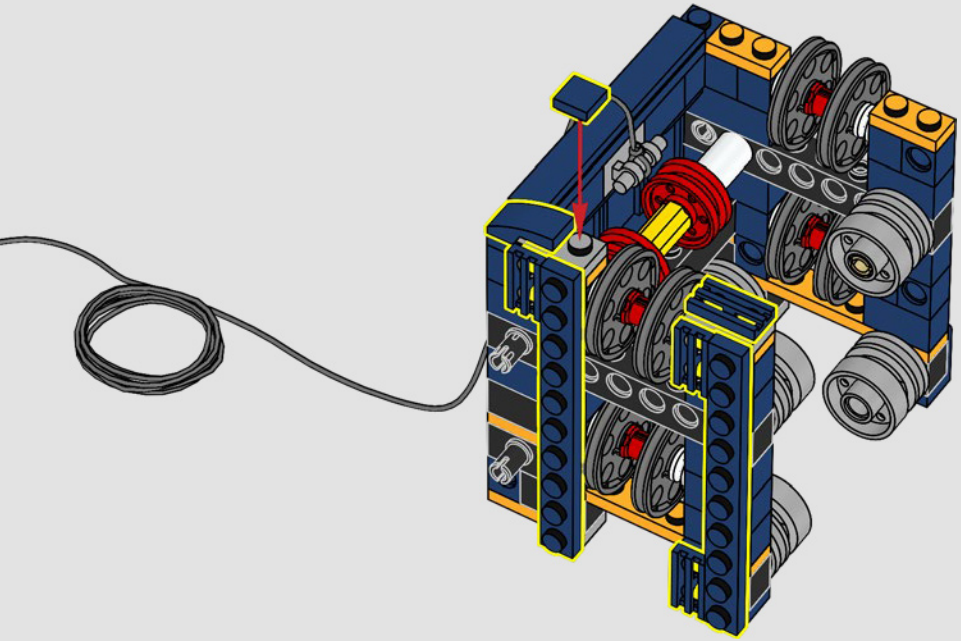

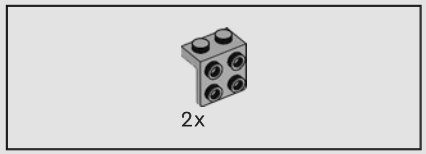

485

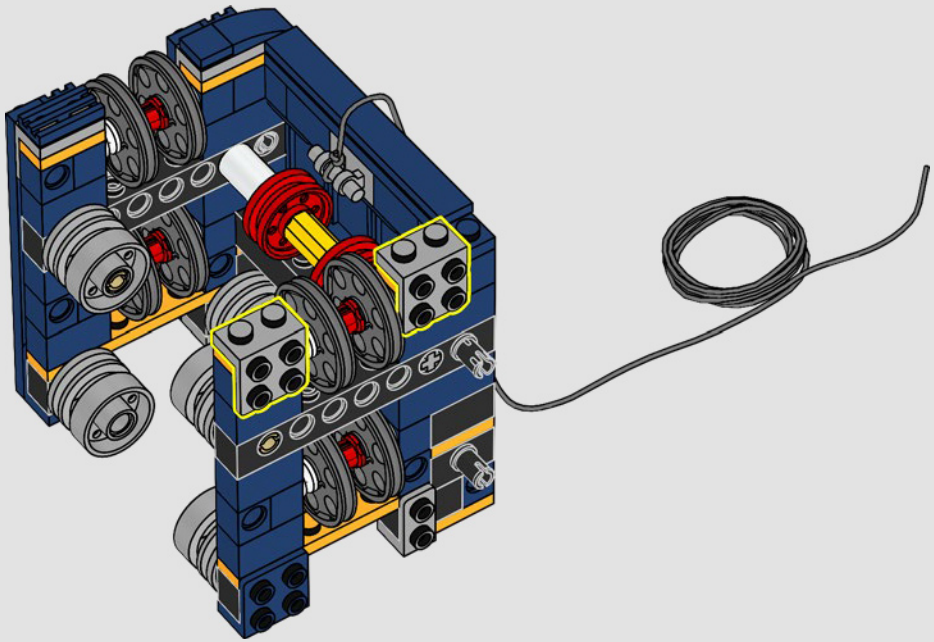

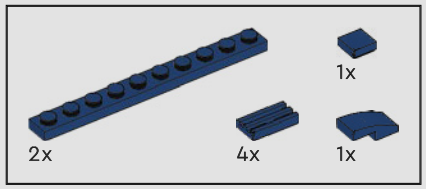

486

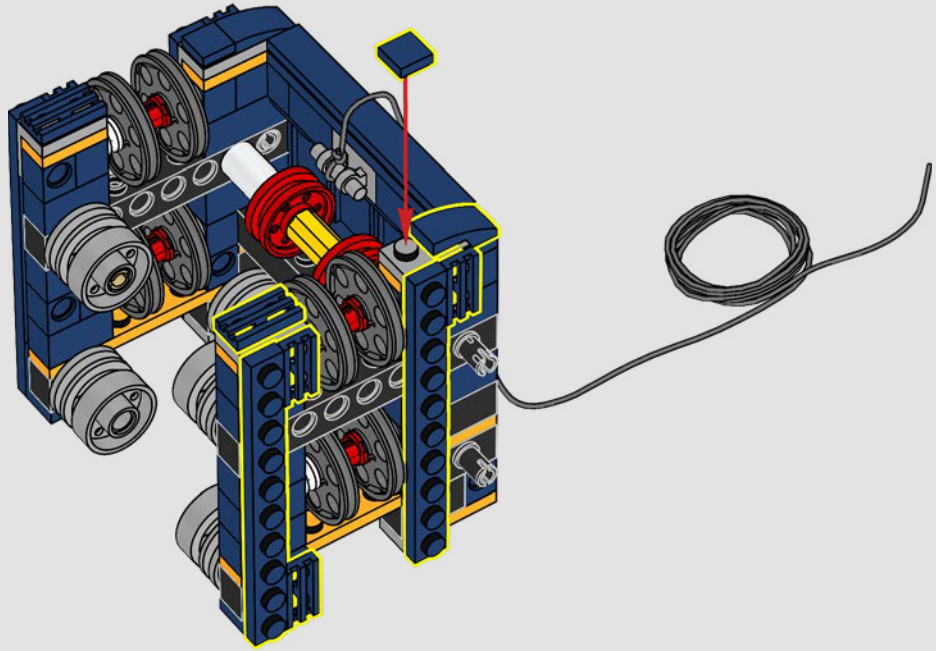

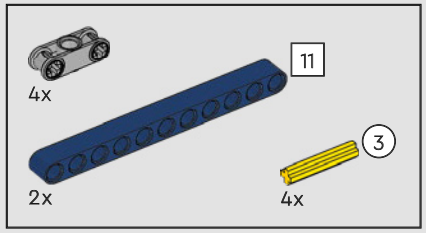

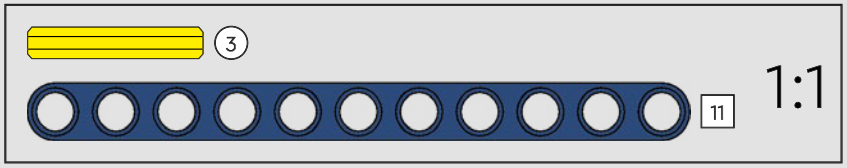

487

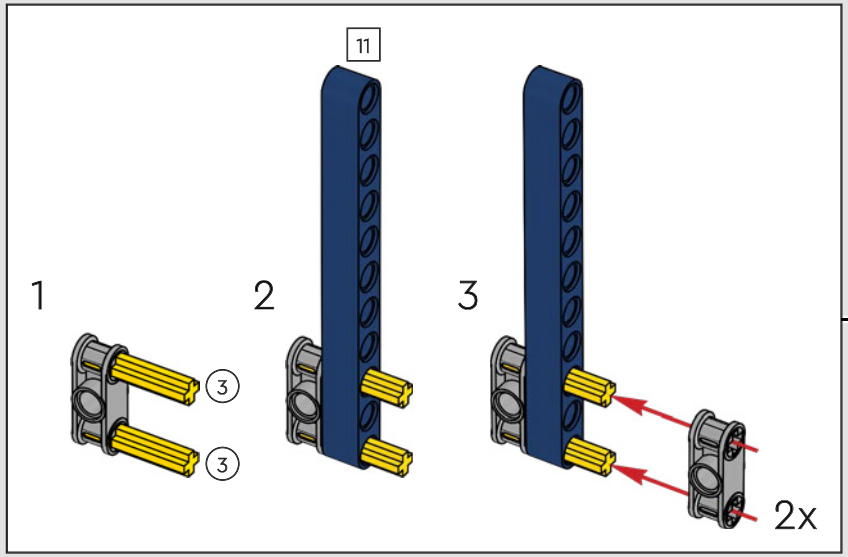

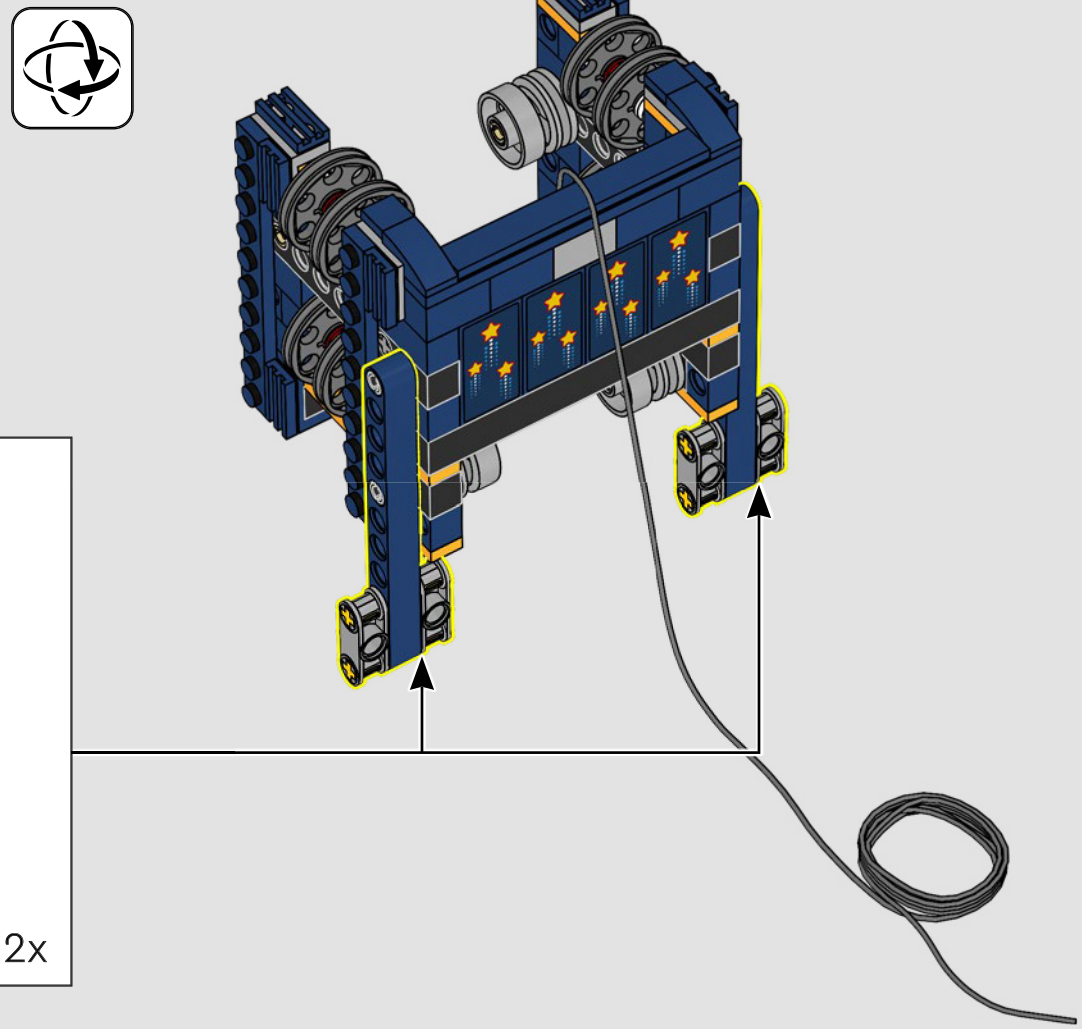

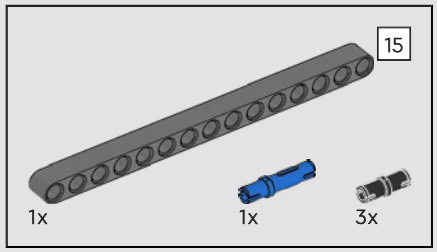

488

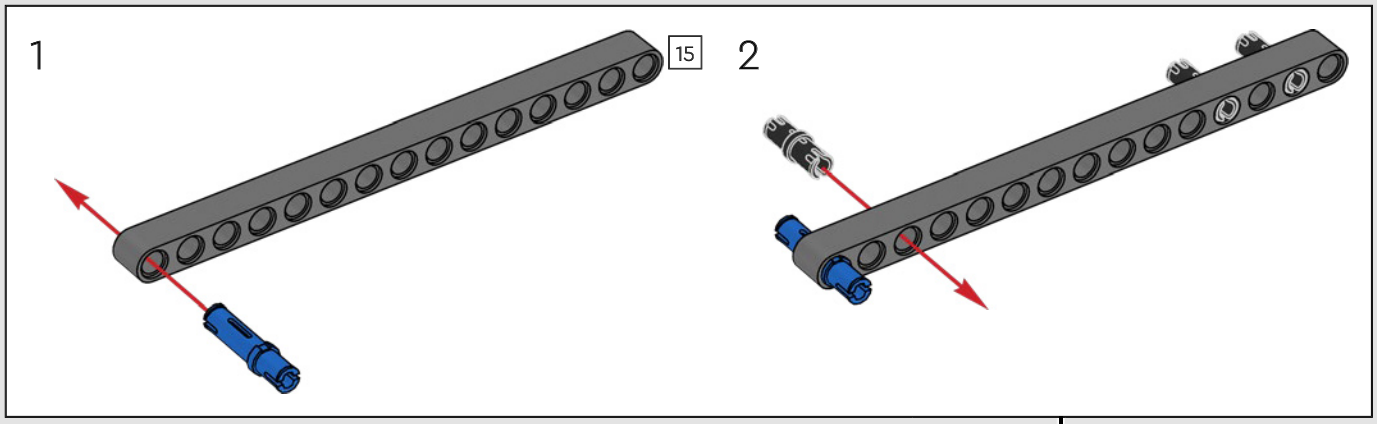

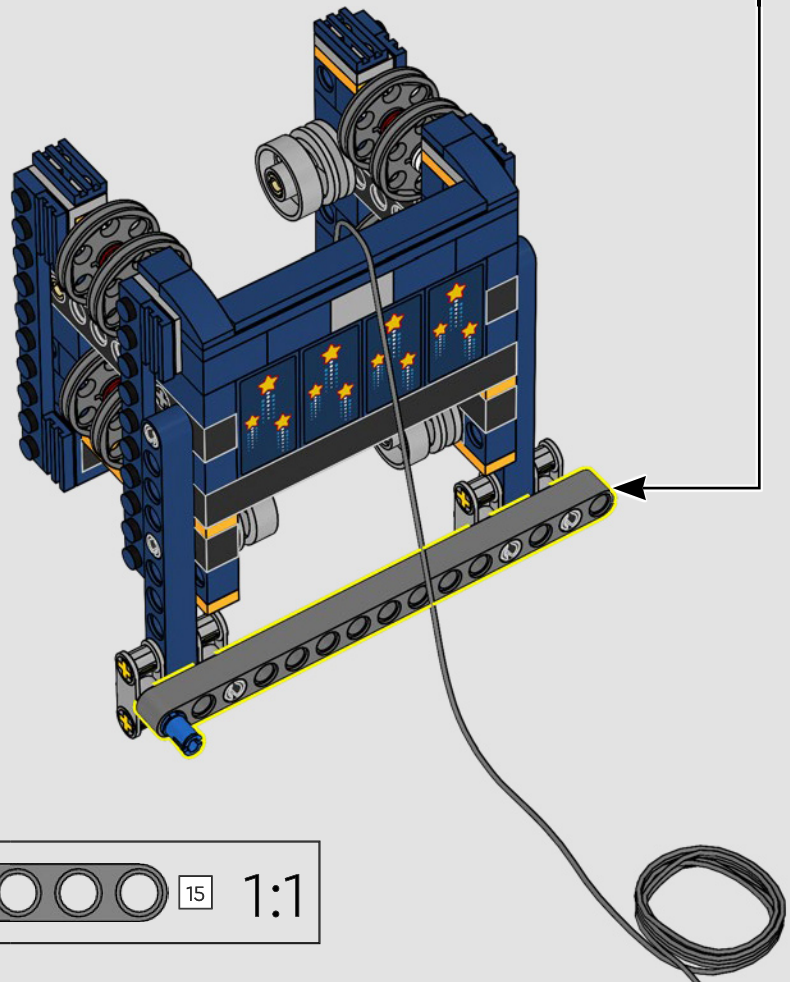

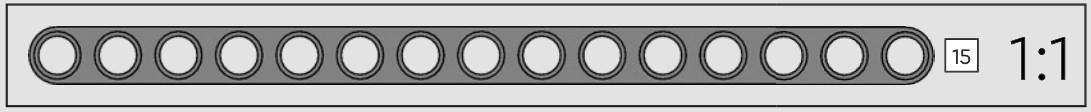

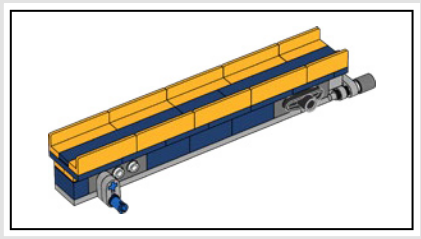

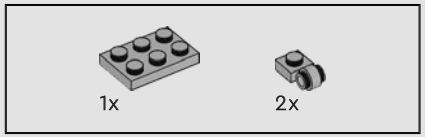

489

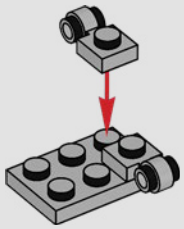

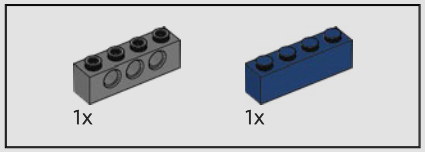

490

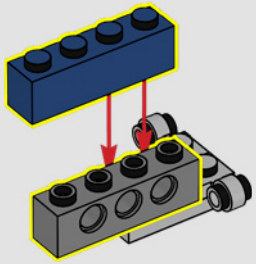

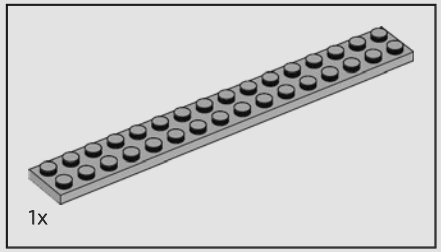

491

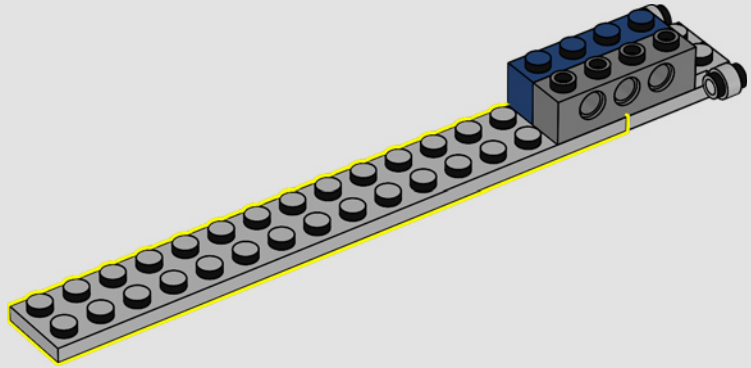

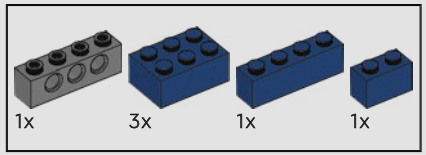

492

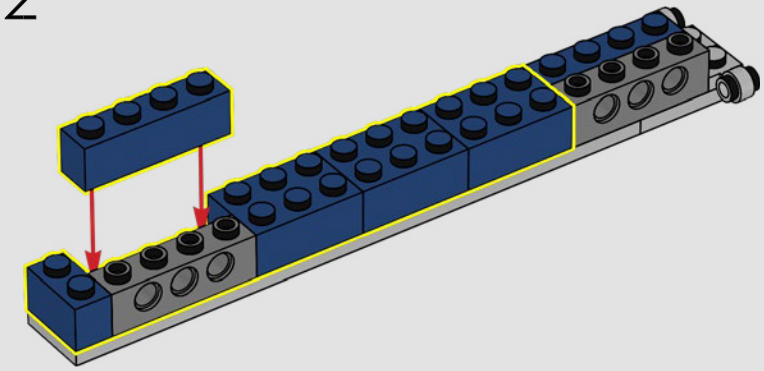

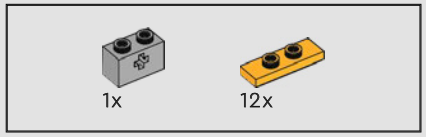

493

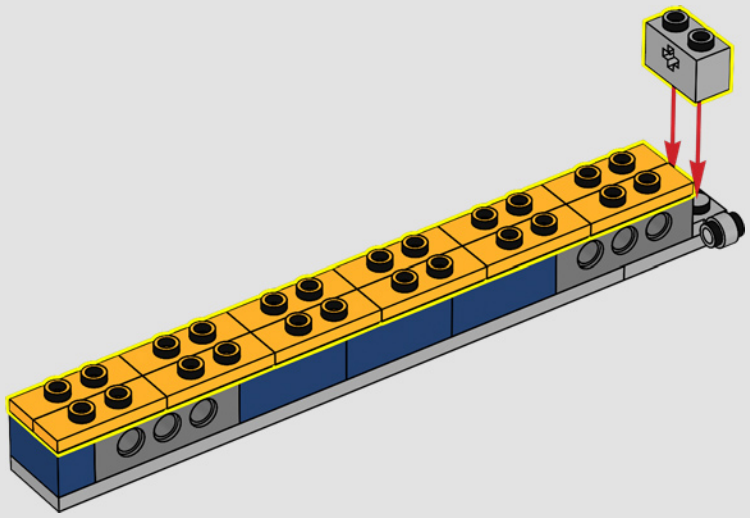

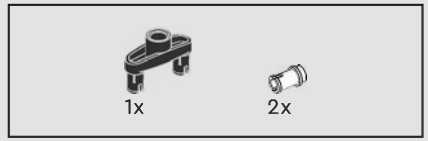

494

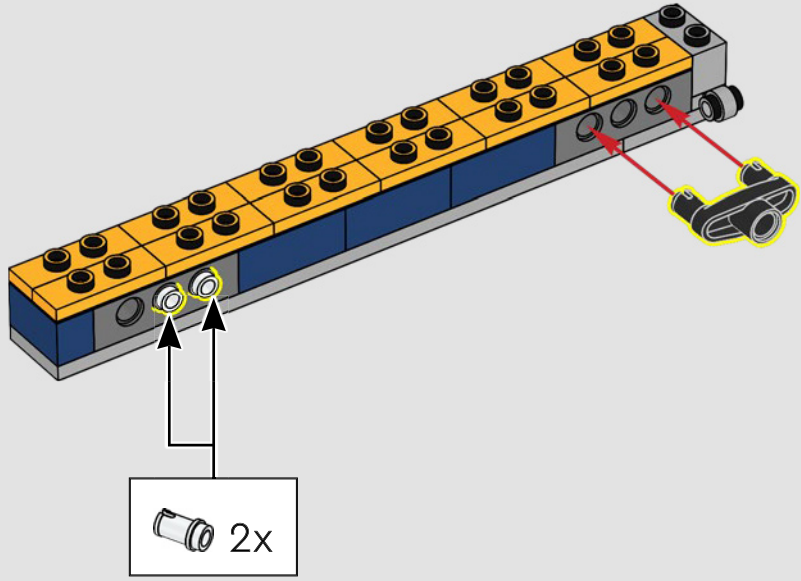

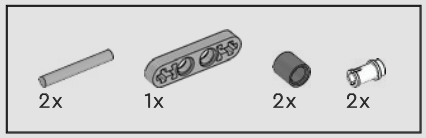

495

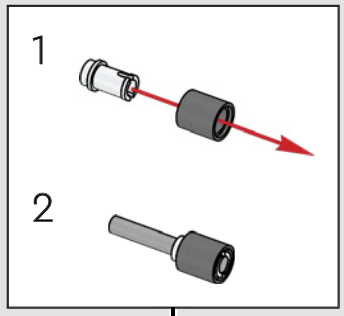

496

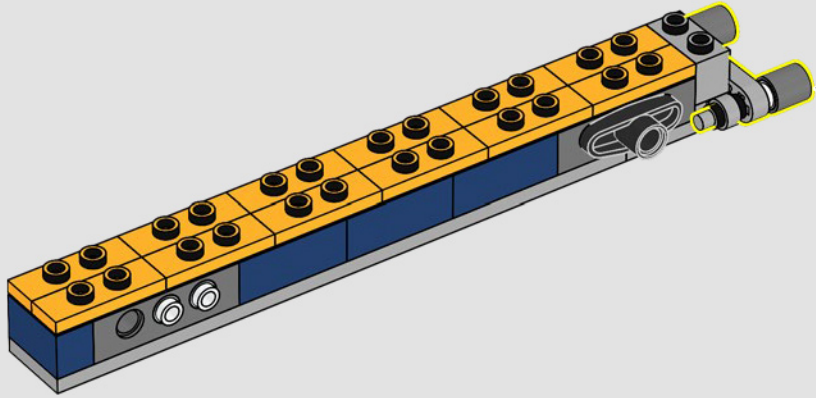

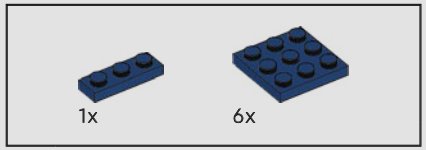

497

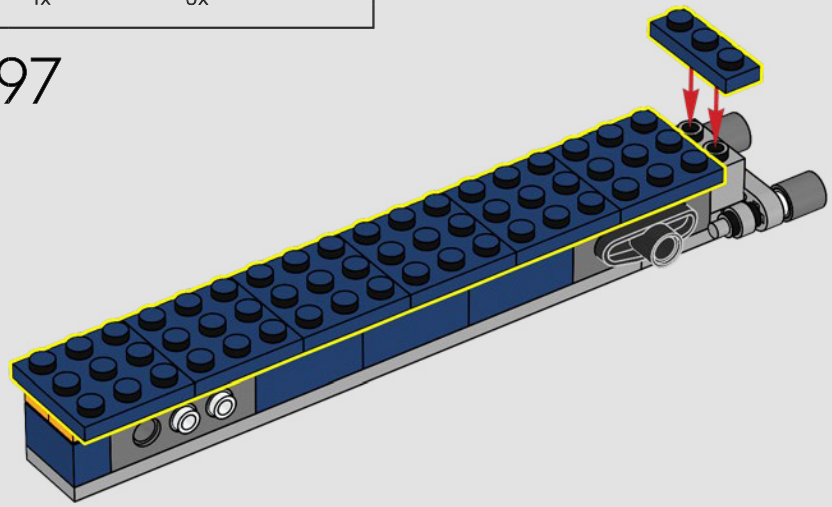

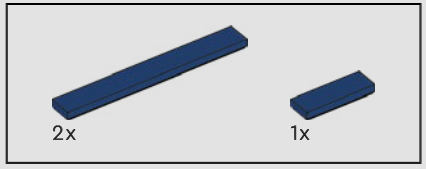

498

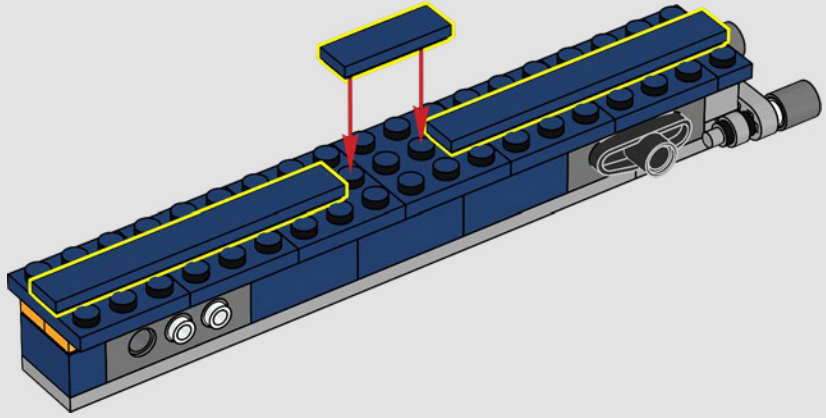

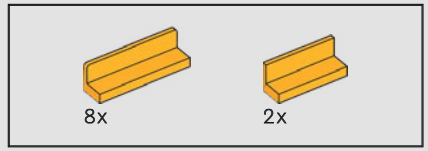

499

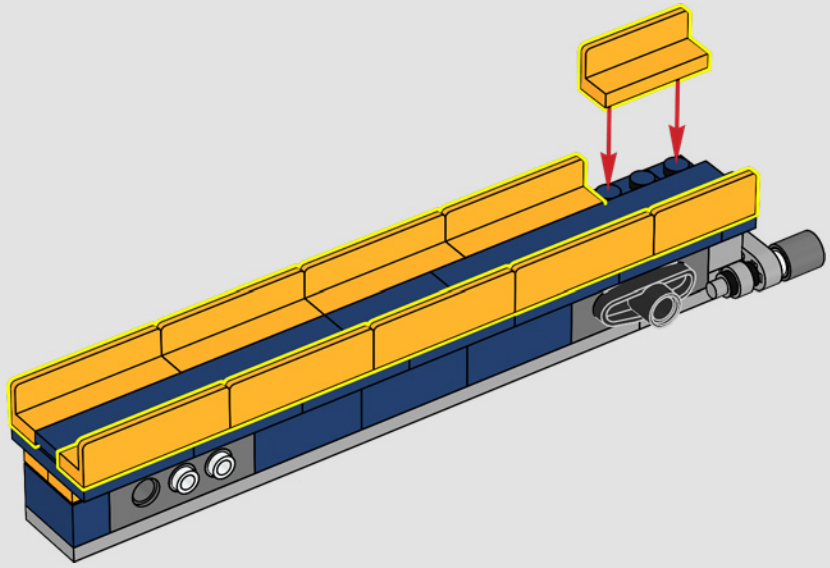

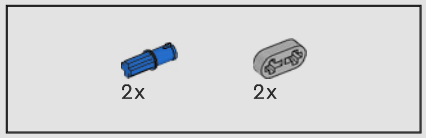

500

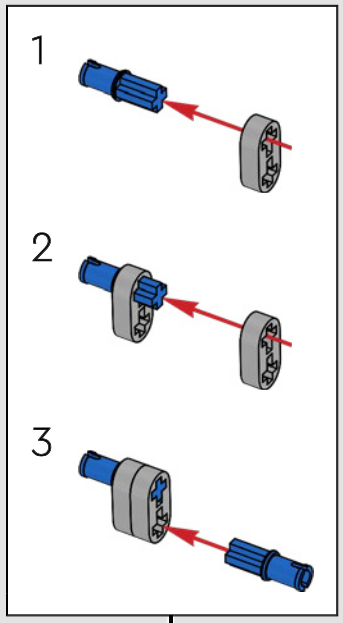

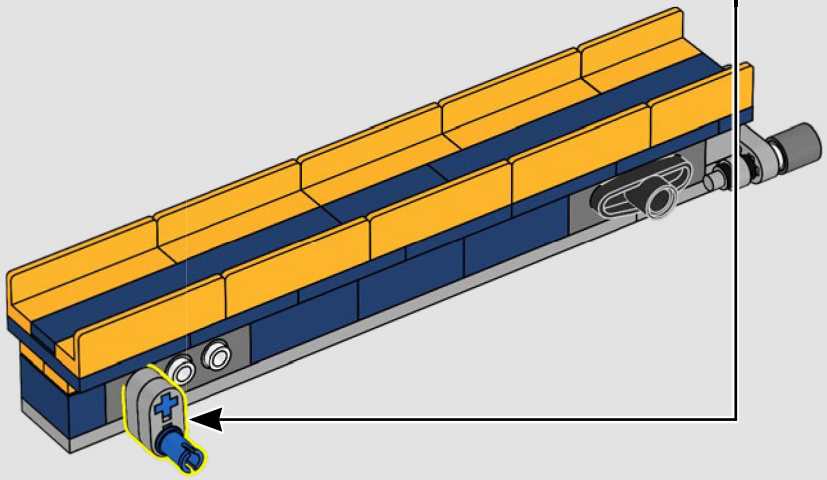

501

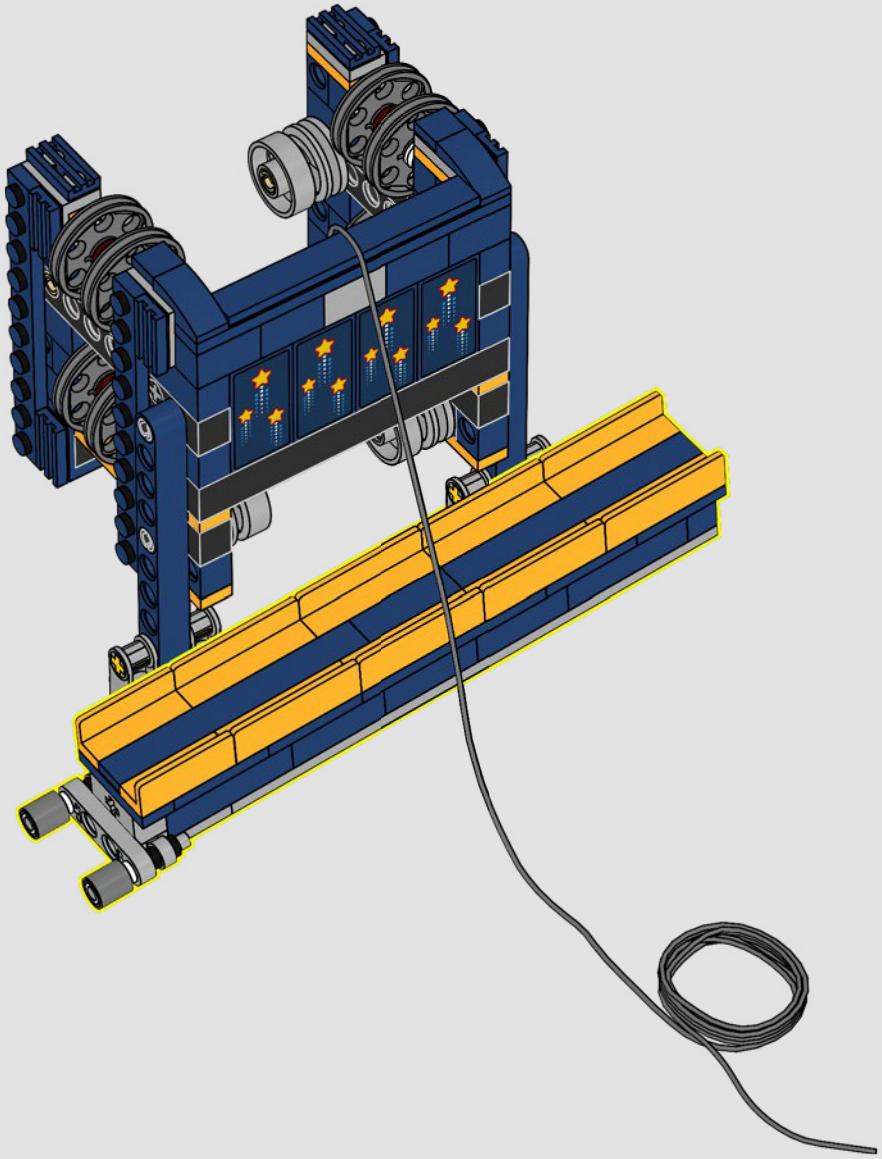

502

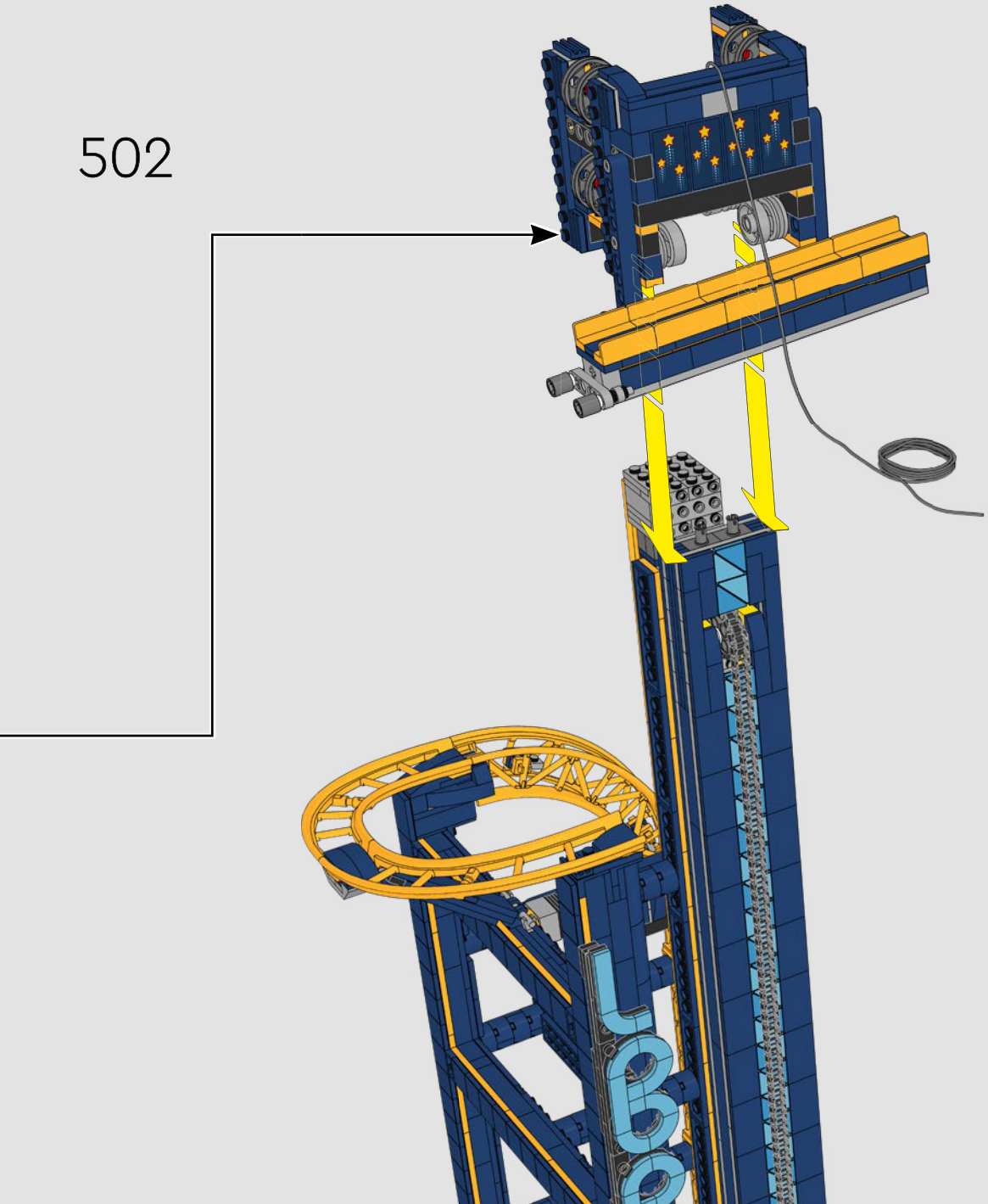

503

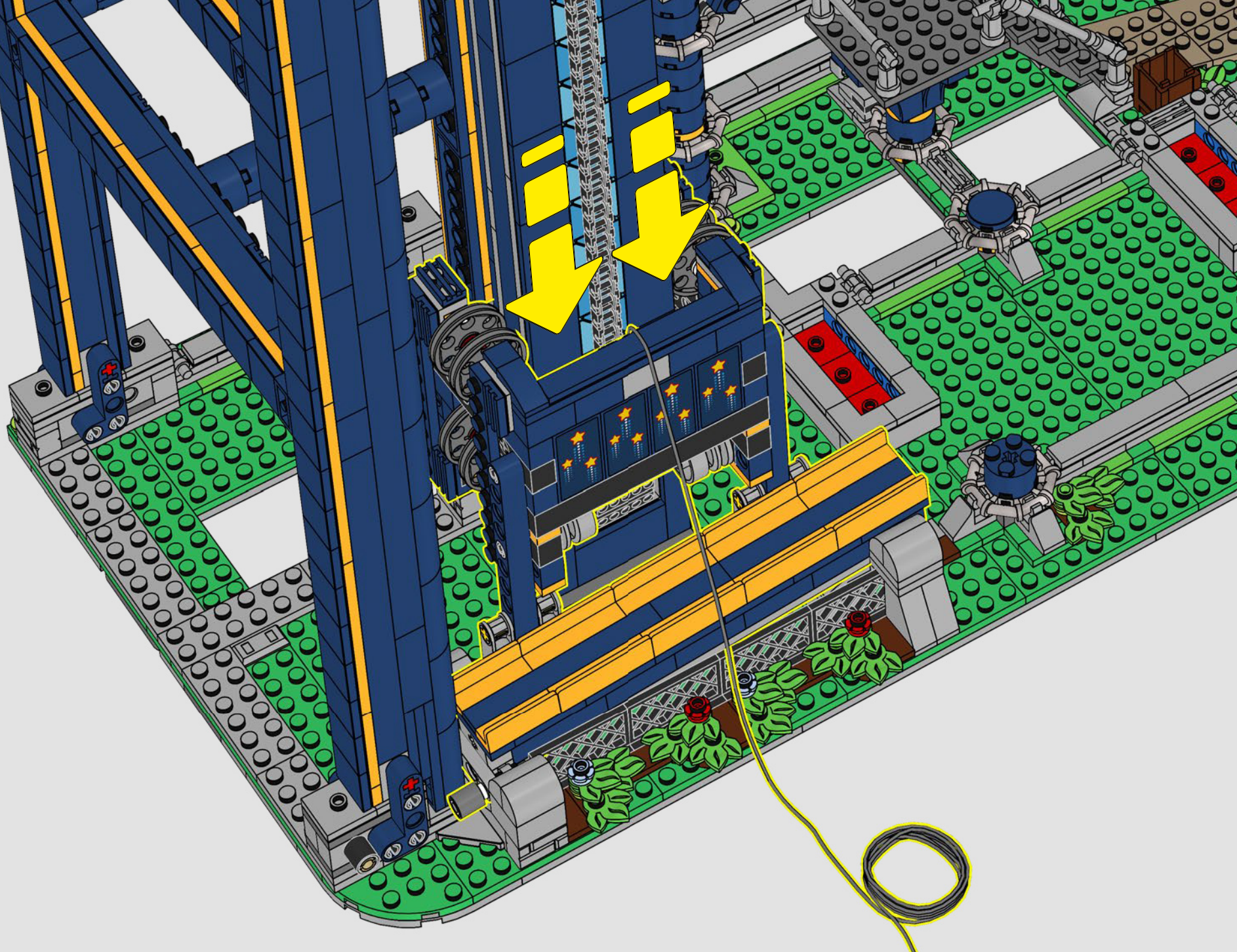

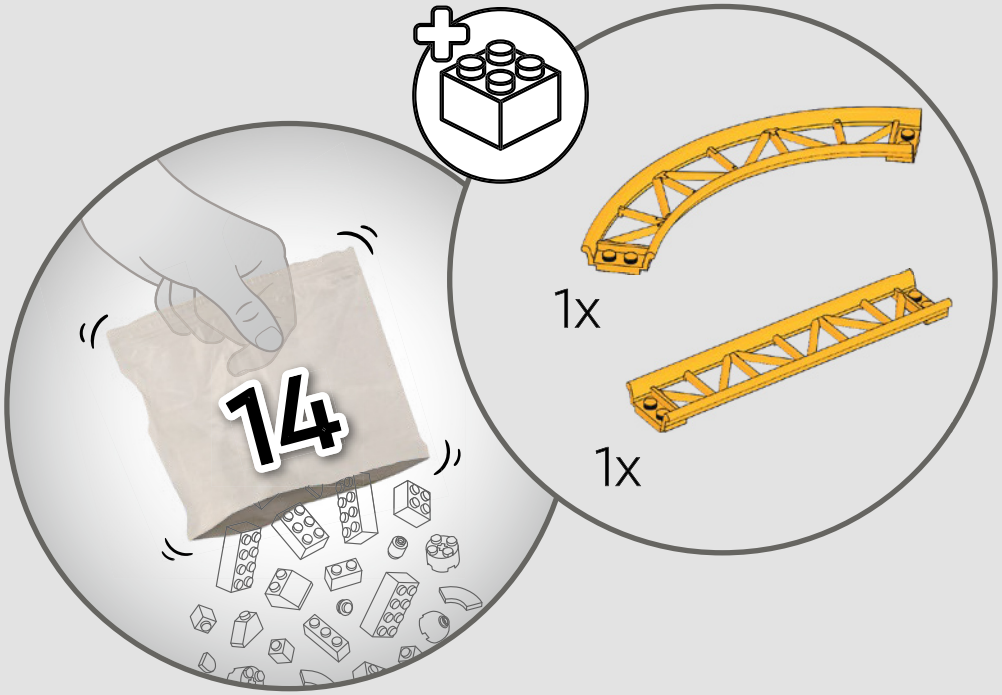

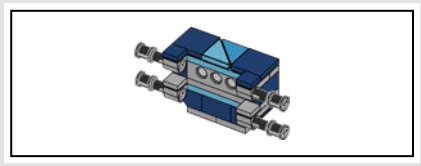

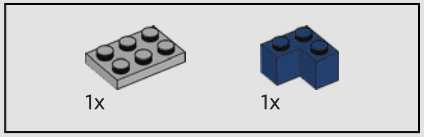

504

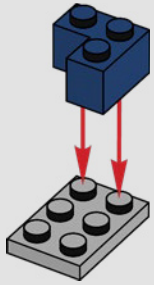

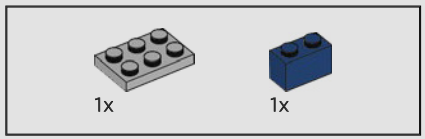

505

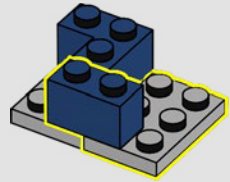

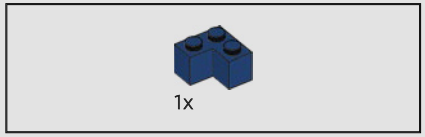

506

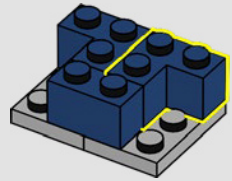

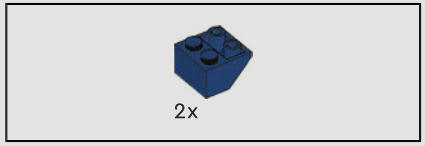

507

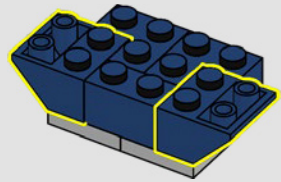

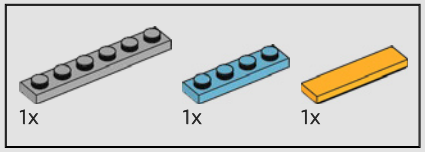

508

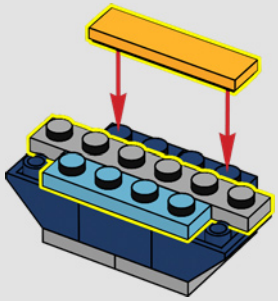

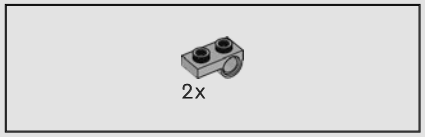

509

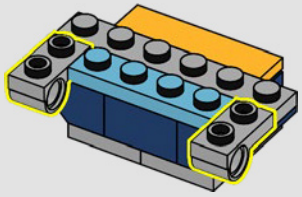

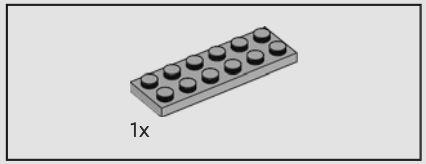

510

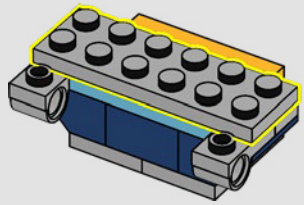

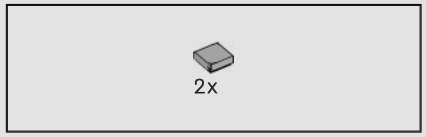

511

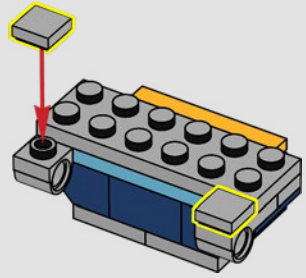

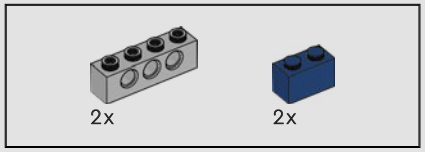

512

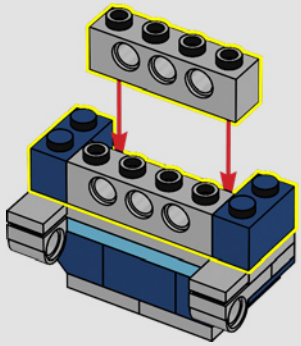

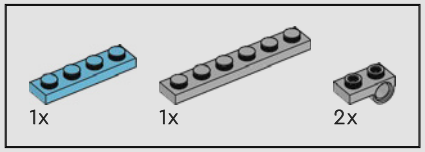

513

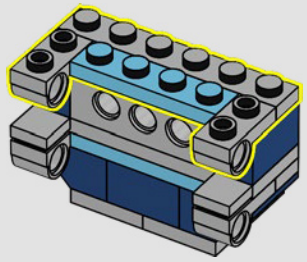

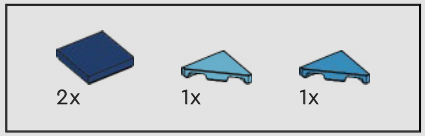

514

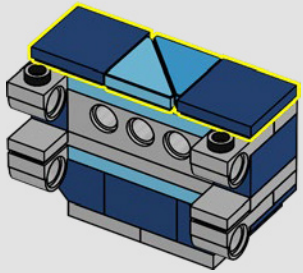

515

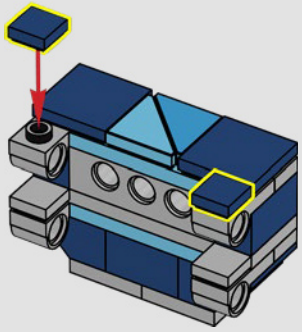

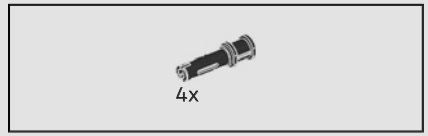

516

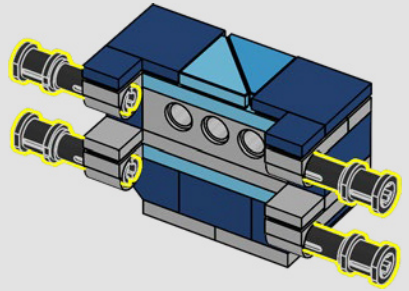

517

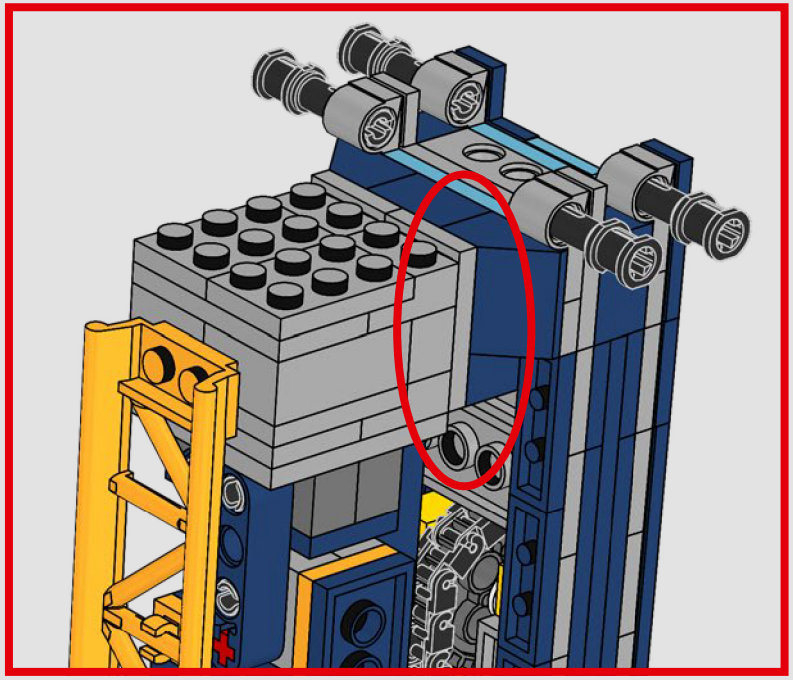

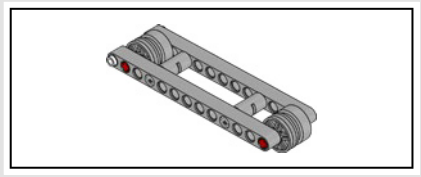

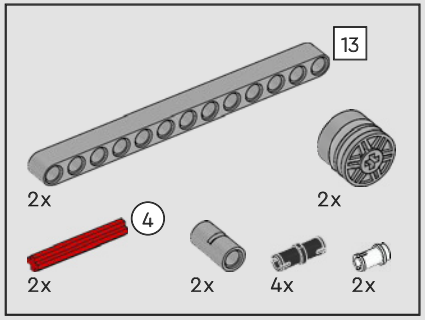

518

1

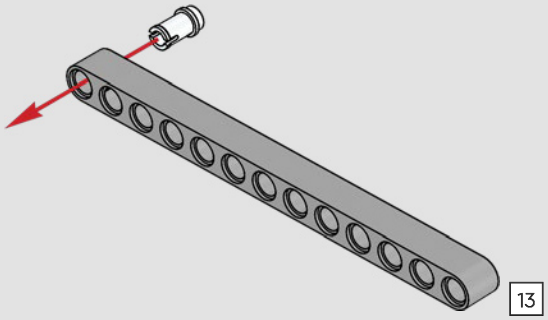

2

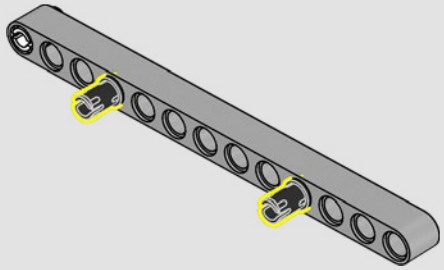

3

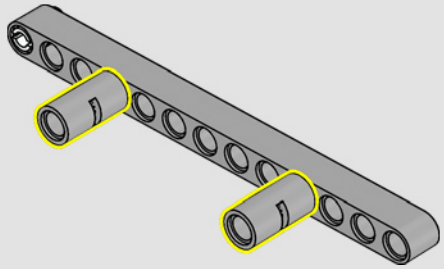

4

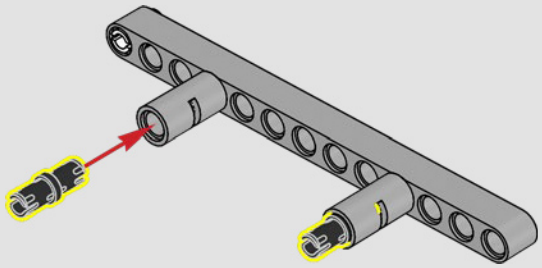

5

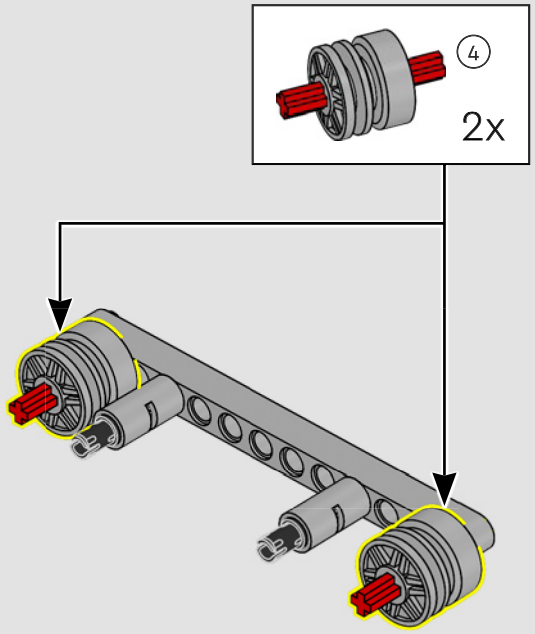

6

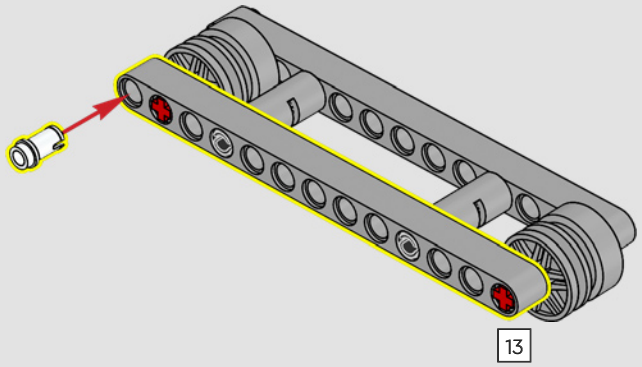

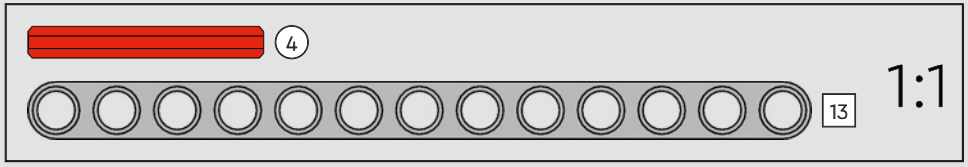

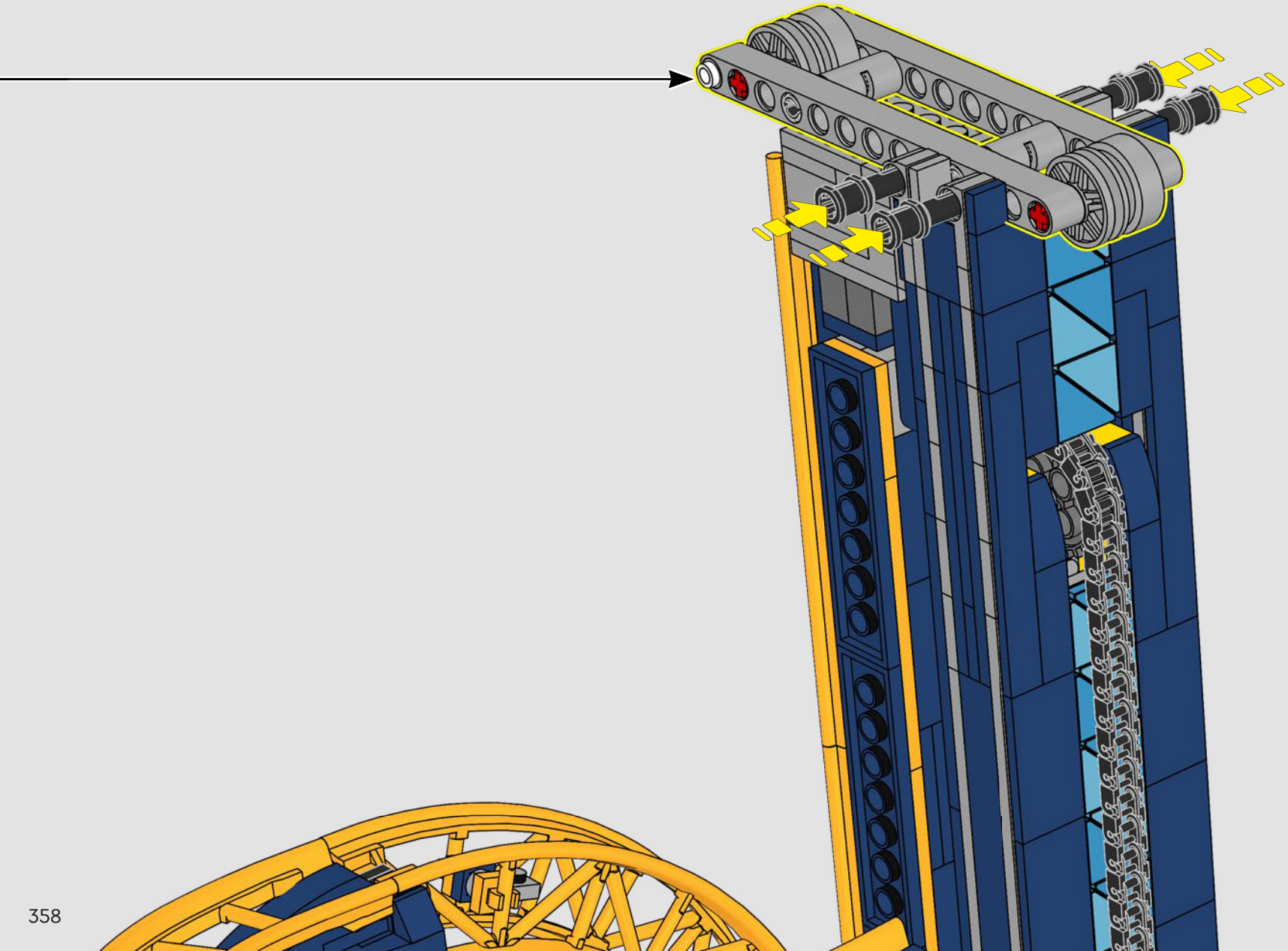

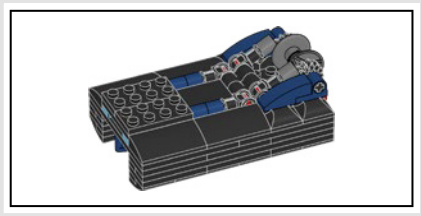

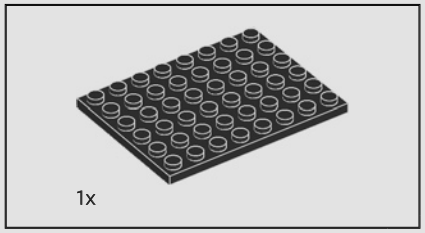

519

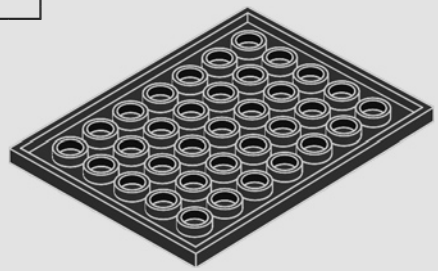

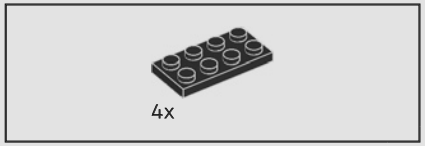

520

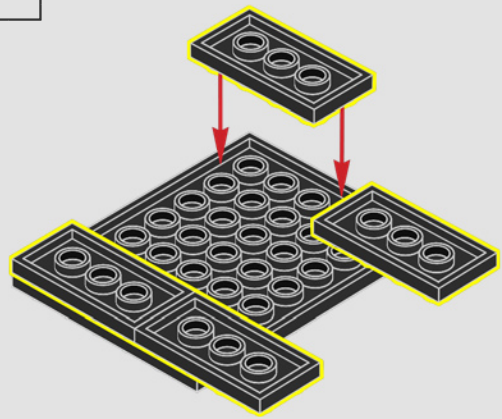

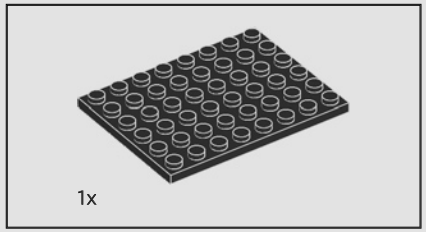

521

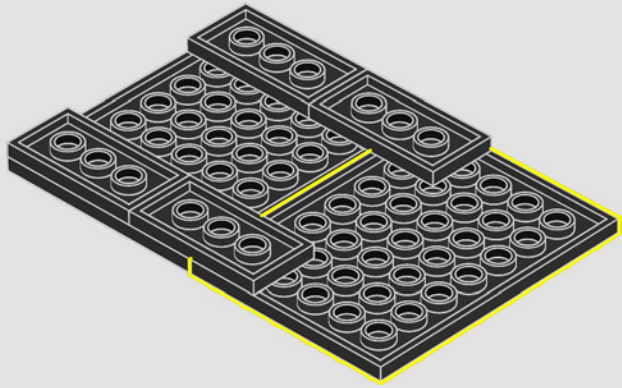

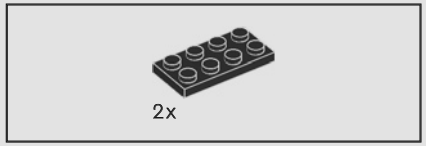

522

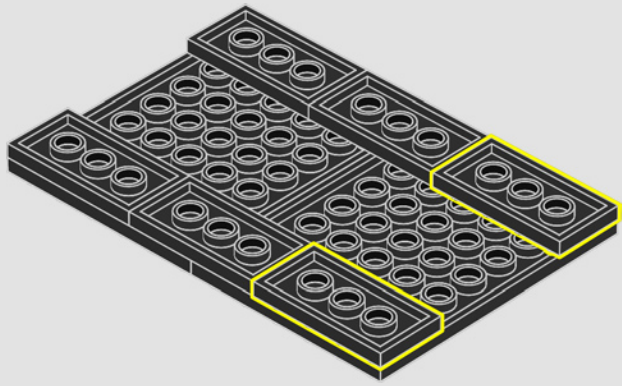

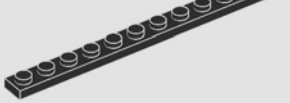

523

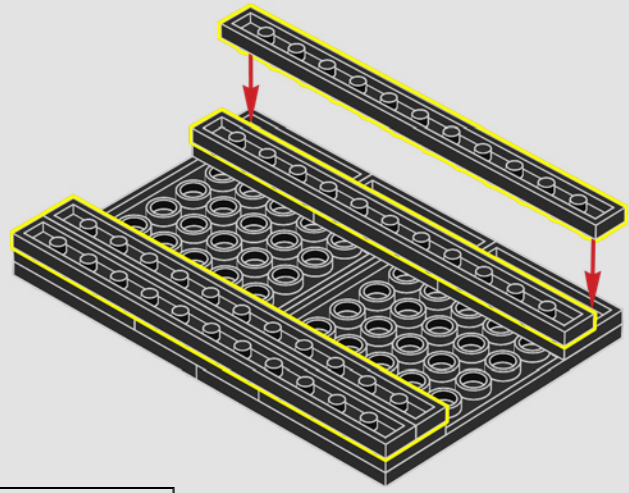

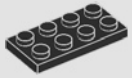

524

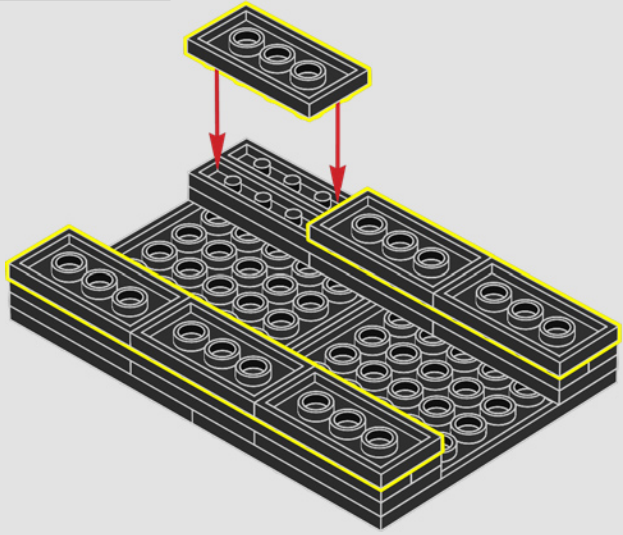

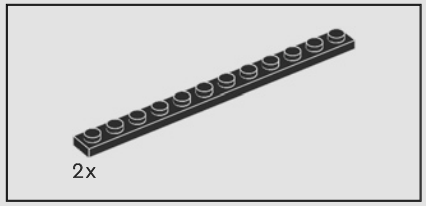

525

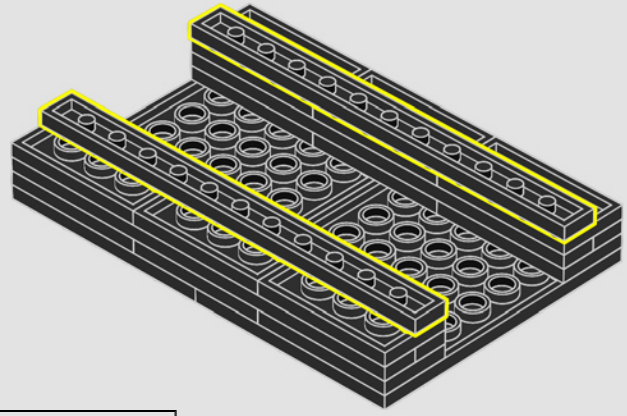

526

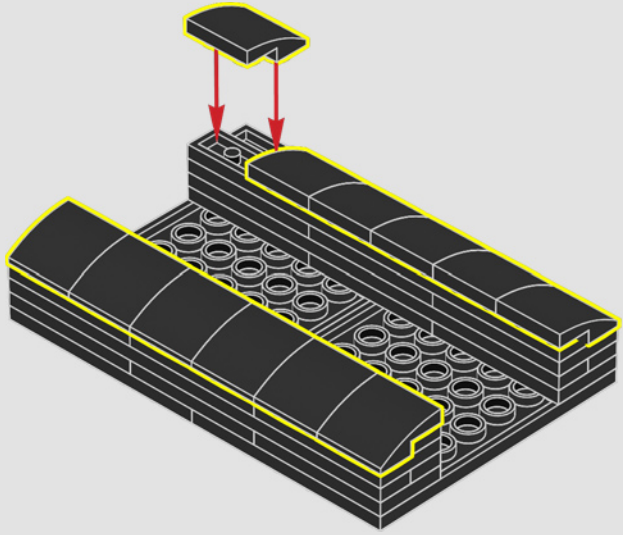

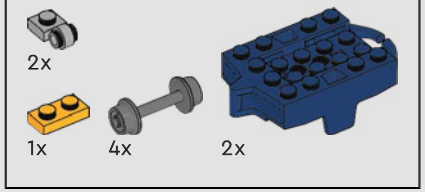

527

1

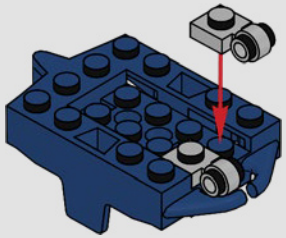

2

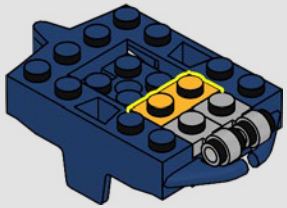

3

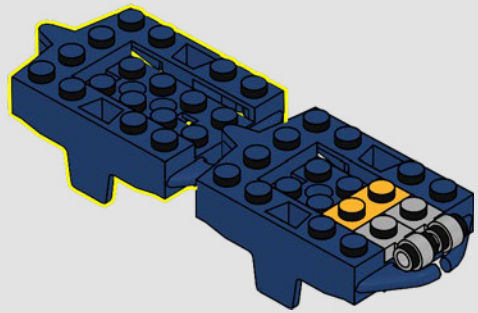

4

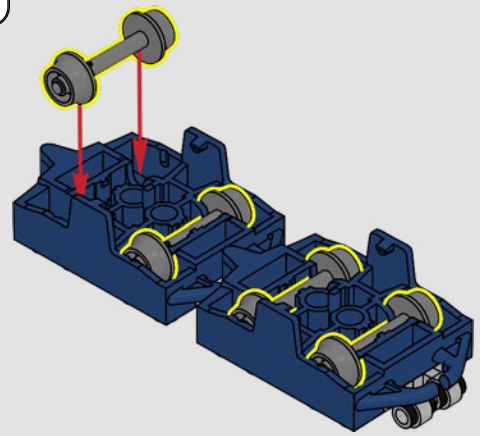

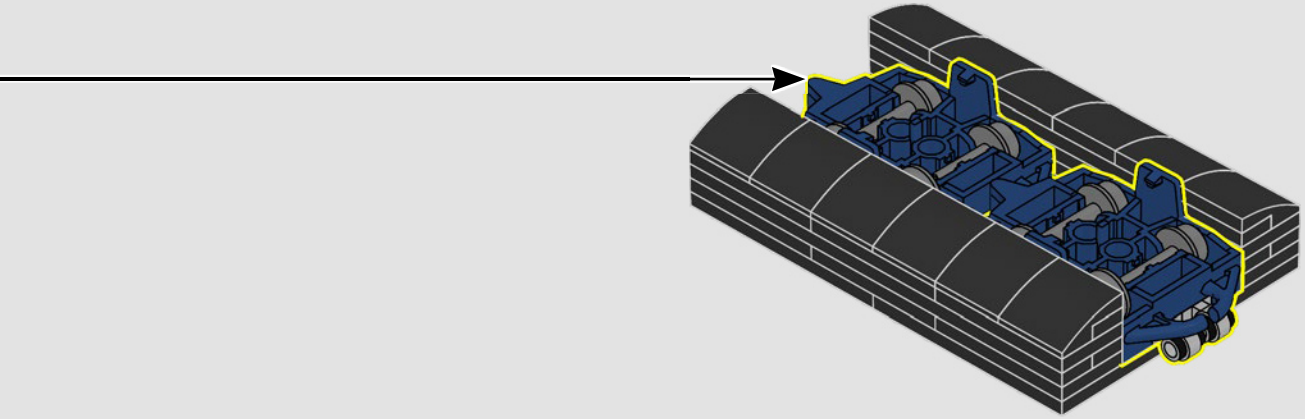

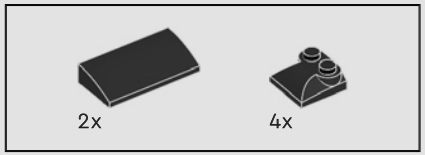

528

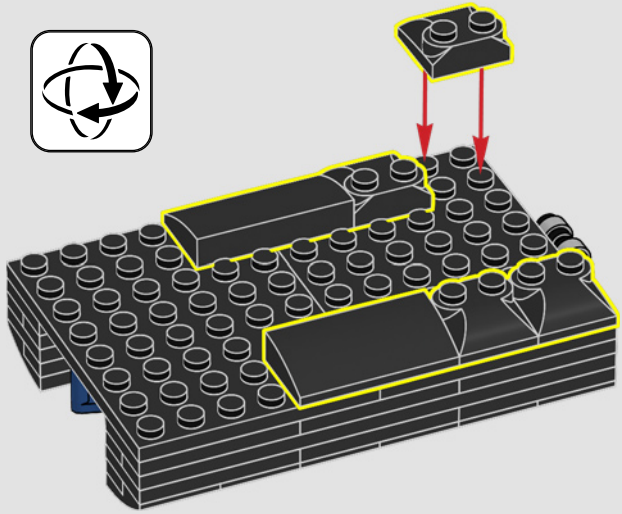

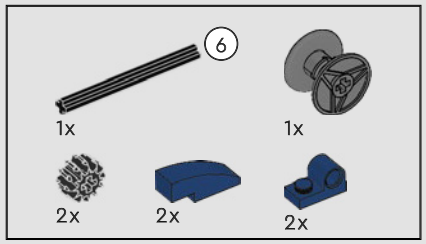

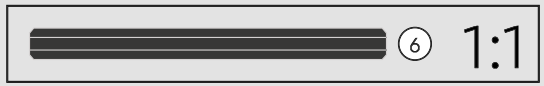

529

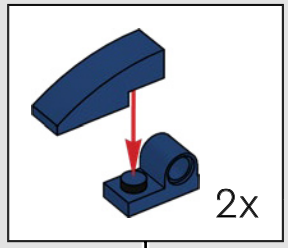

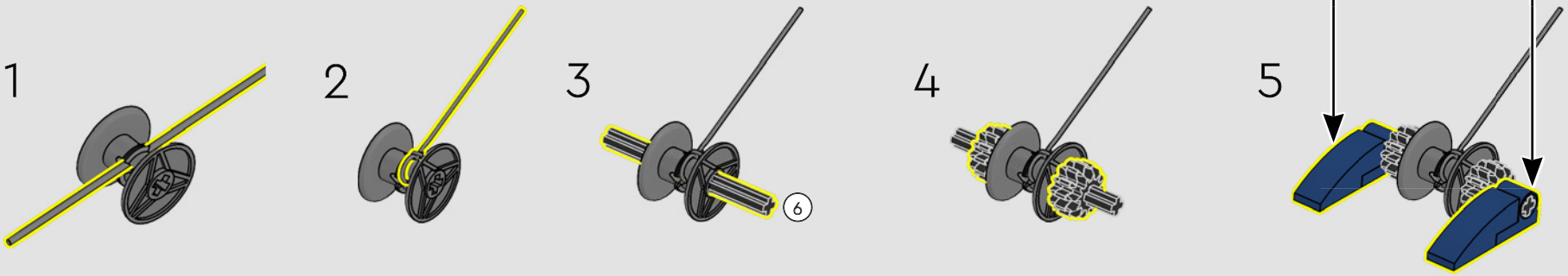

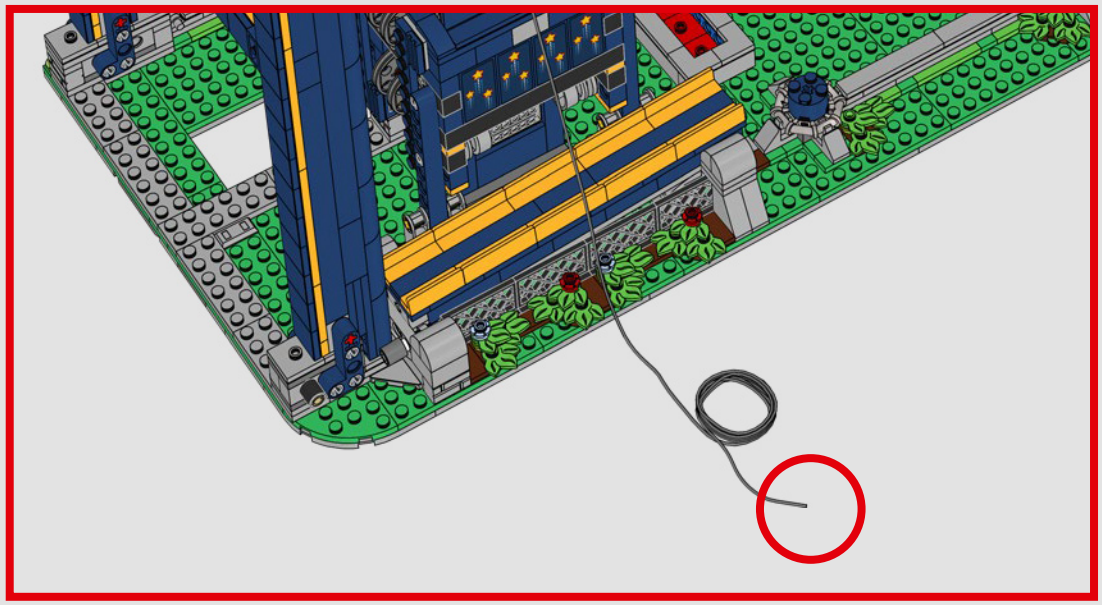

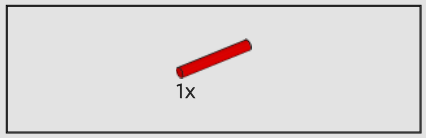

530

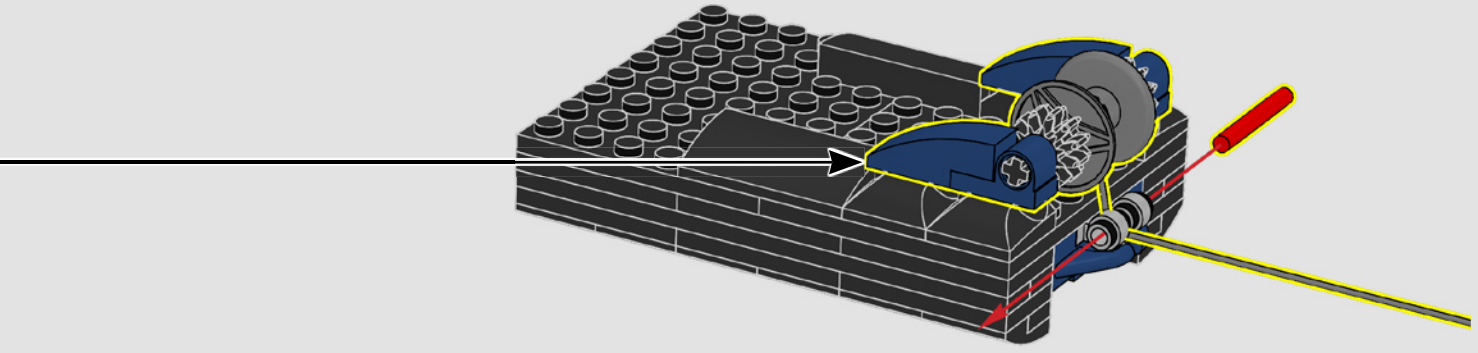

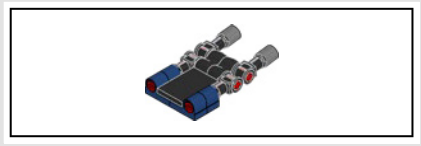

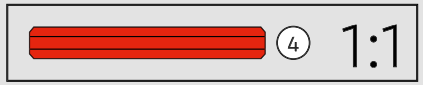

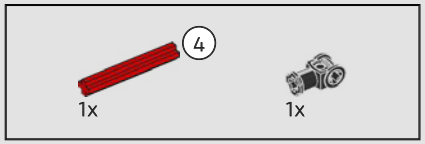

531

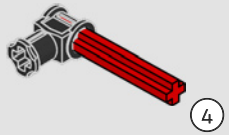

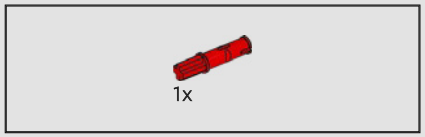

532

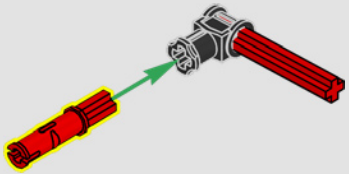

533

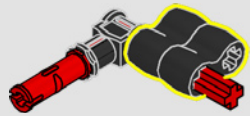

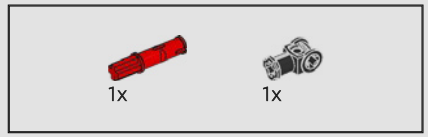

534

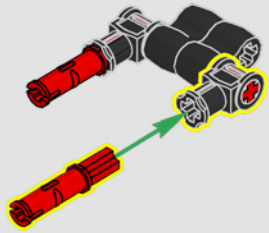

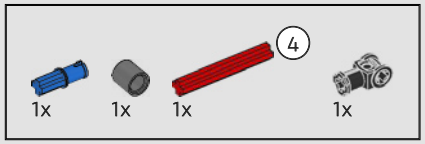

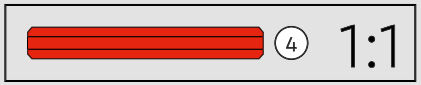

535

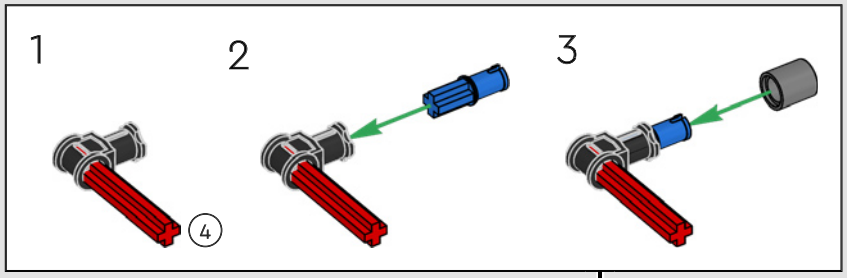

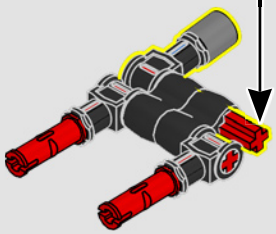

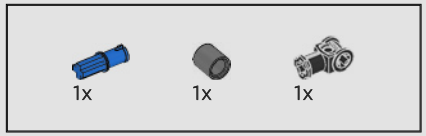

536

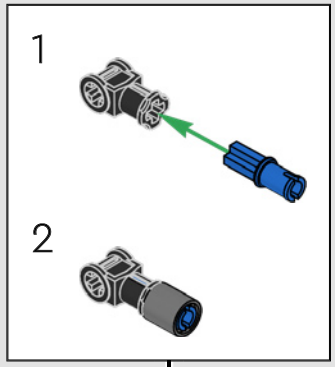

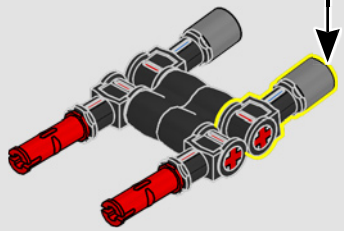

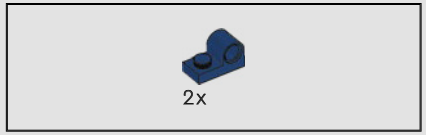

537

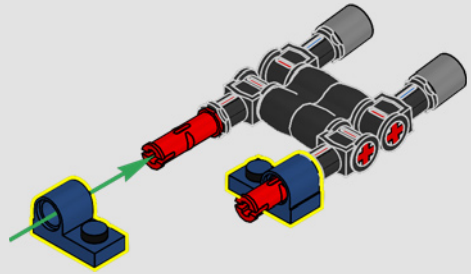

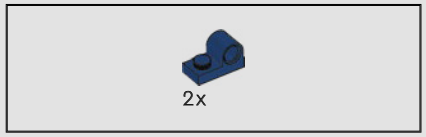

538

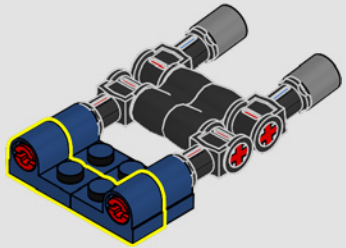

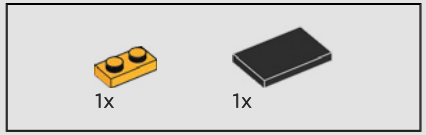

539

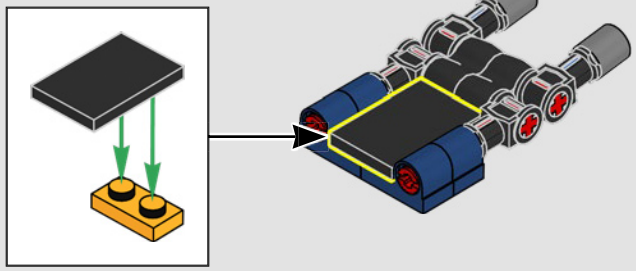

540

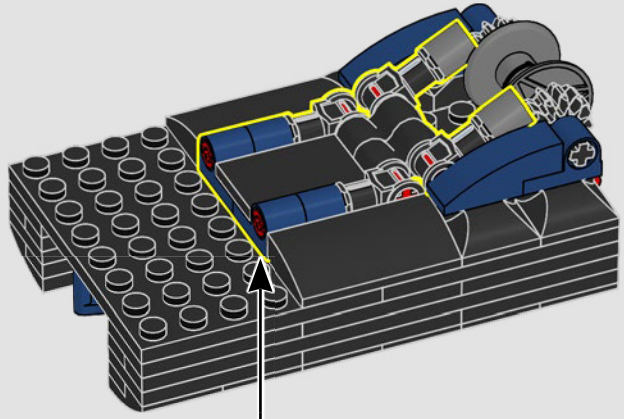

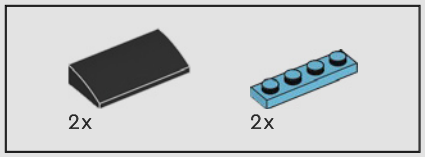

541

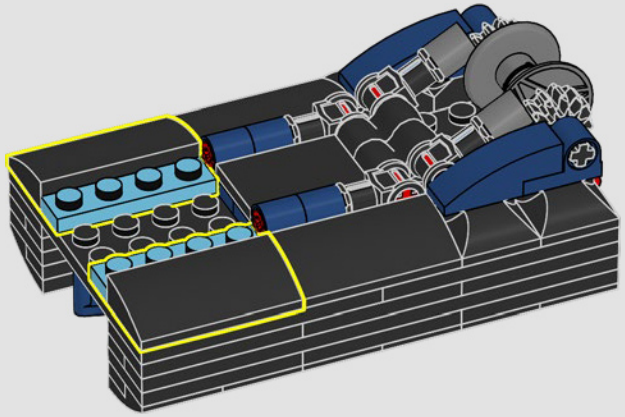

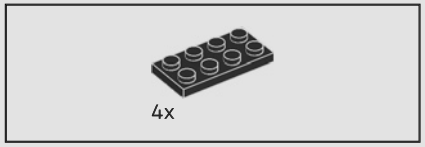

542

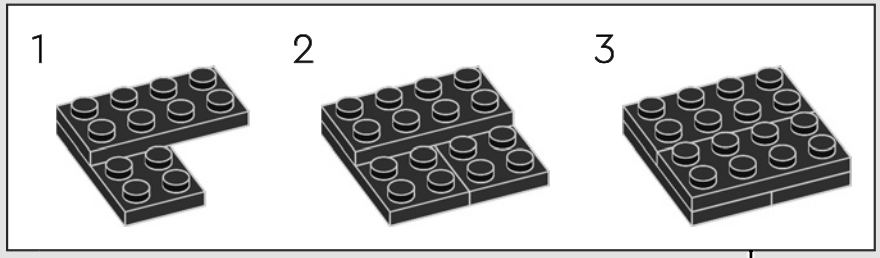

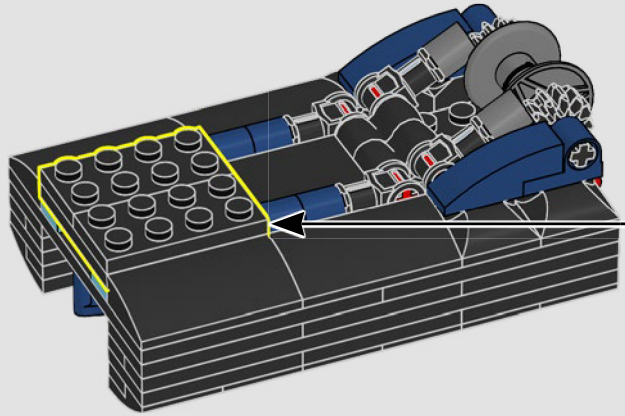

543

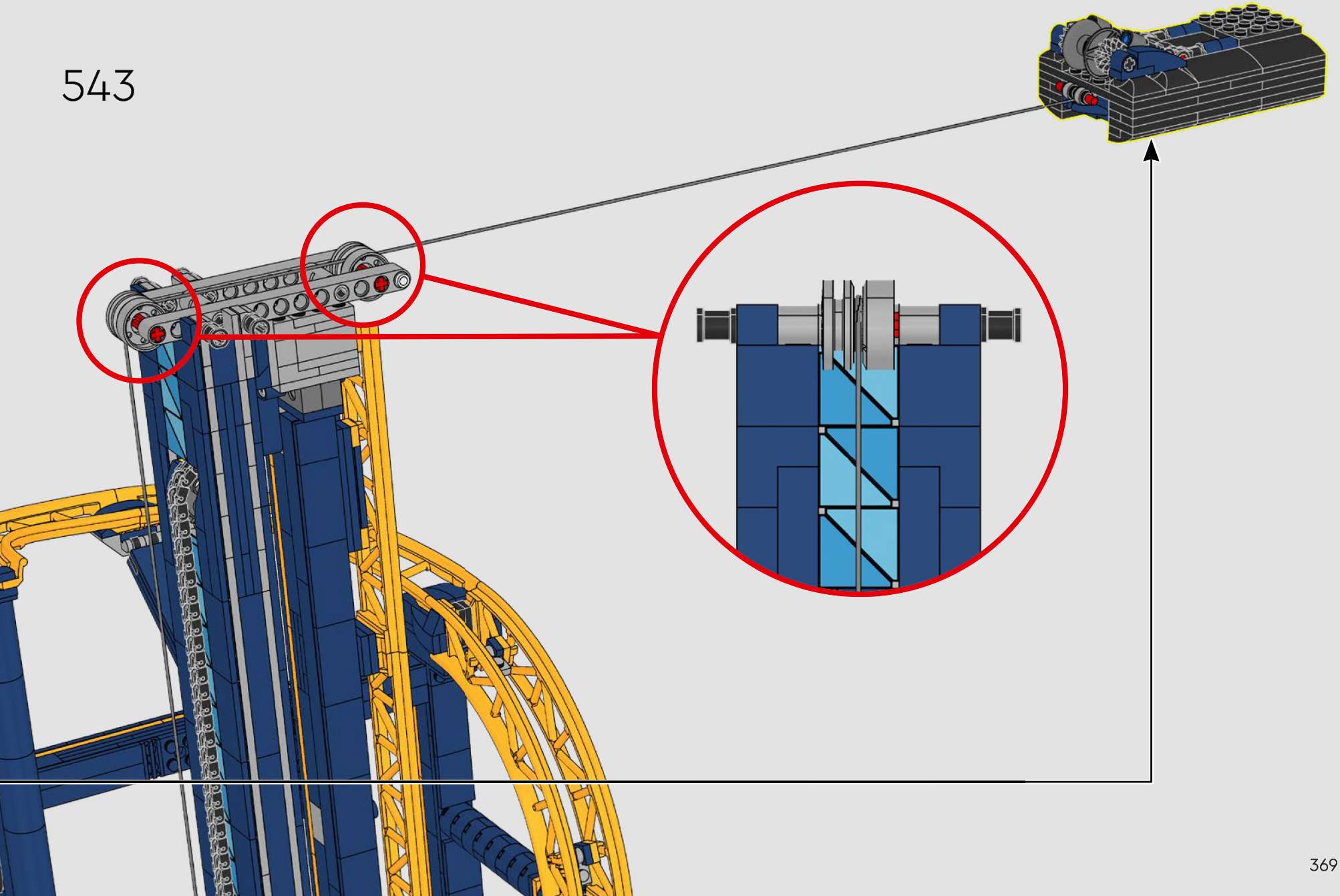

544

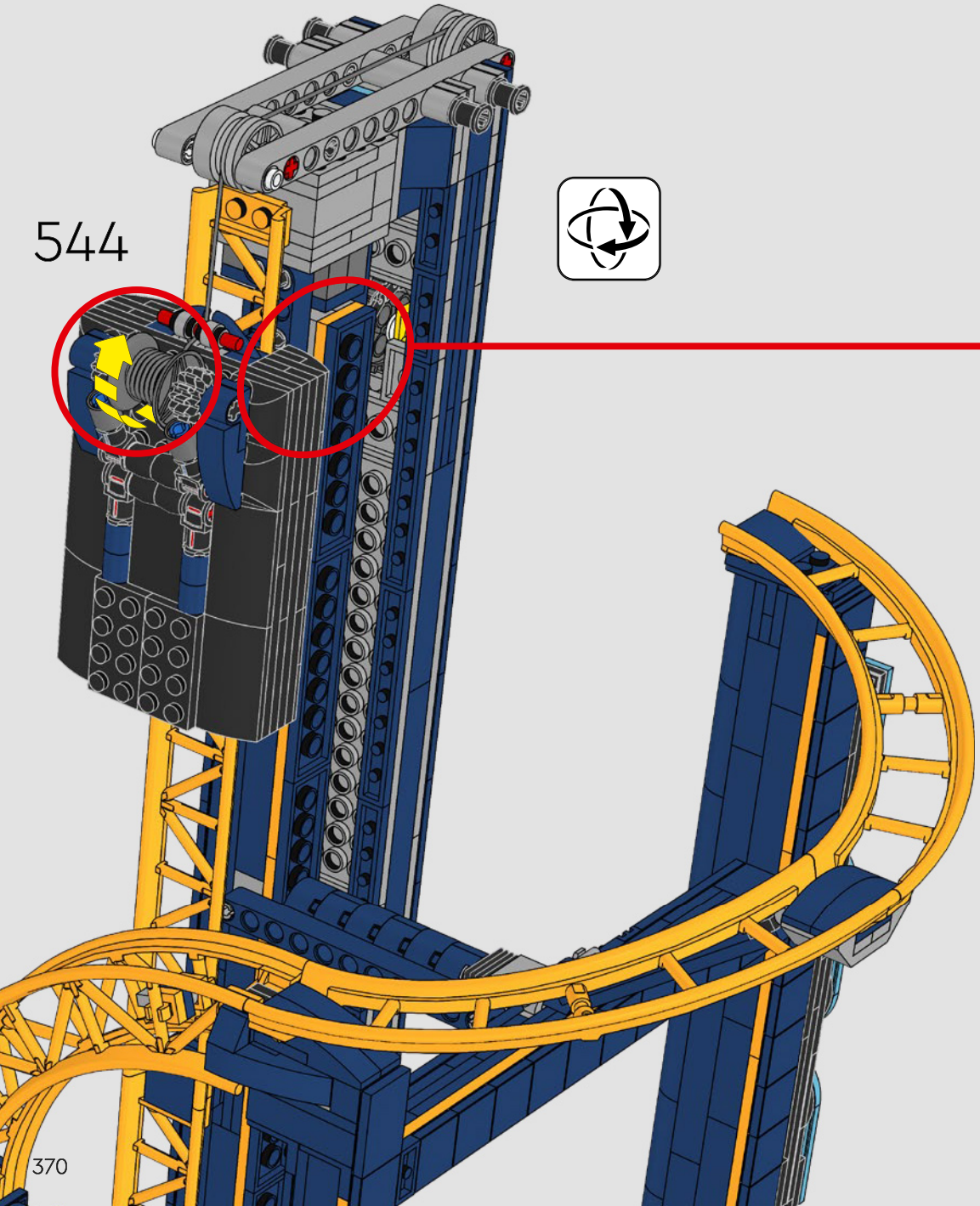

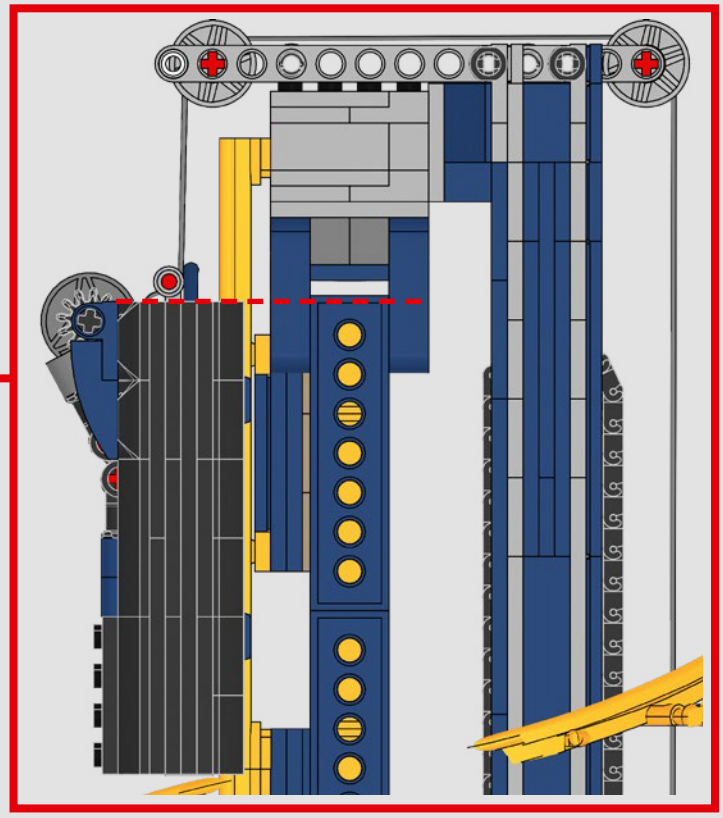

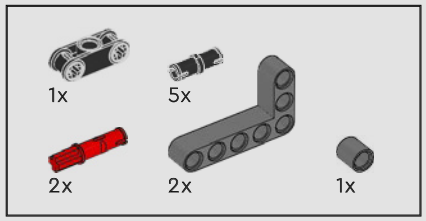

545

1

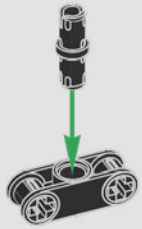

2

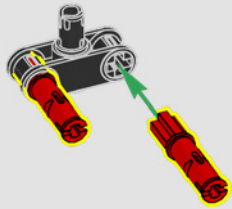

3

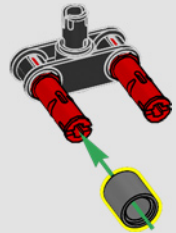

4

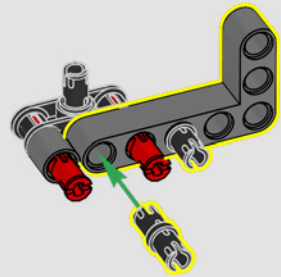

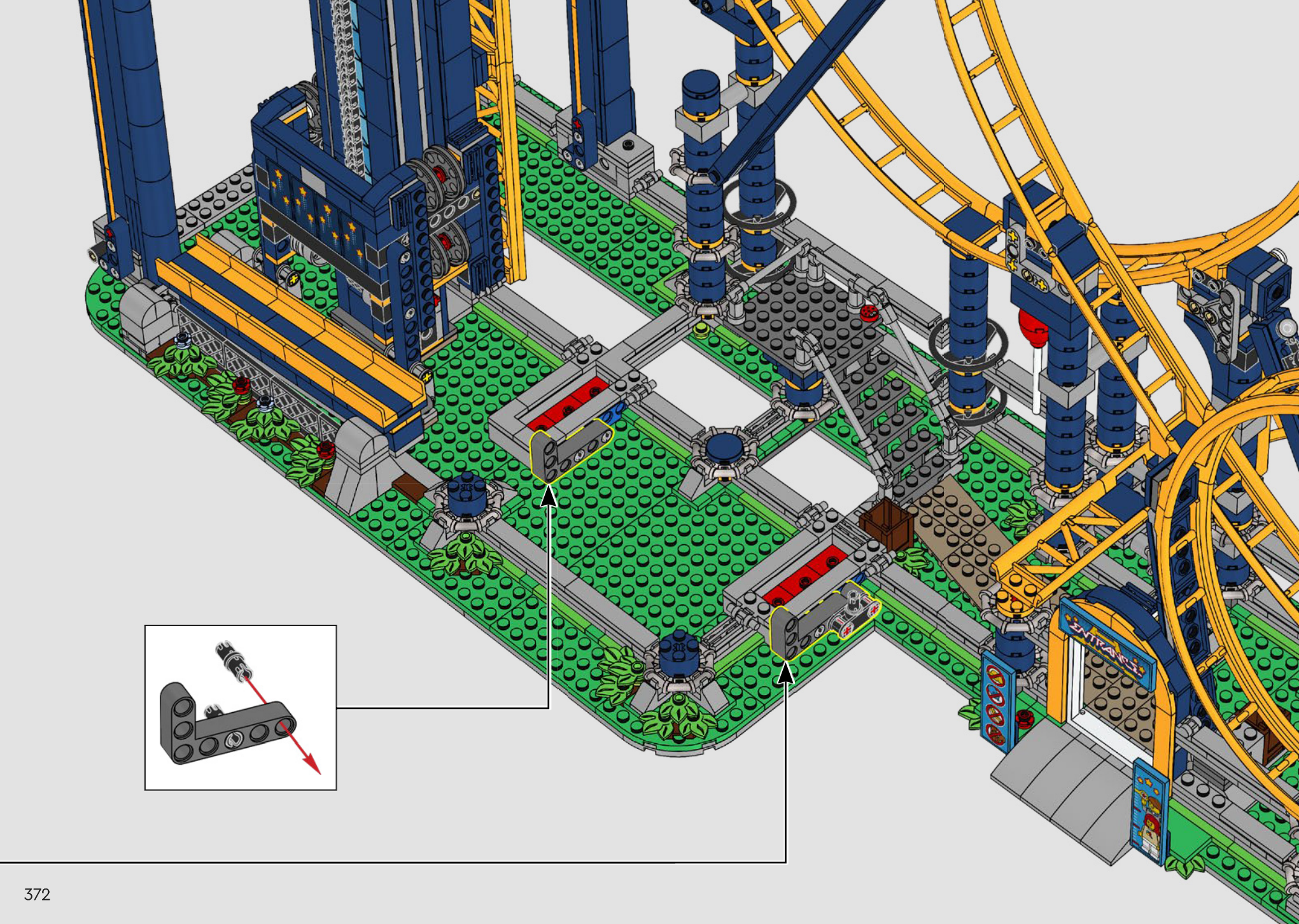
ENTRANCE

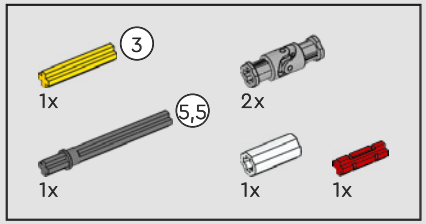

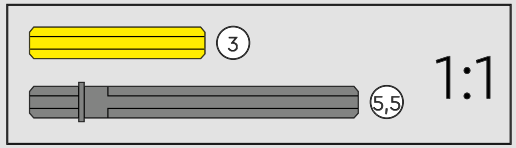

546

1

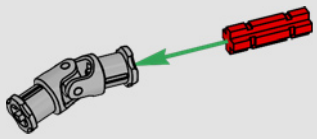

2

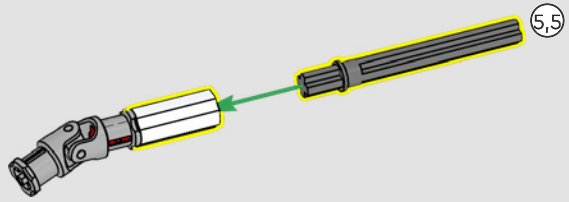

3

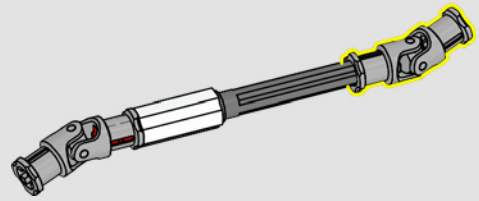

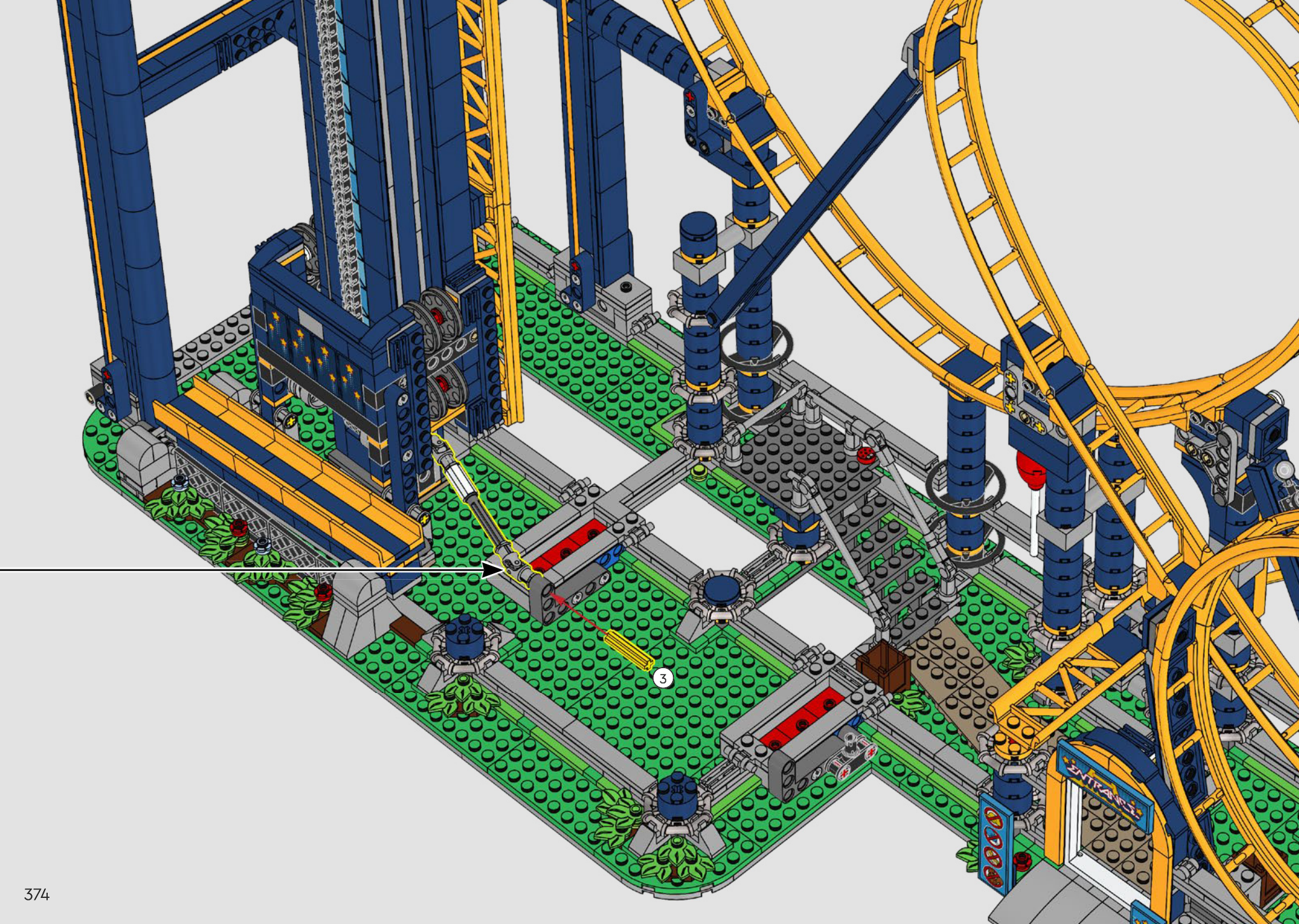
3

10
1x
2x
547
1
10
2
10
1:1
ENTRANCE
375

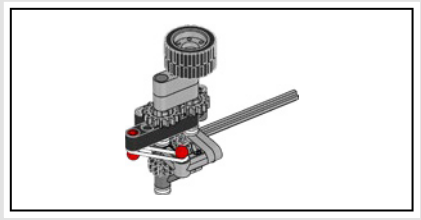

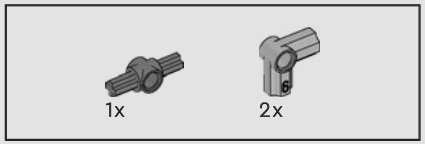

548

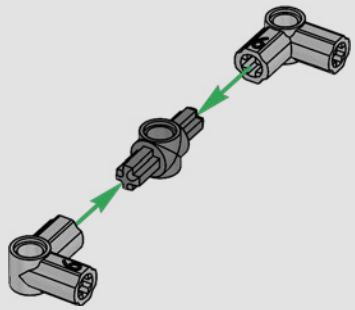

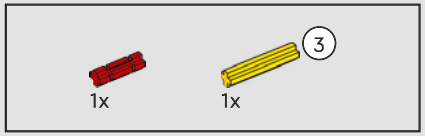

549

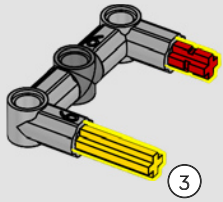

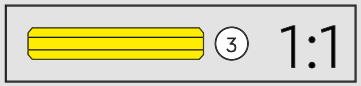

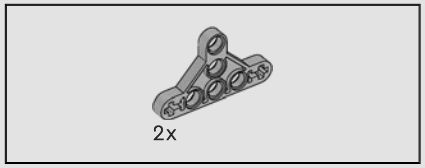

550

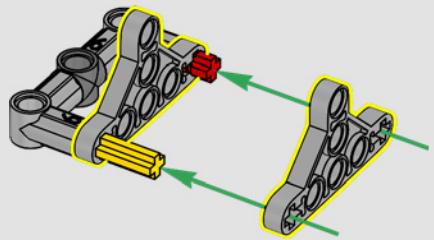

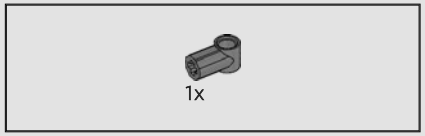

551

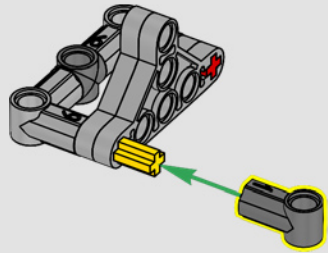

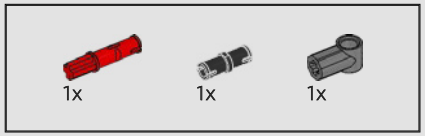

552

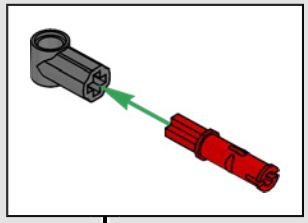

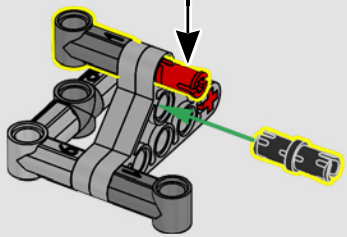

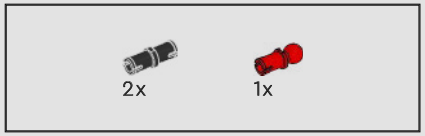

553

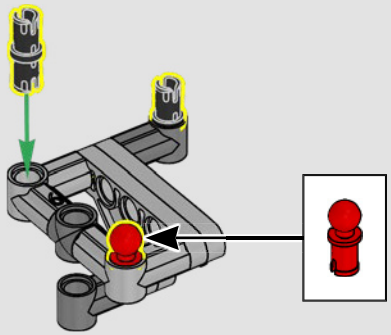

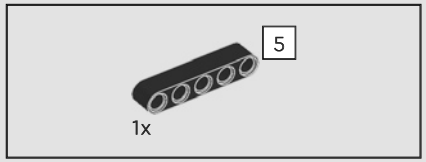

554

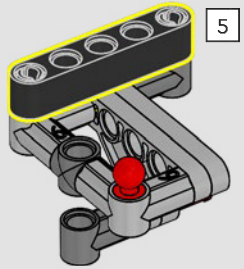

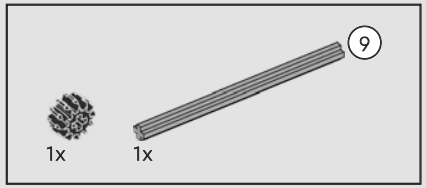

555

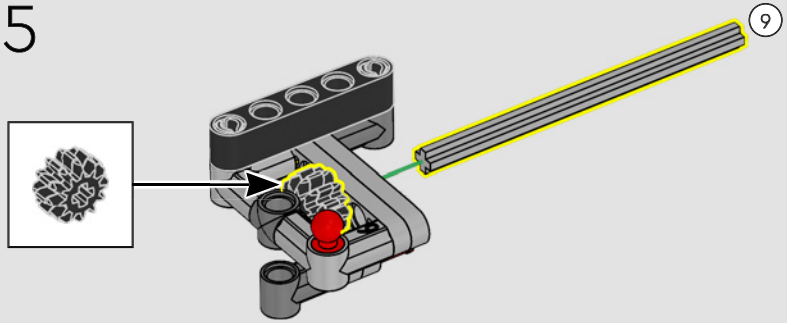

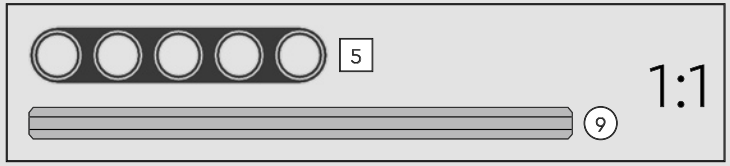

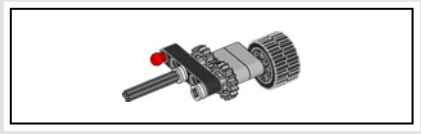

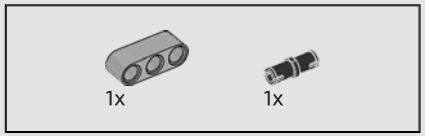

556

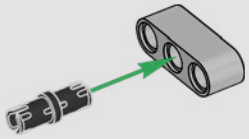

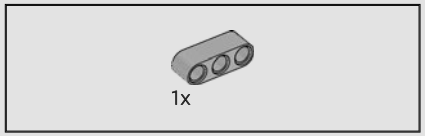

557

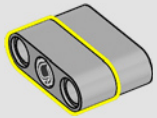

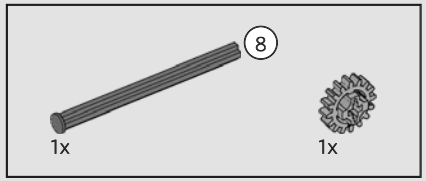

558

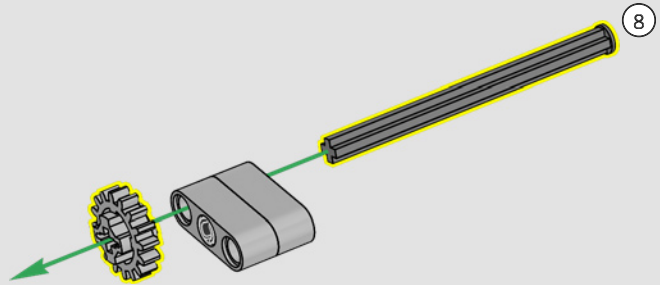

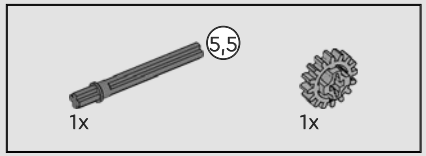

559

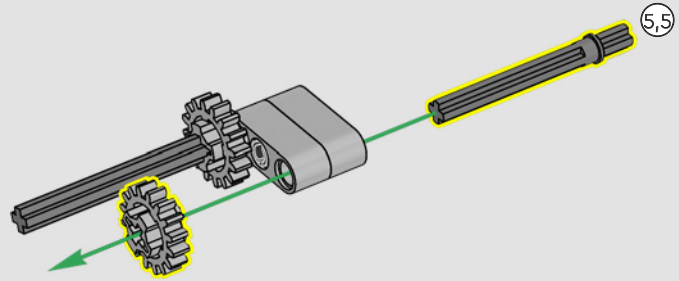

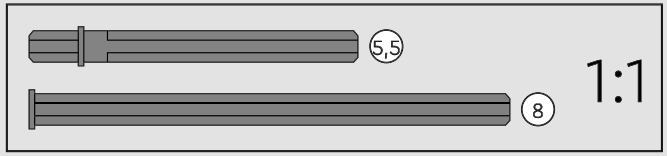

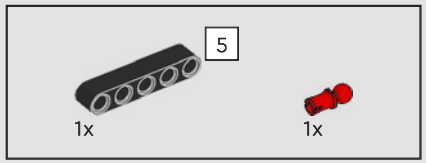

560

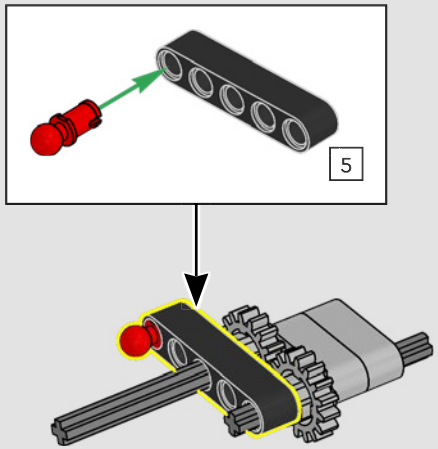

561

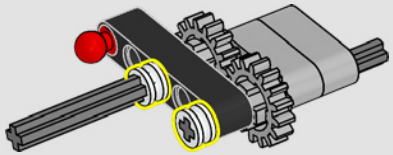

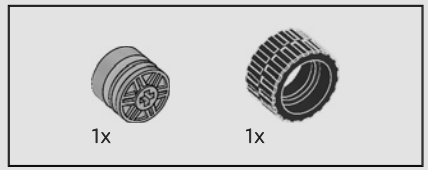

562

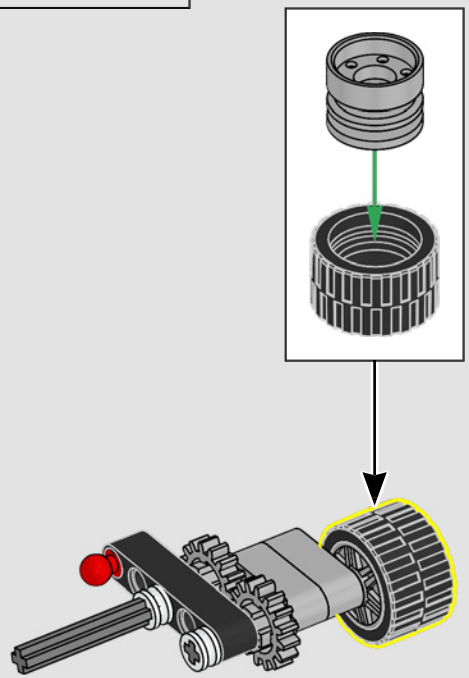

1x

563

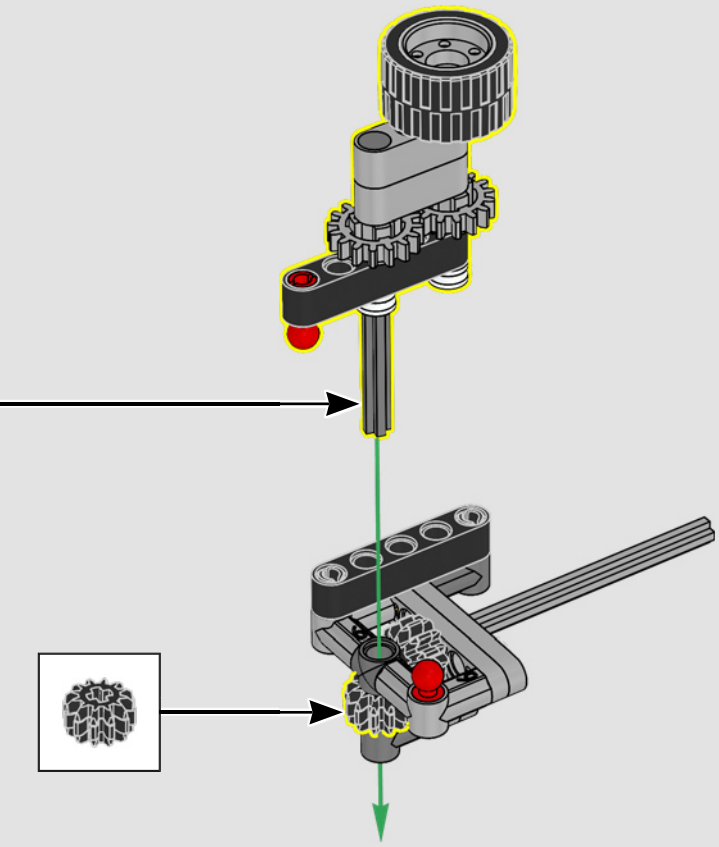

1x 1x

564

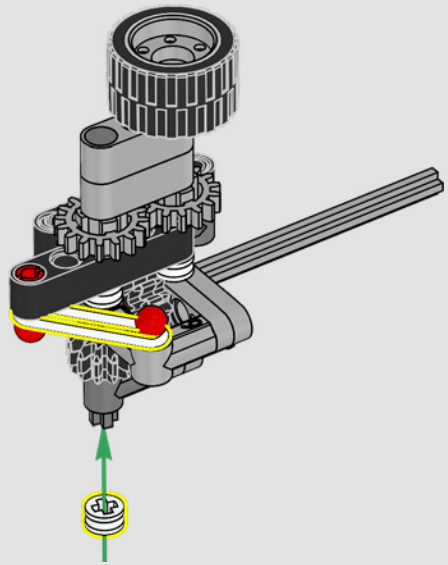

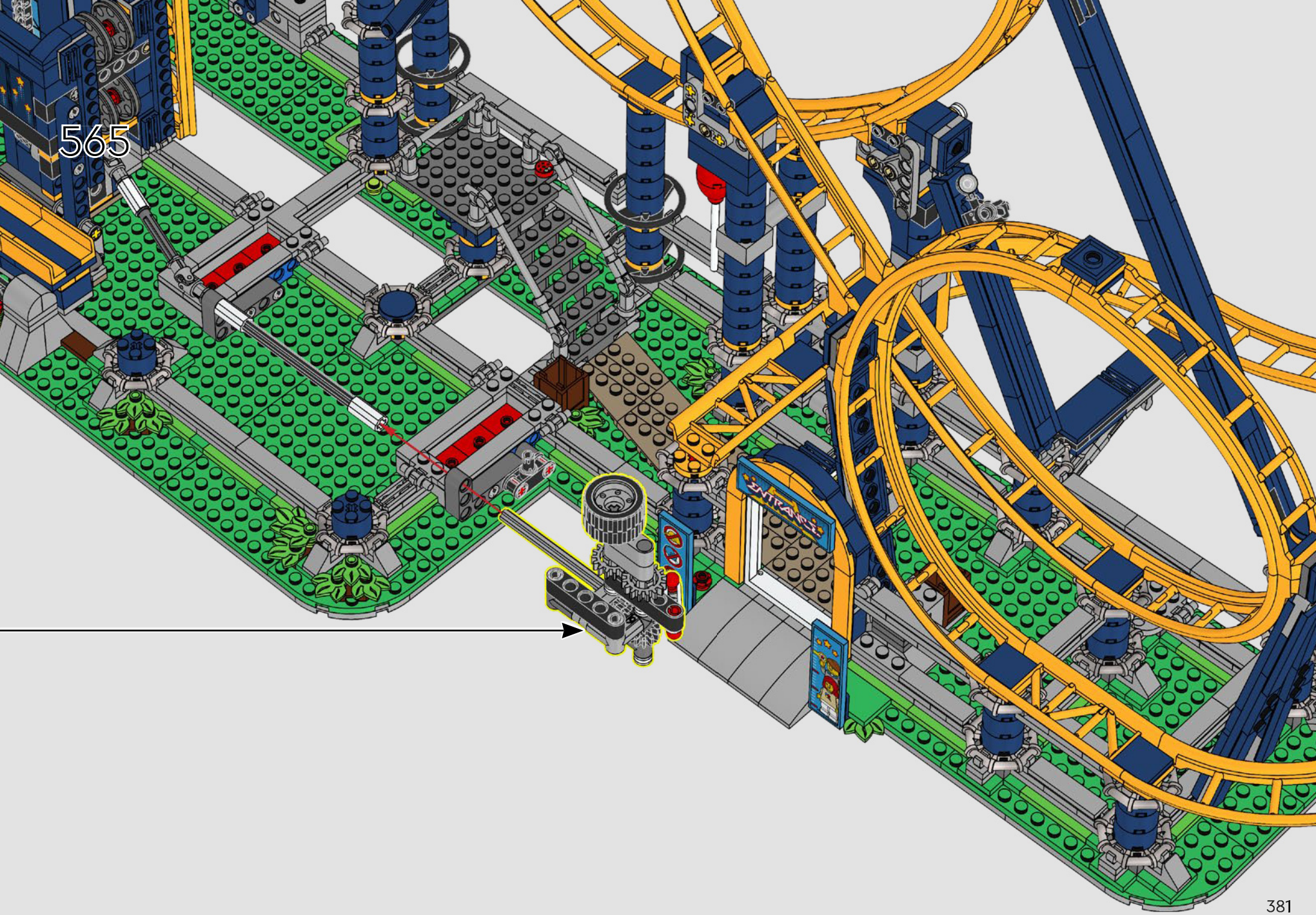
565
ENTRANCE

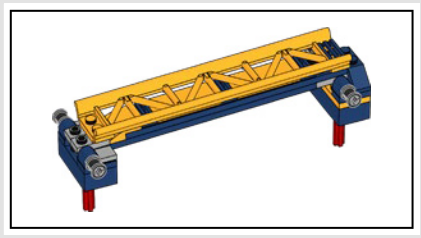

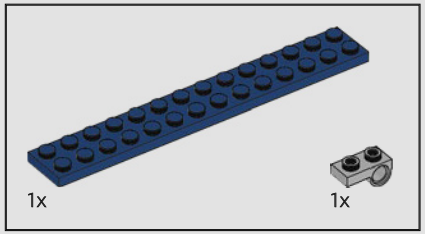

566

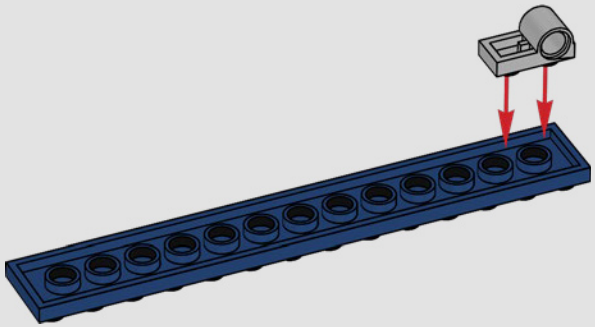

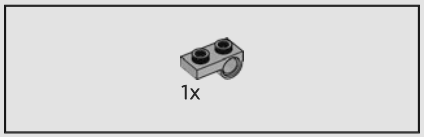

567

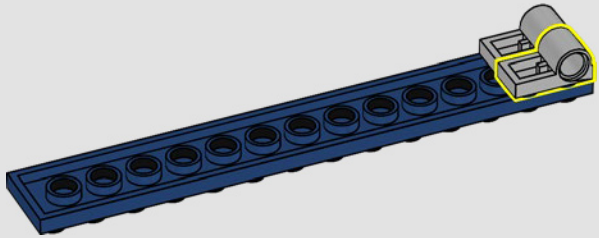

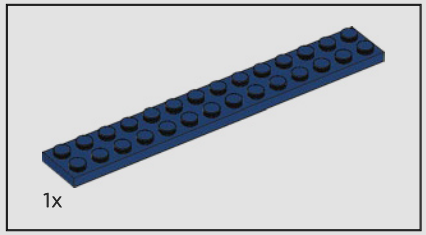

568

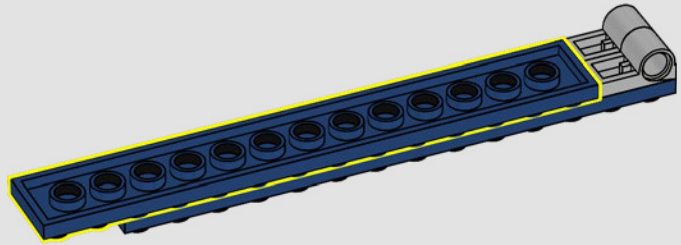

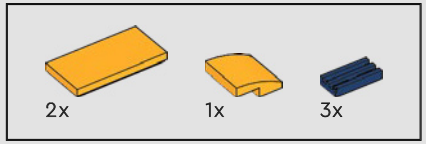

569

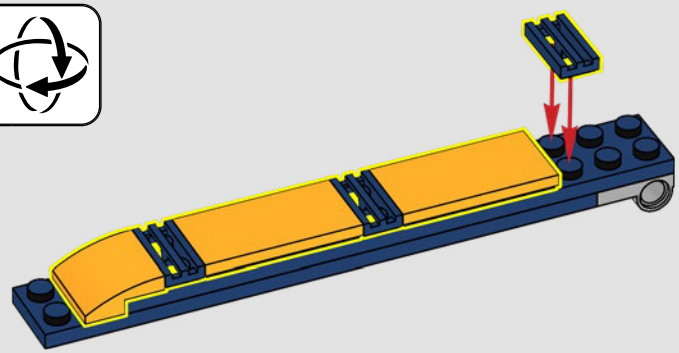

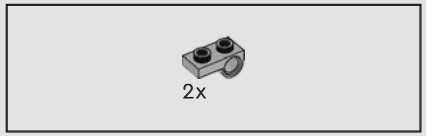

570

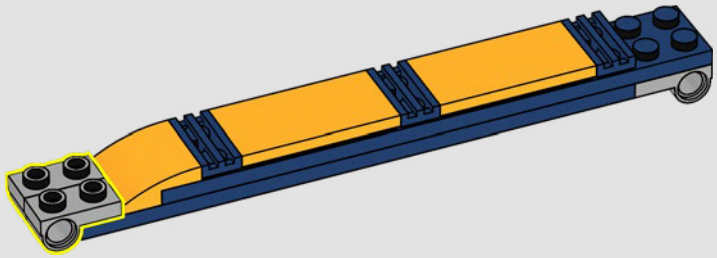

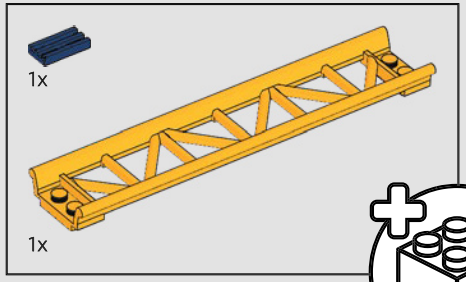

571

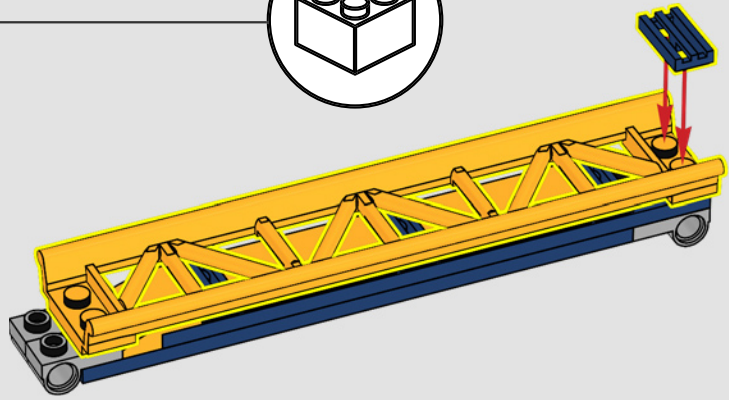

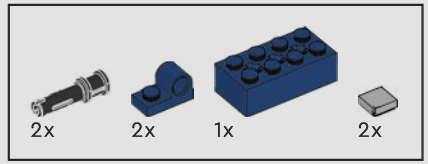

572

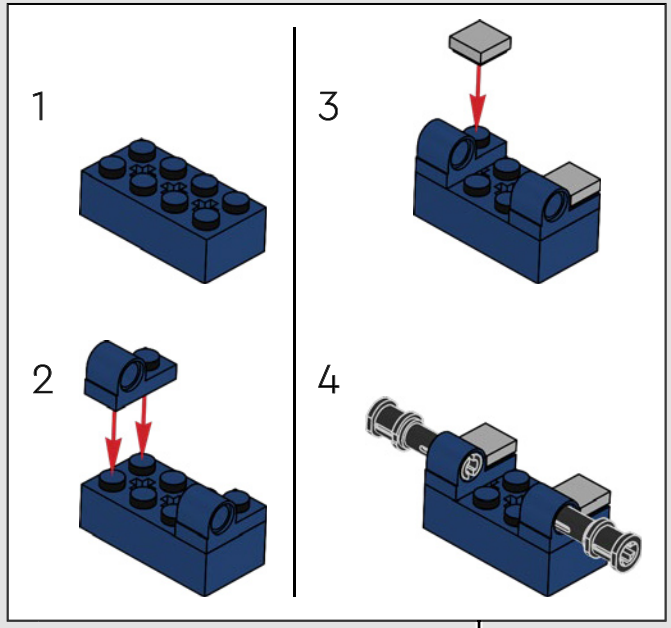

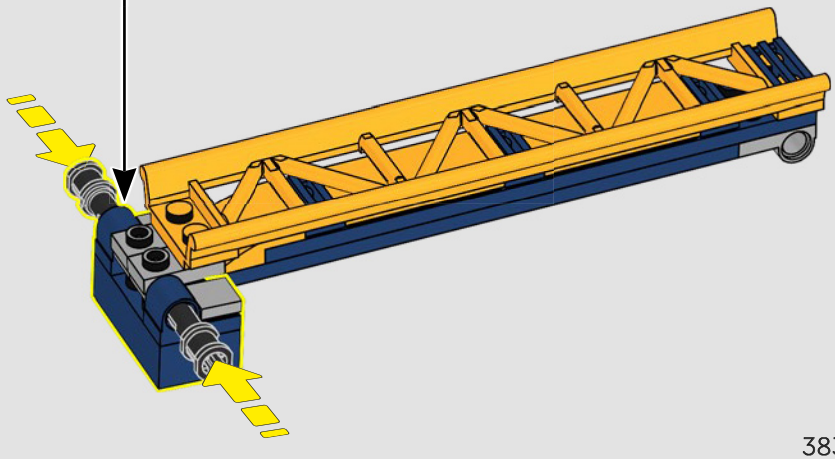

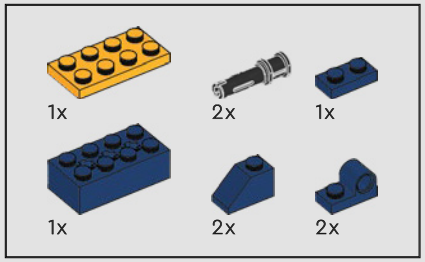

573

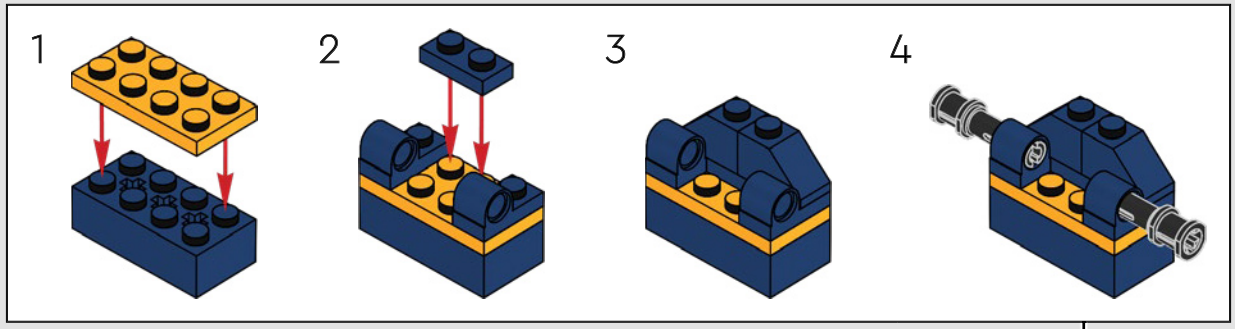

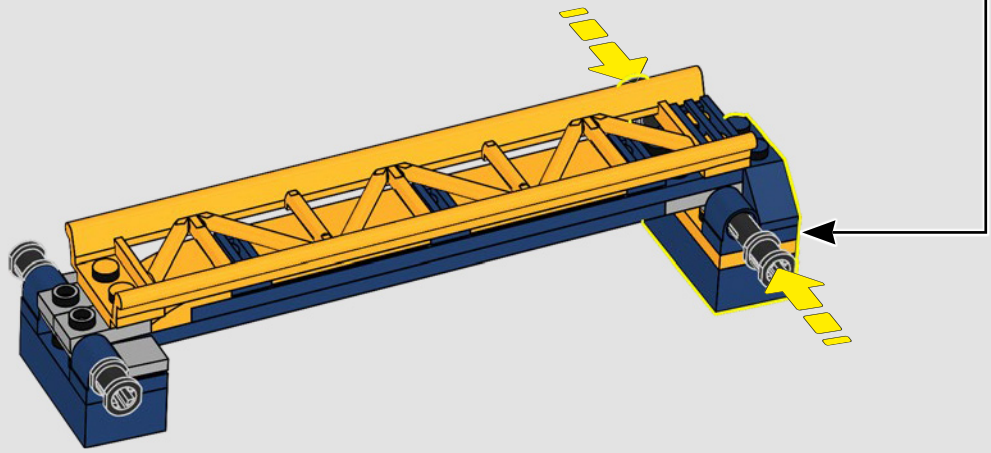

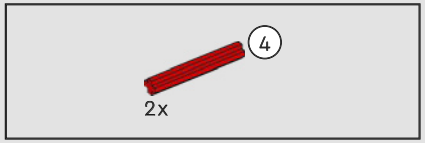

574

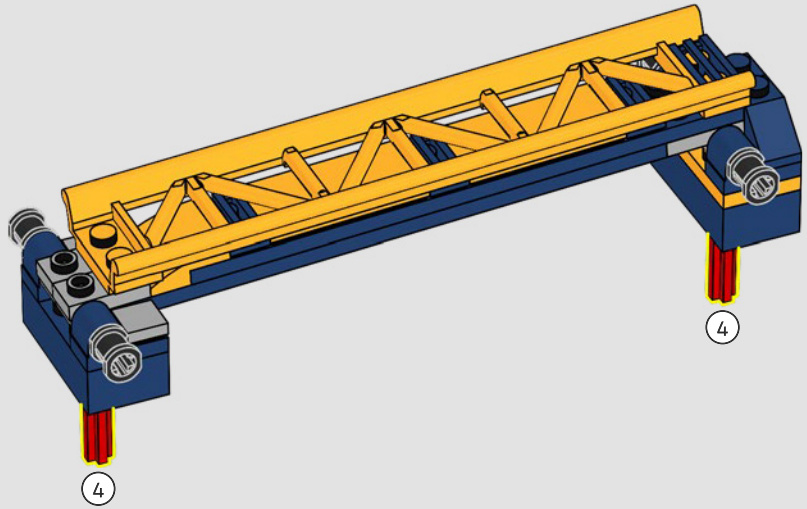

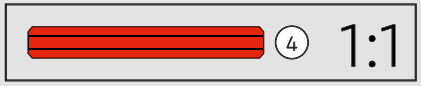

575

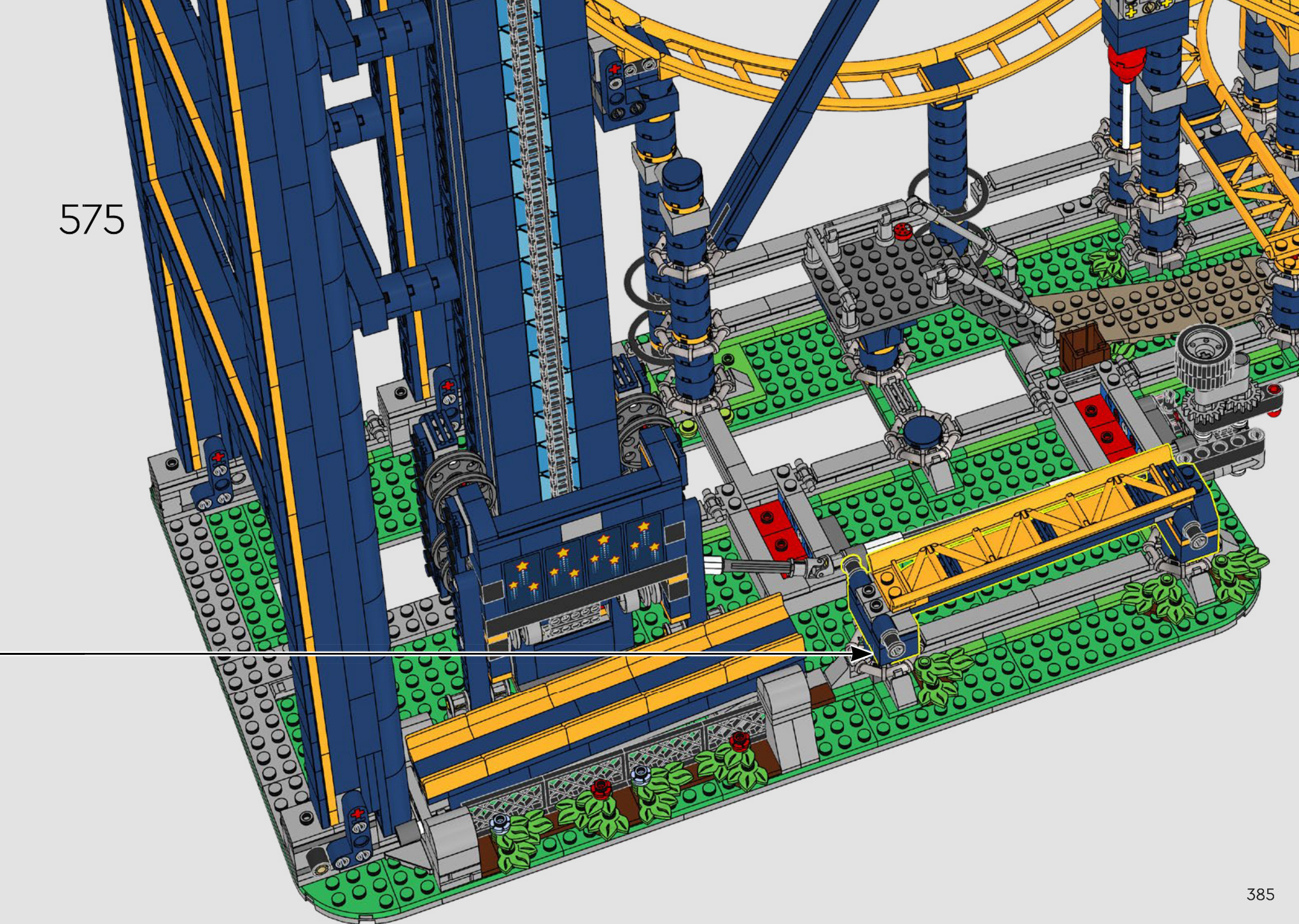

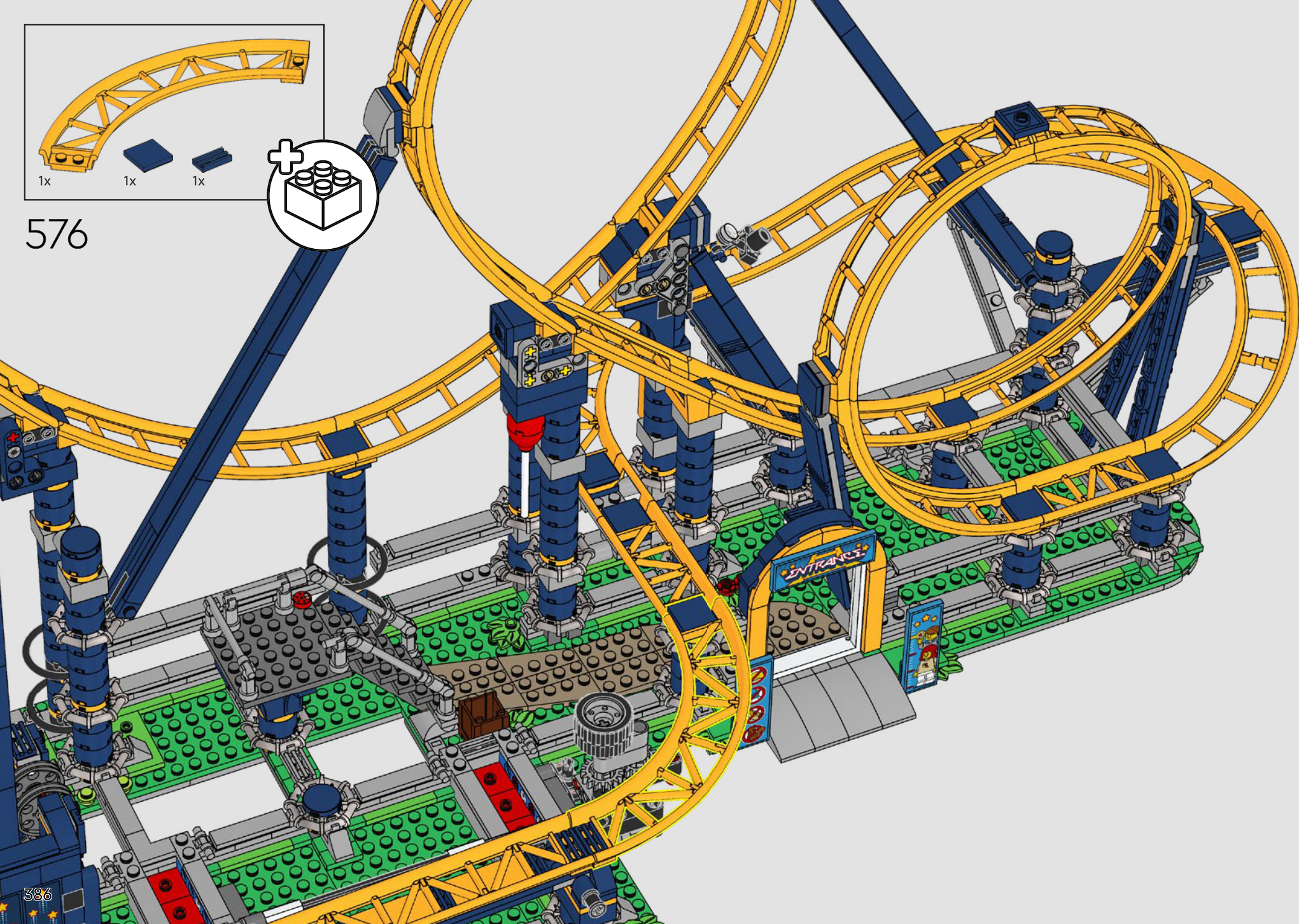
1x
1x
1x
576
ENTRANCE

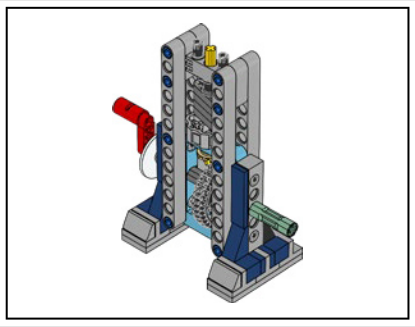

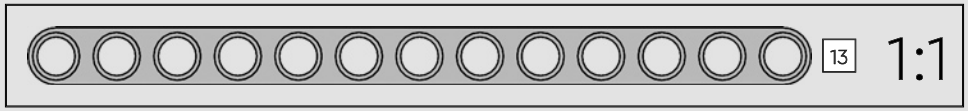

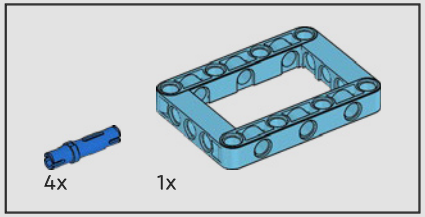

577

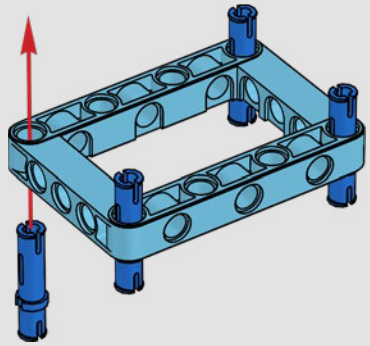

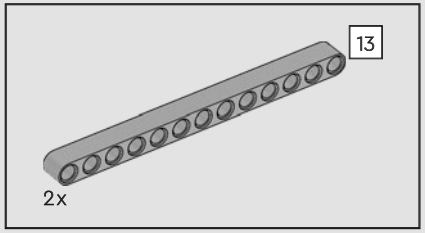

578

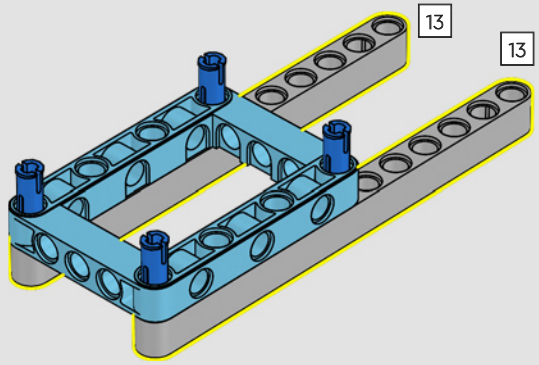

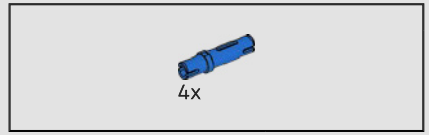

579

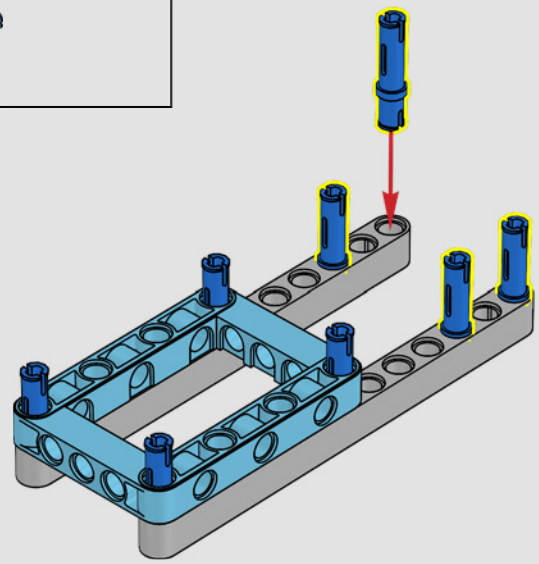

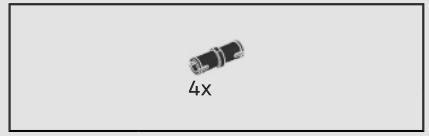

580

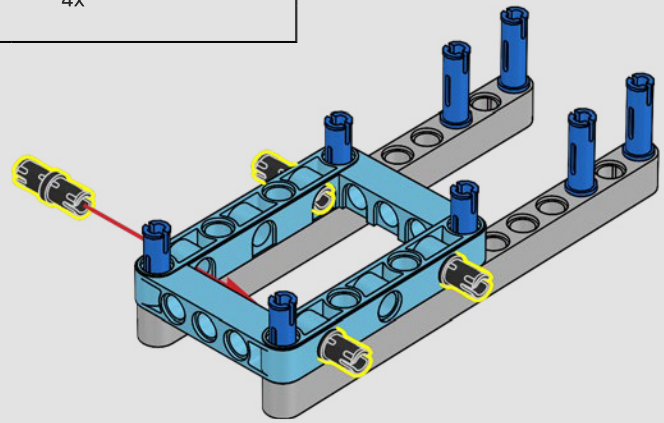

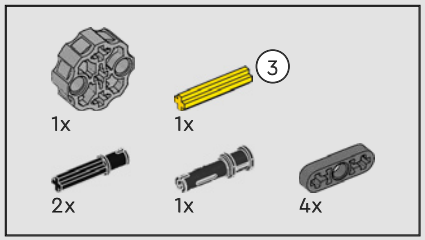

581

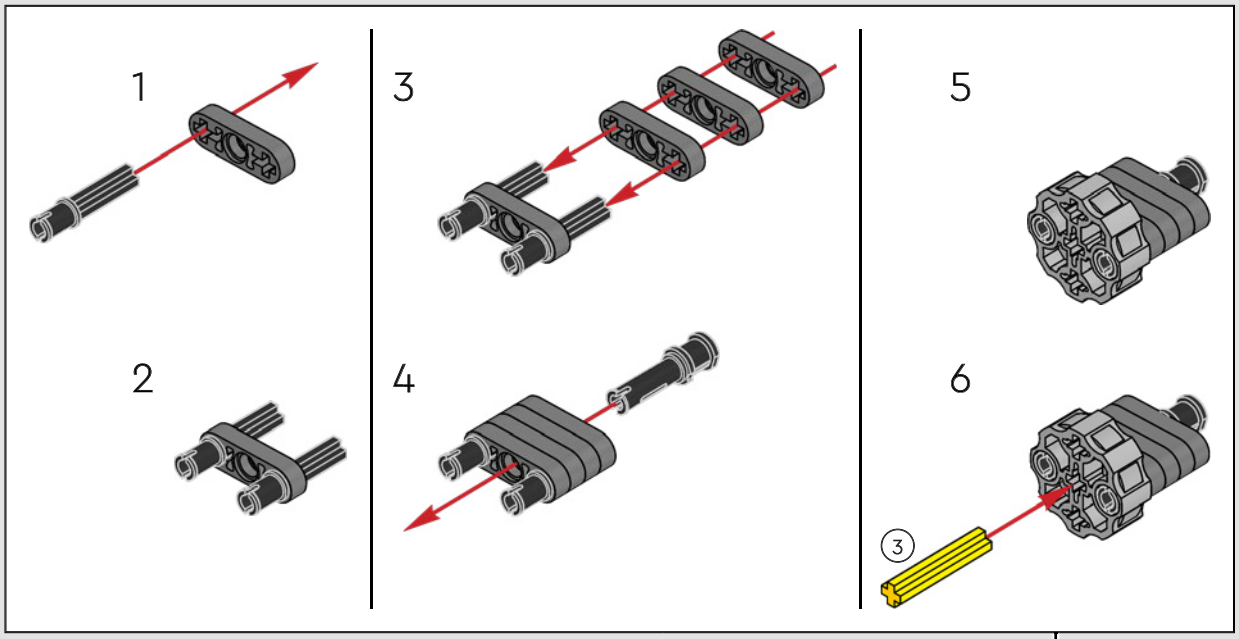

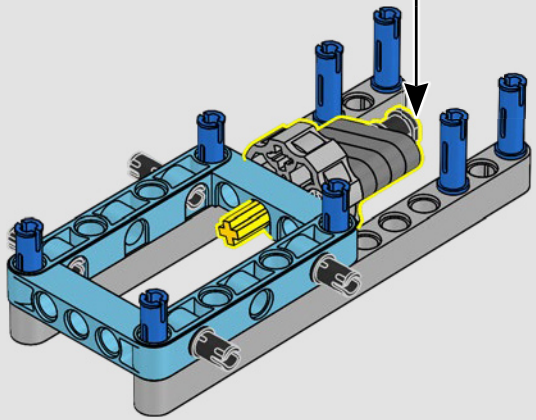

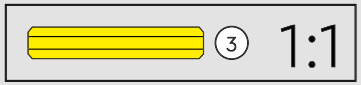

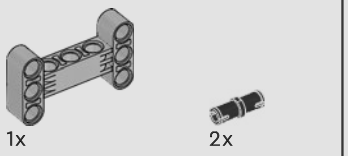

582

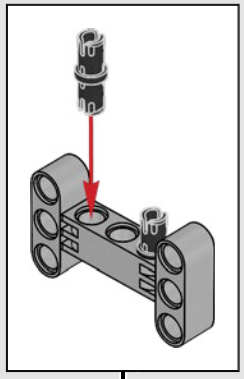

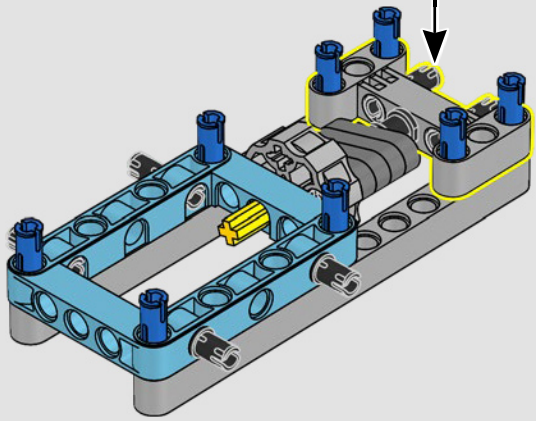

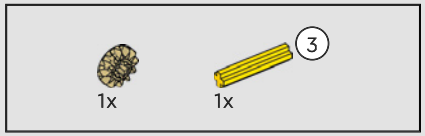

583

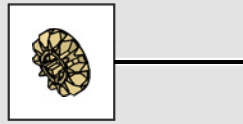

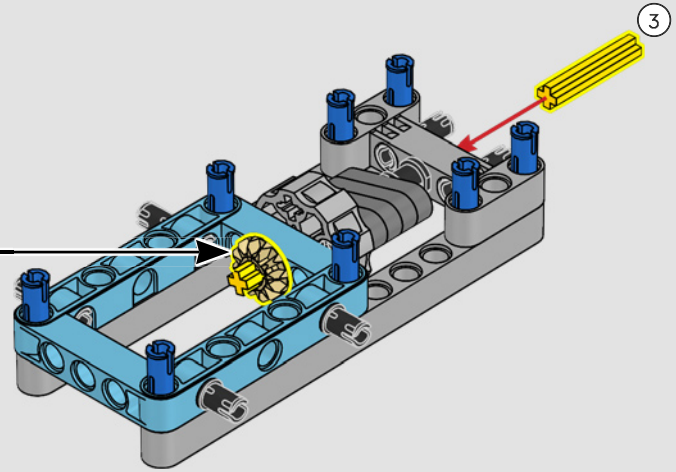

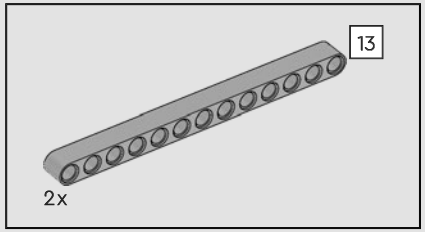

584

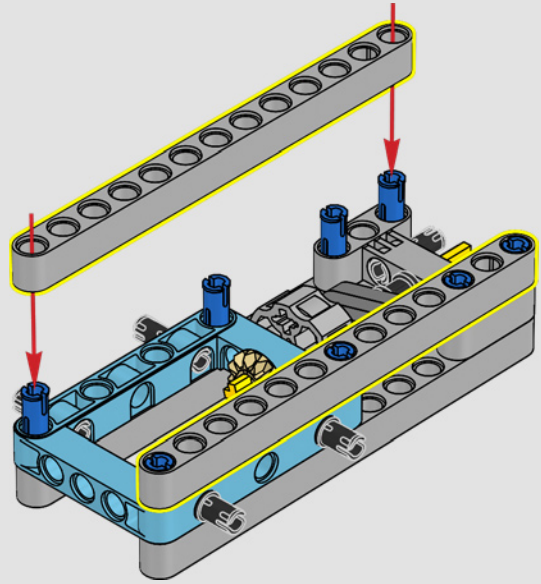

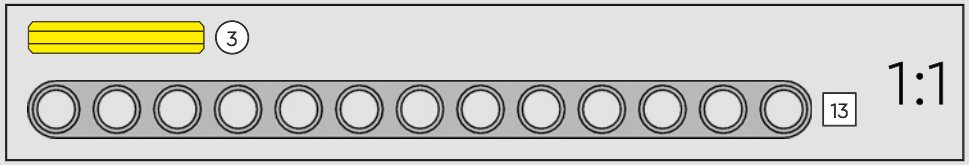

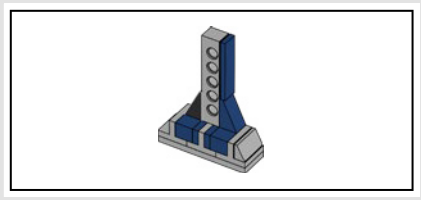

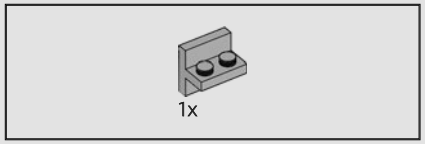

585

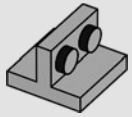

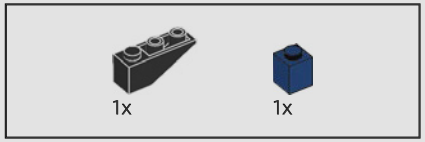

586

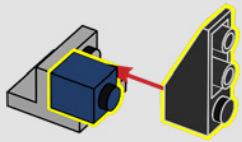

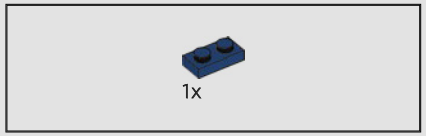

587

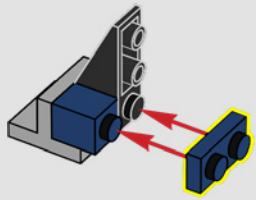

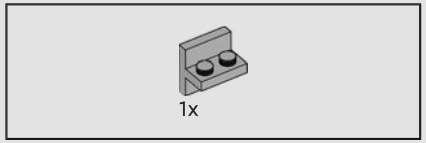

588

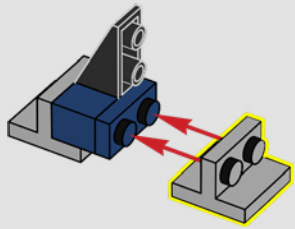

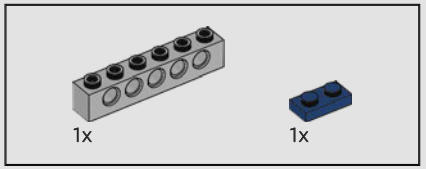

589

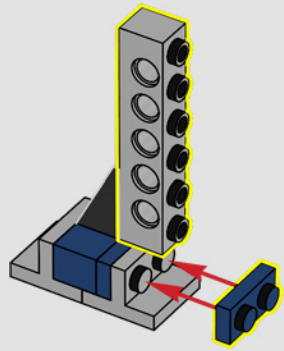

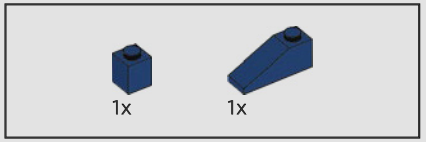

590

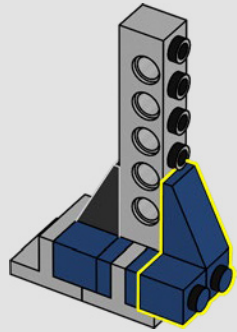

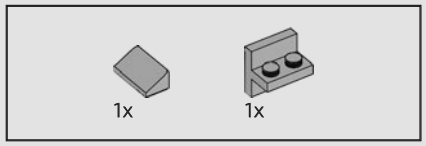

591

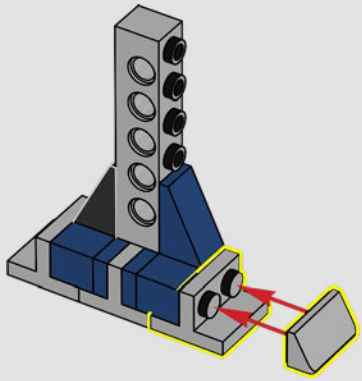

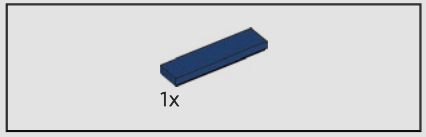

592

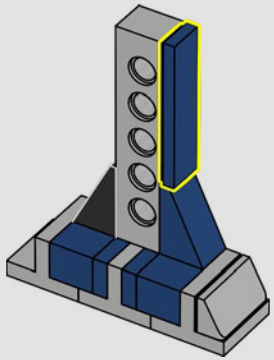

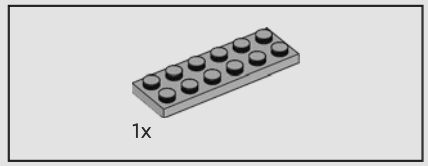

593

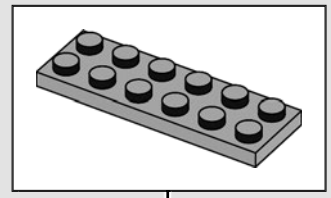

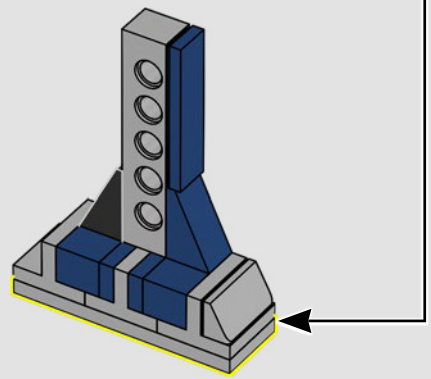

594

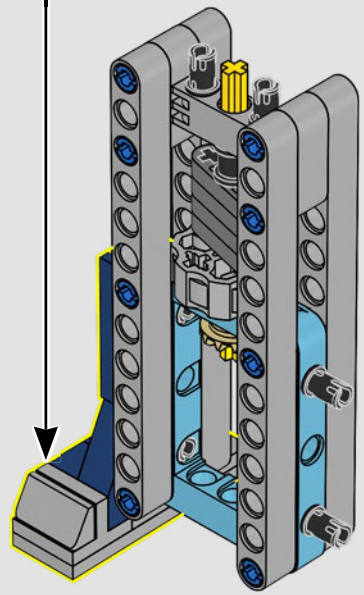

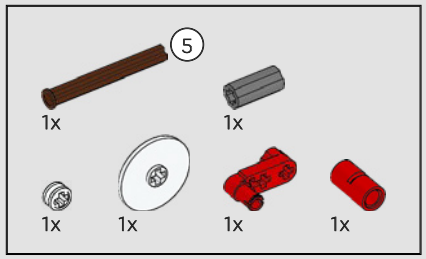

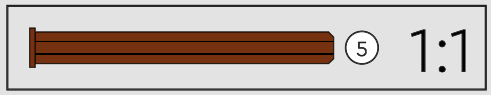

595

1

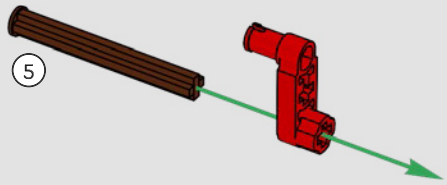

2

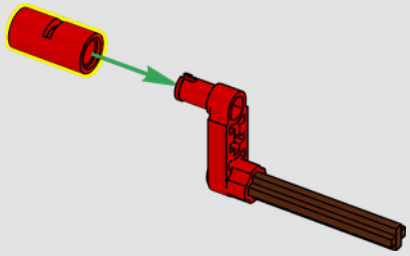

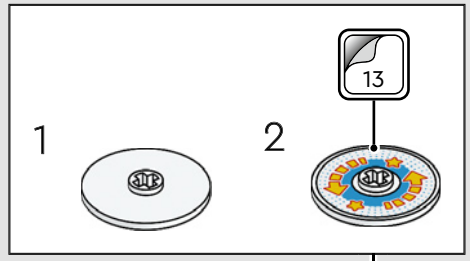

3

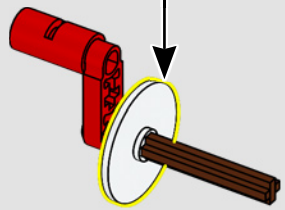

4

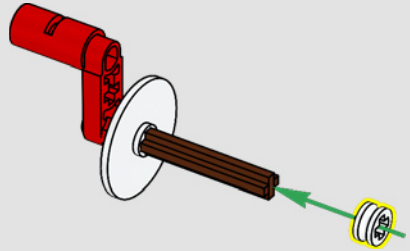

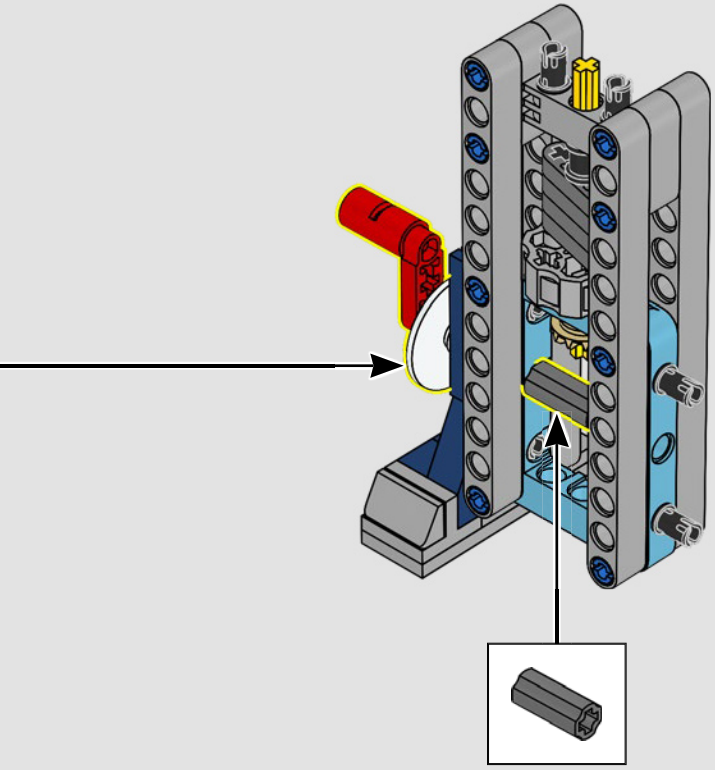

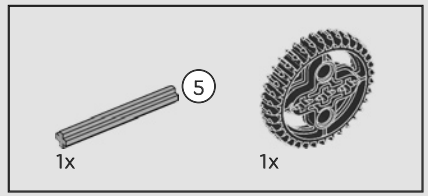

596

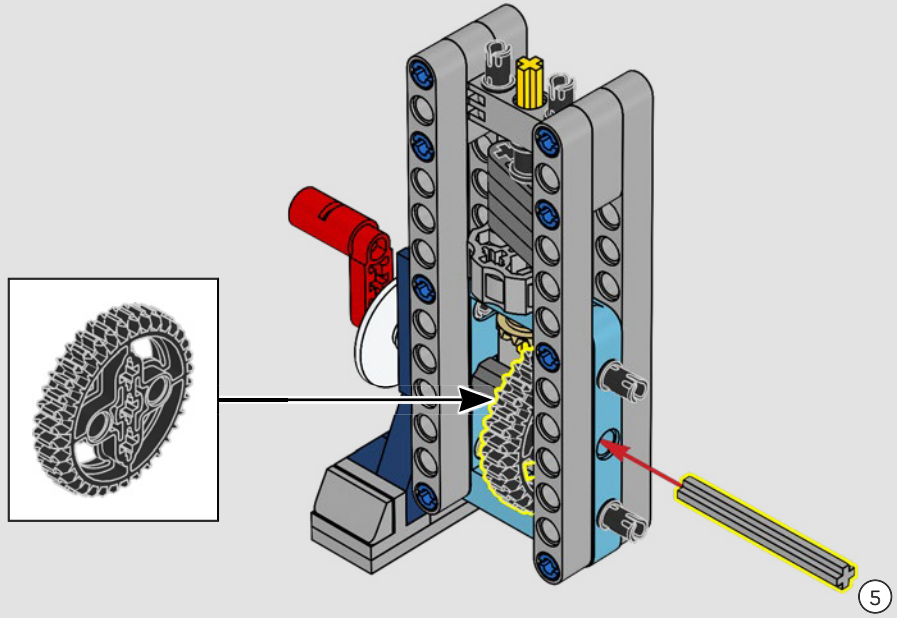

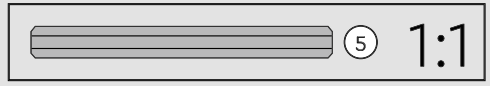

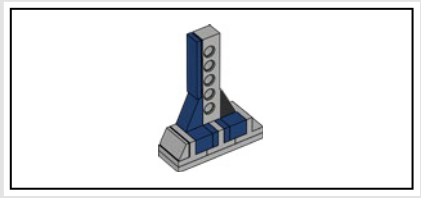

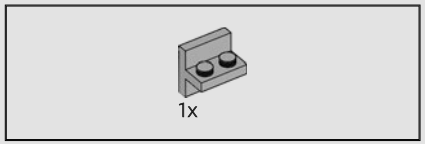

597

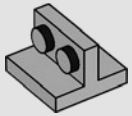

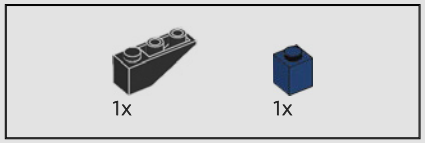

598

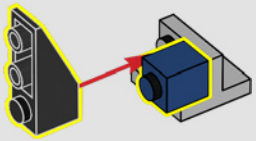

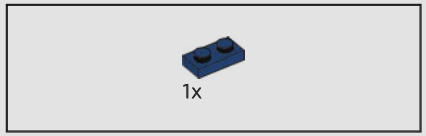

599

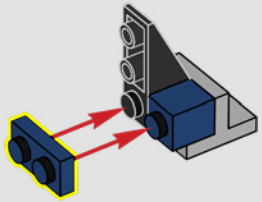

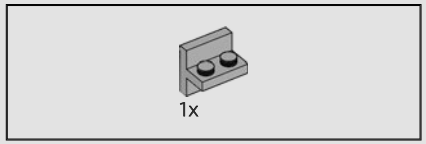

600

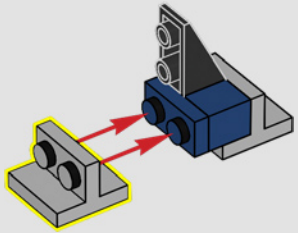

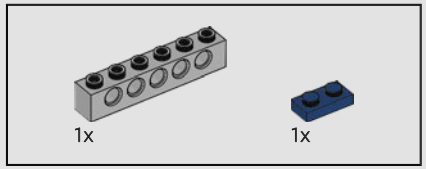

601

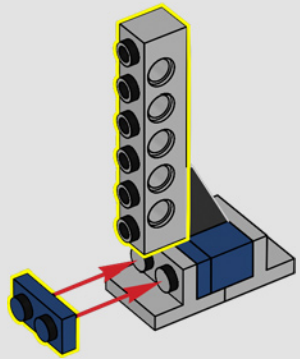

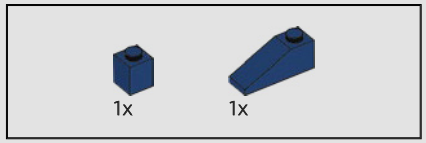

602

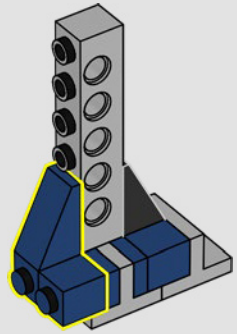

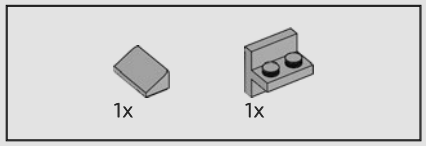

603

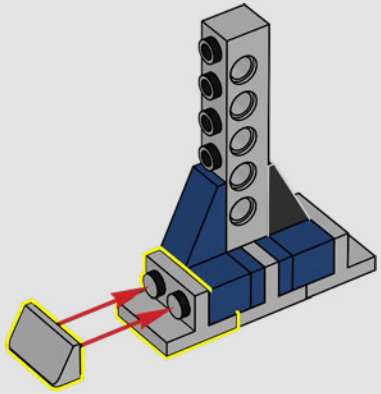

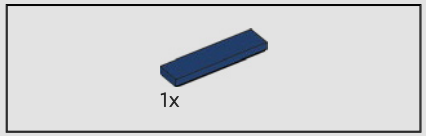

604

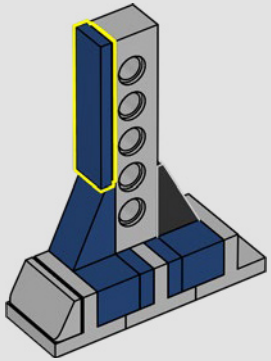

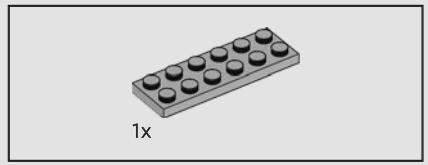

605

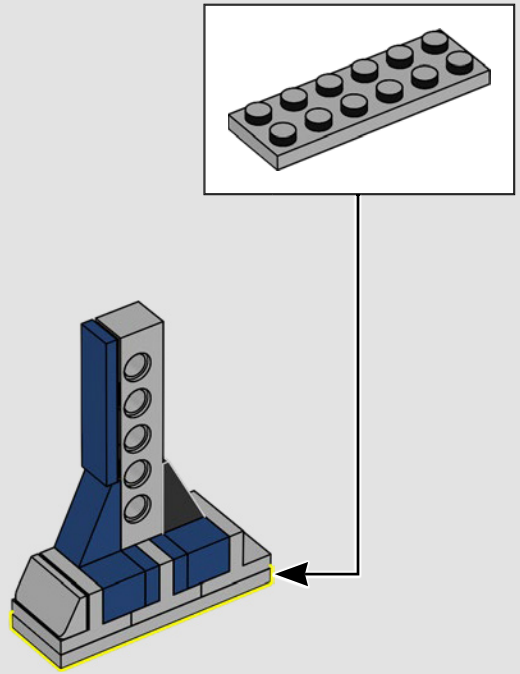

606

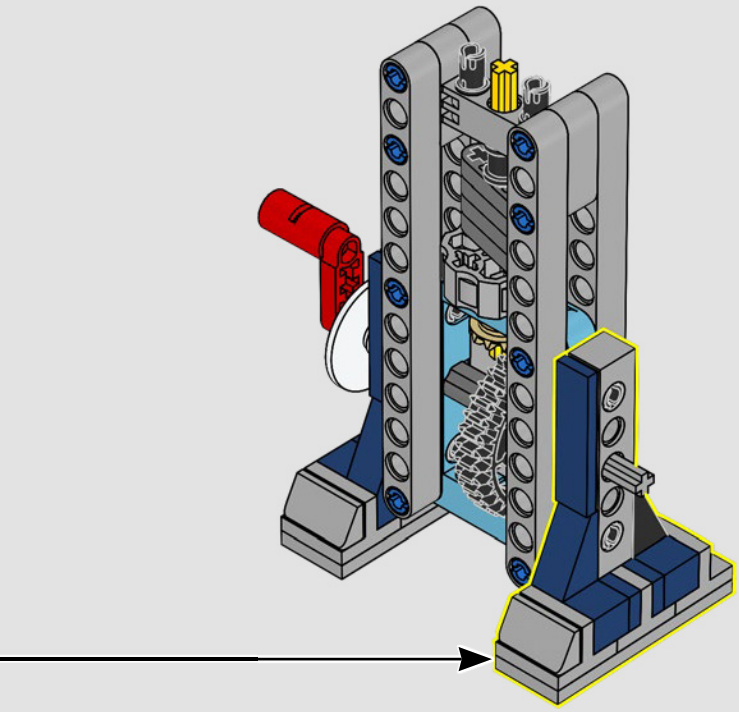

607

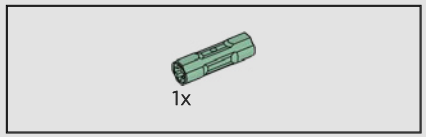

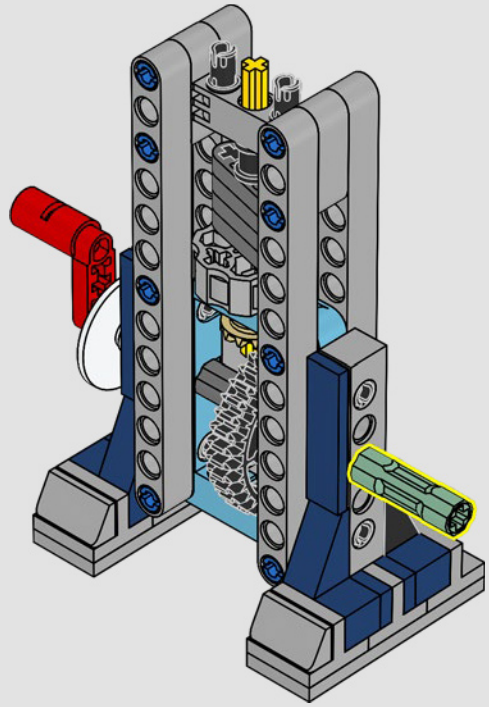

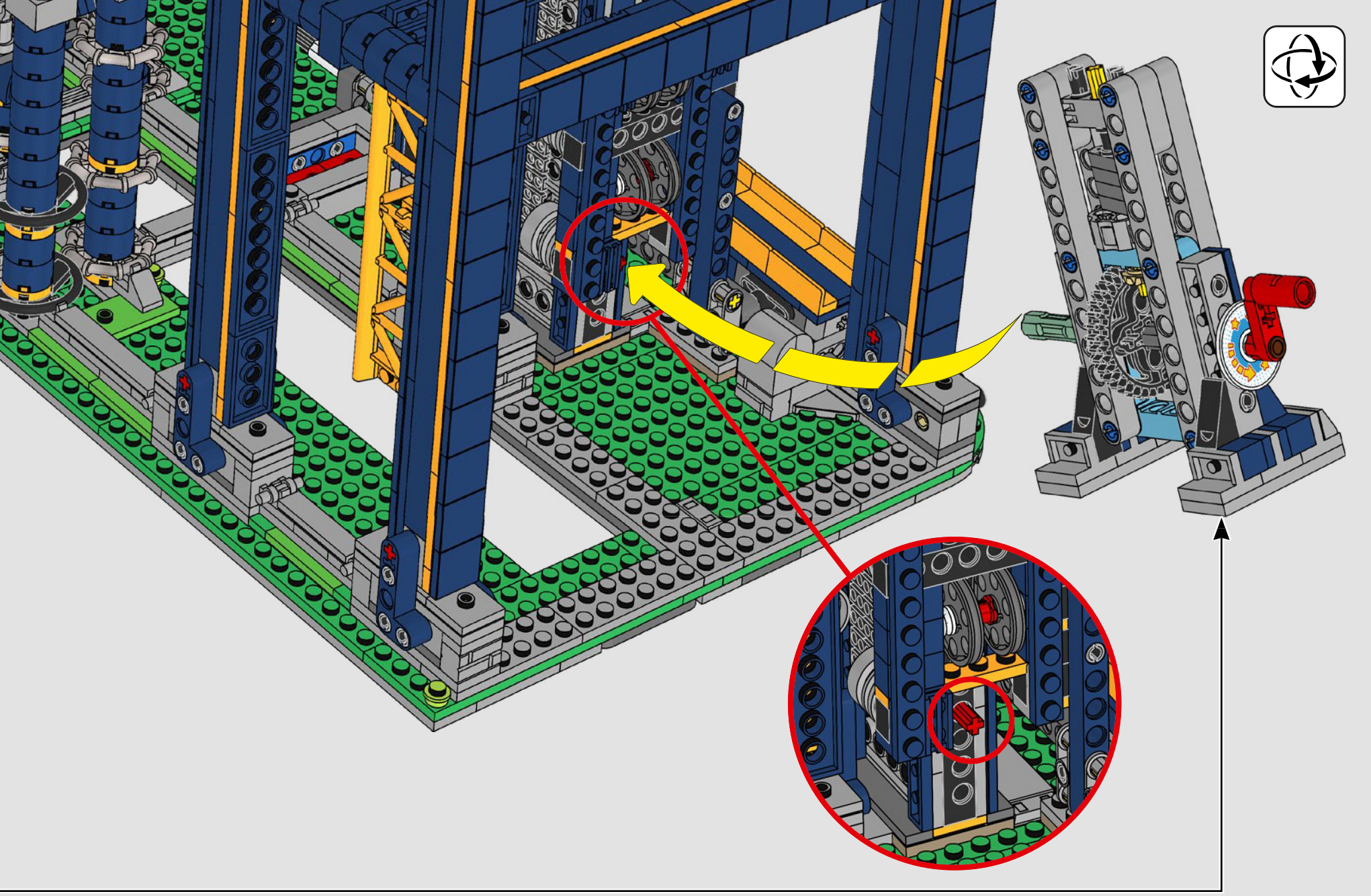

608

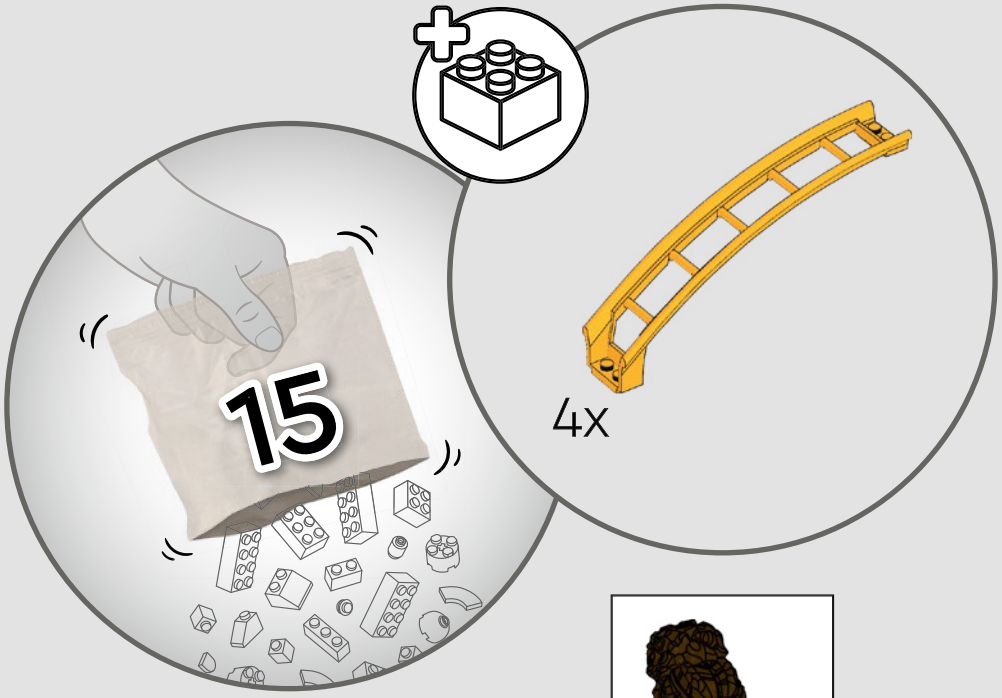
15
4x

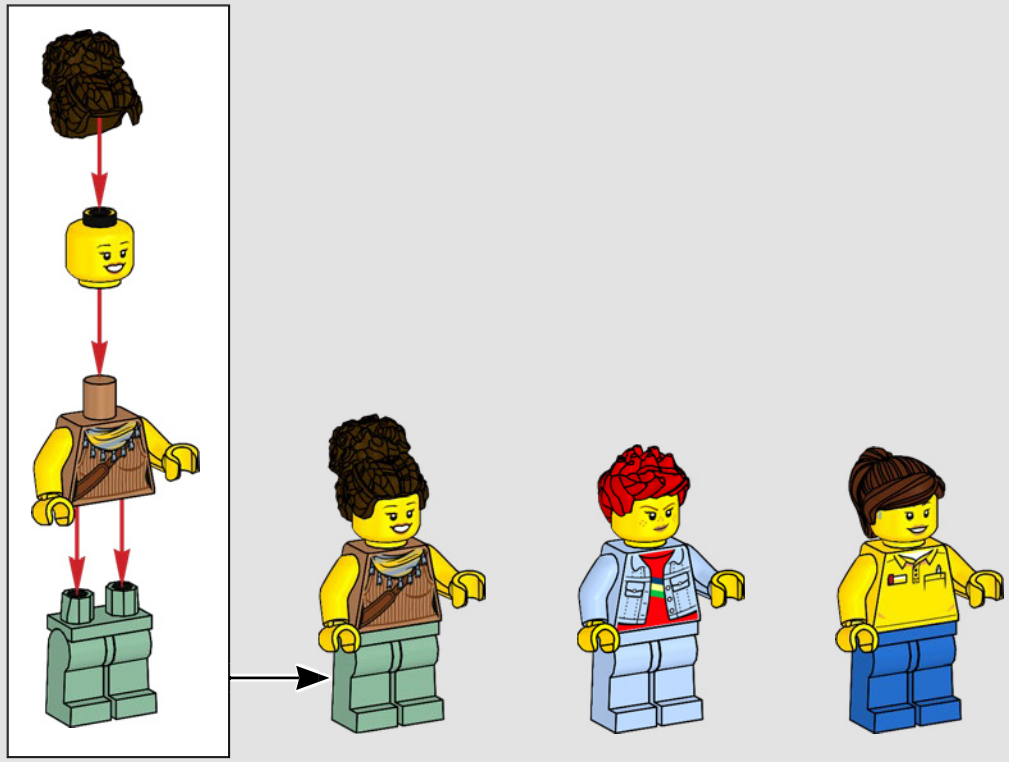

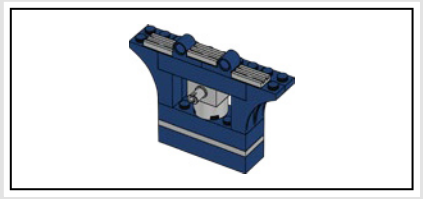

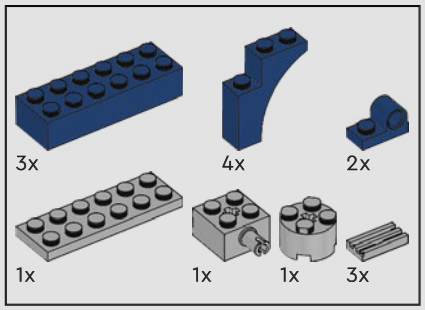

609

1

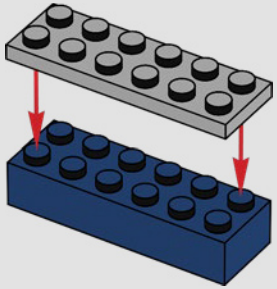

2

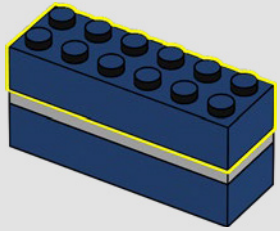

3

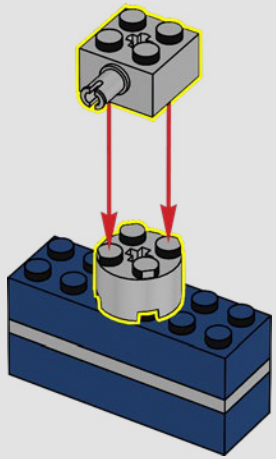

4

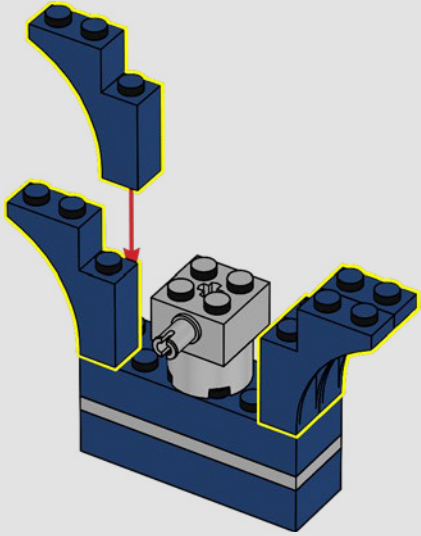

5

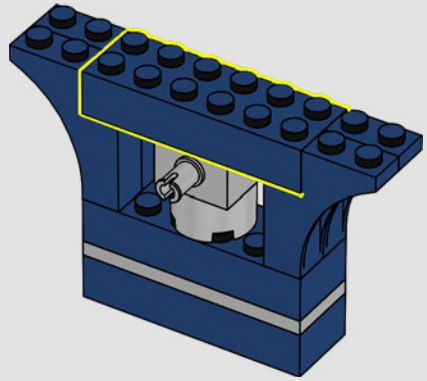

6

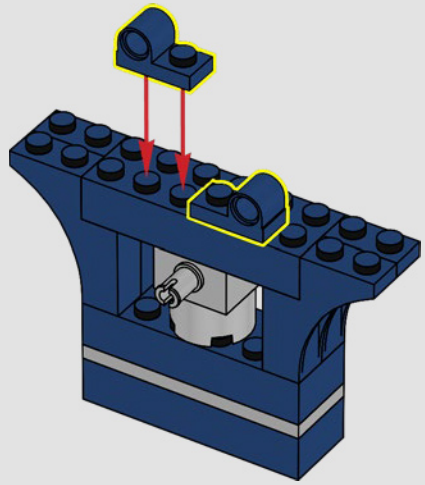

7

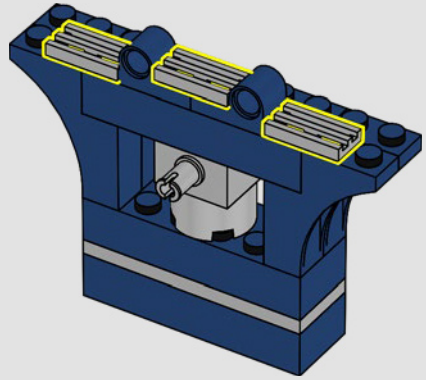

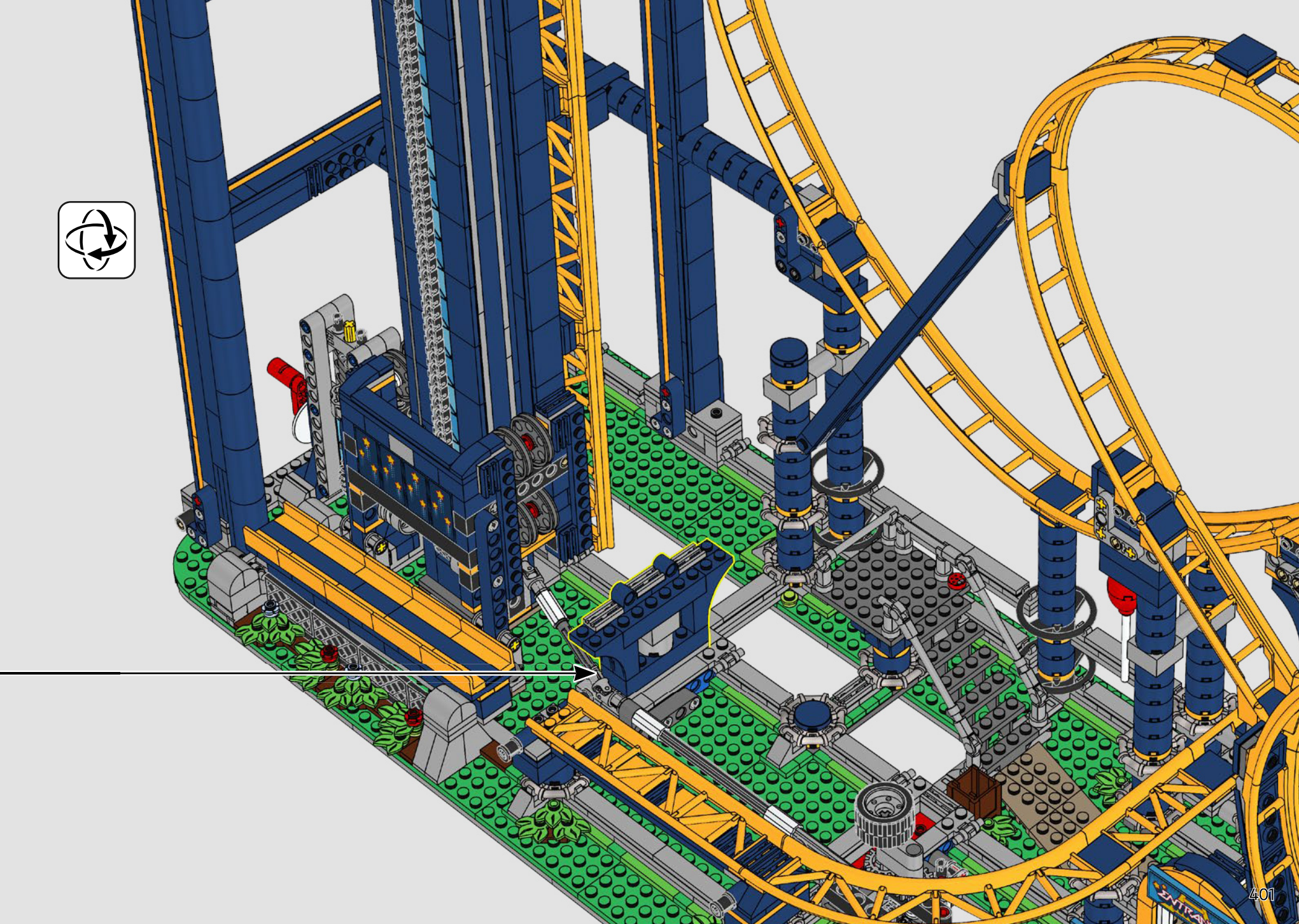
ENTRANCE

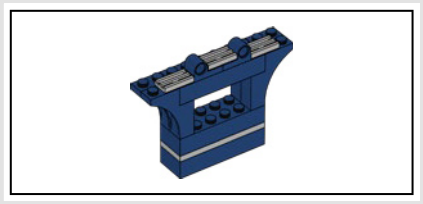

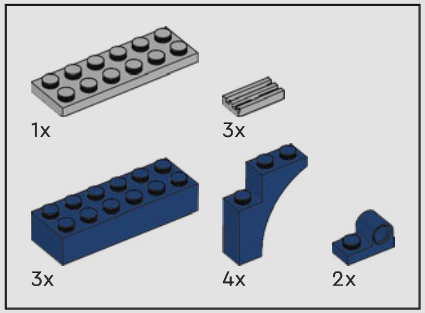

610

1

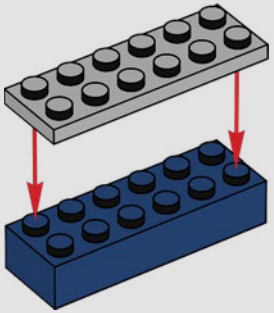

2

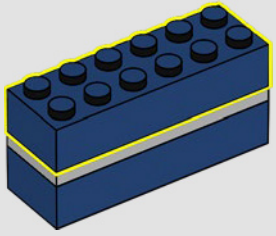

3

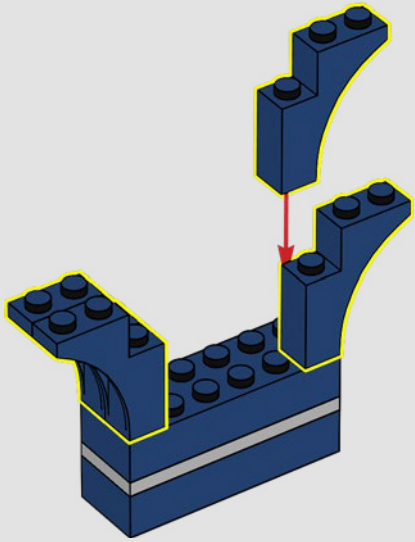

4

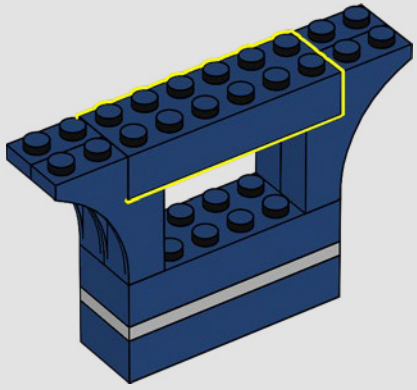

5

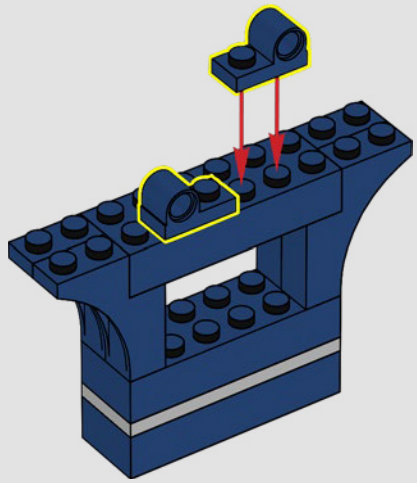

6

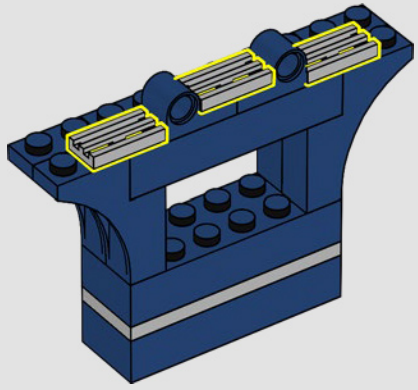

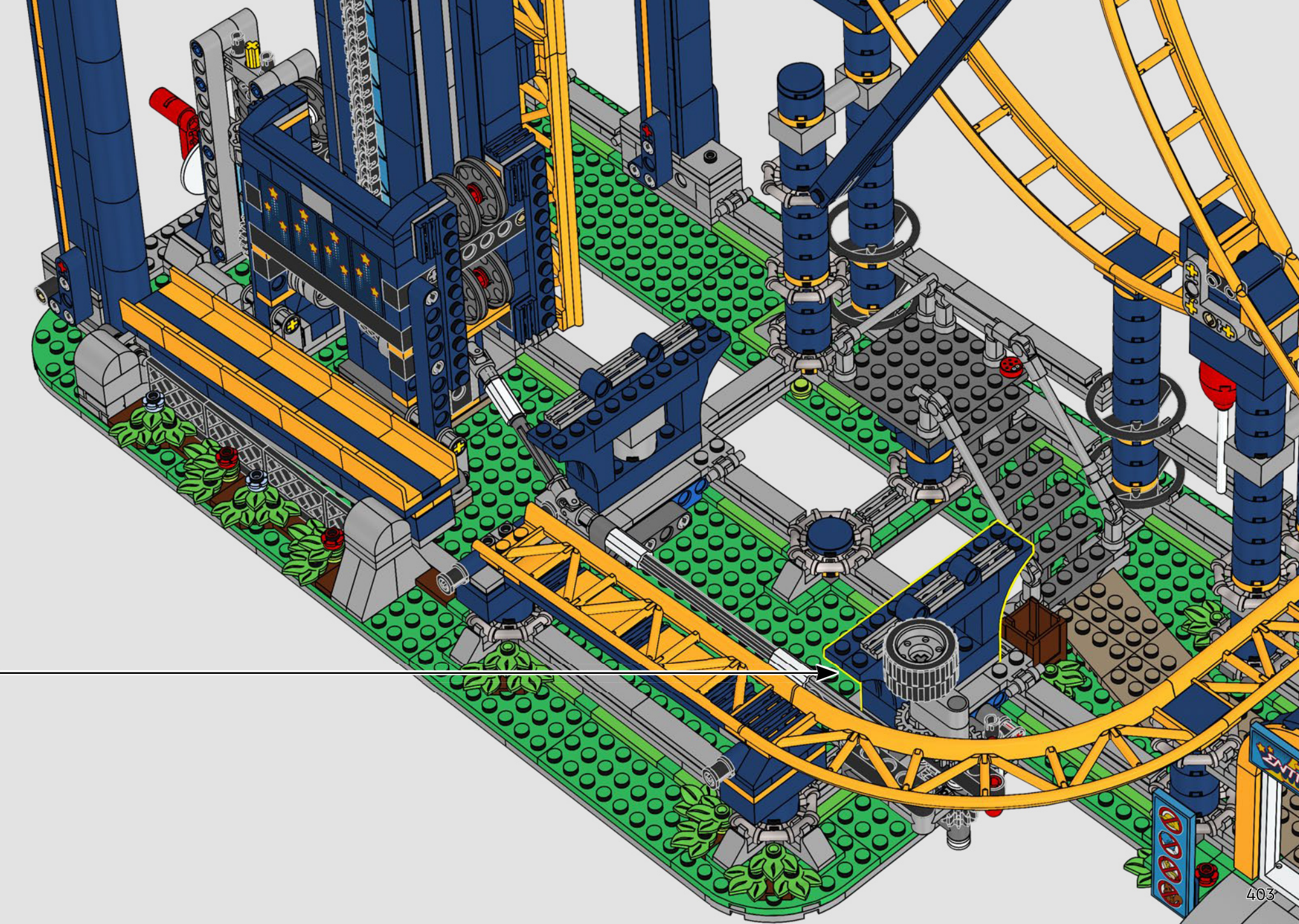

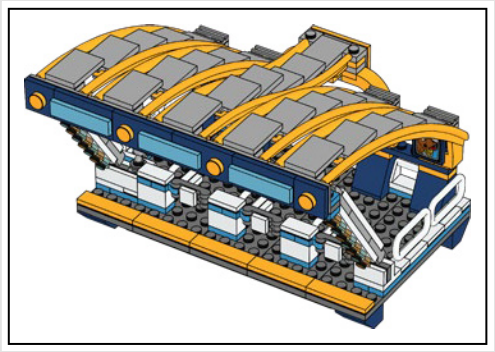

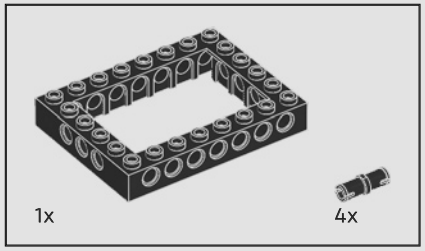

611

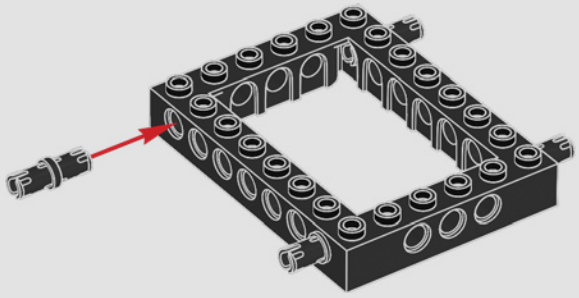

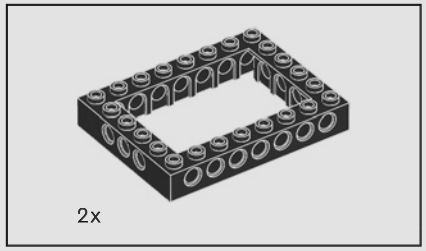

612

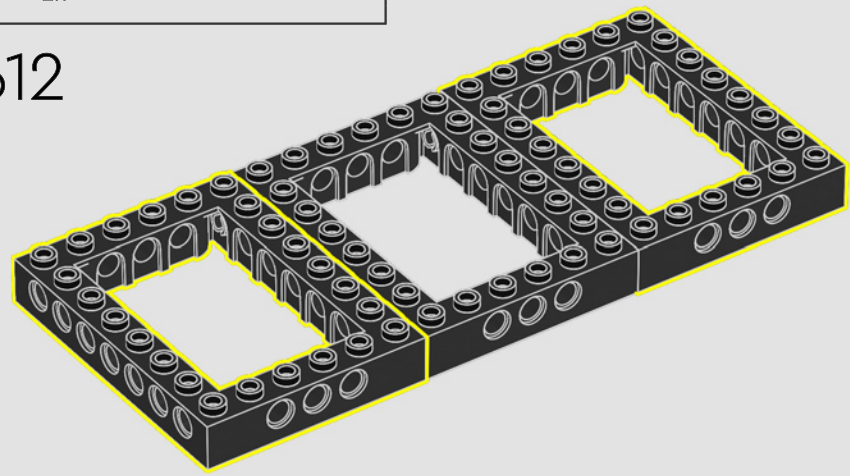

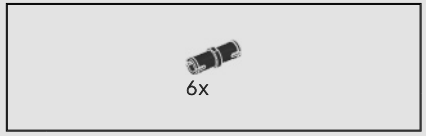

613

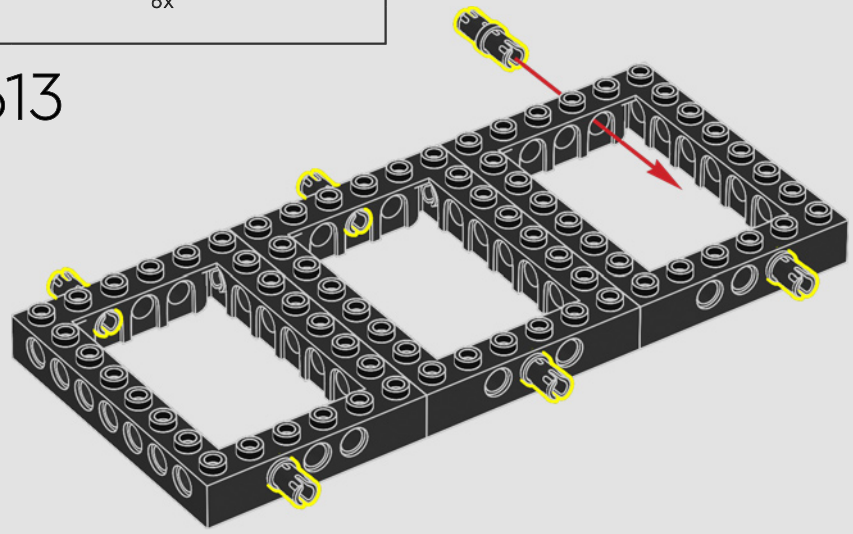

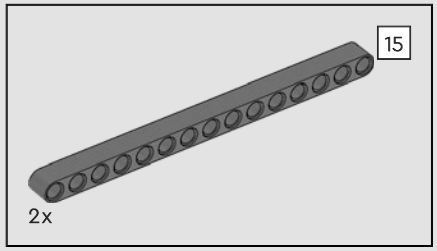

614

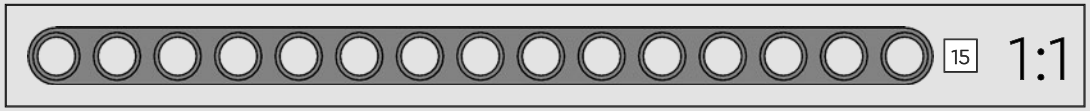

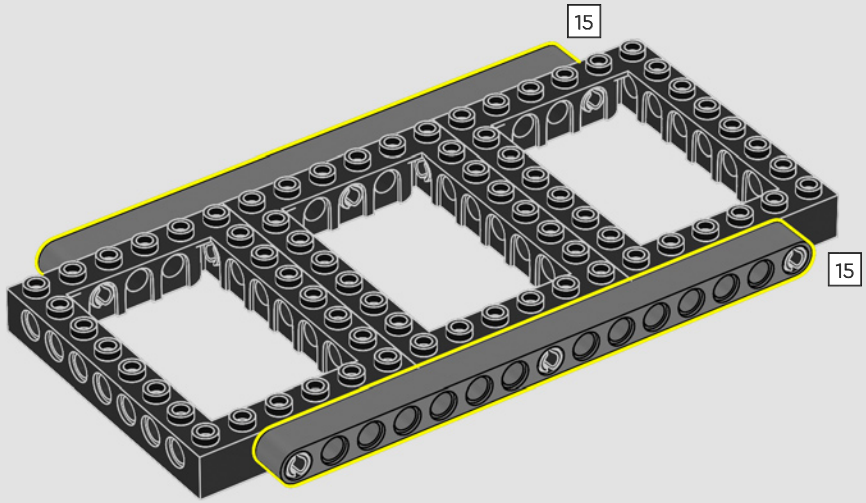

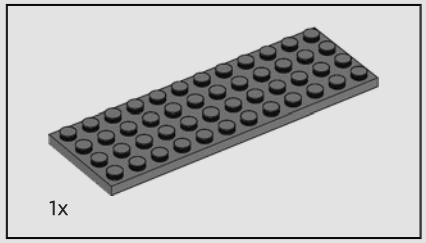

615

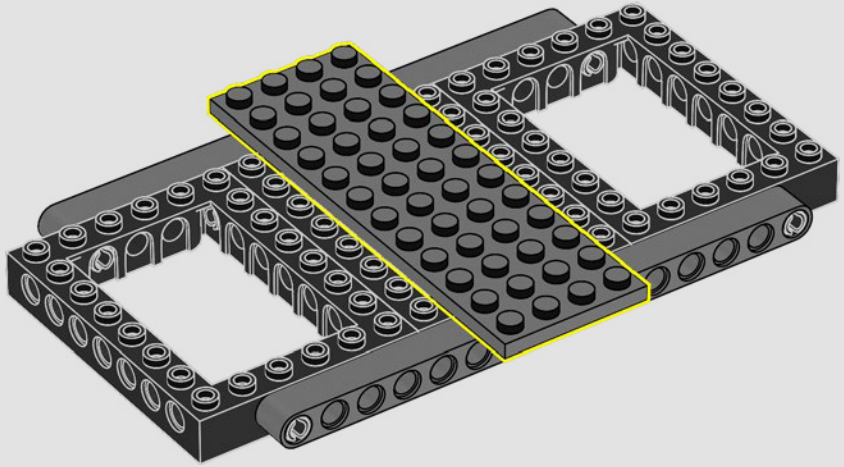

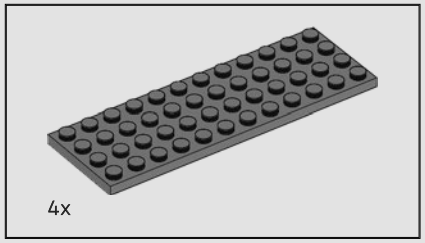

616

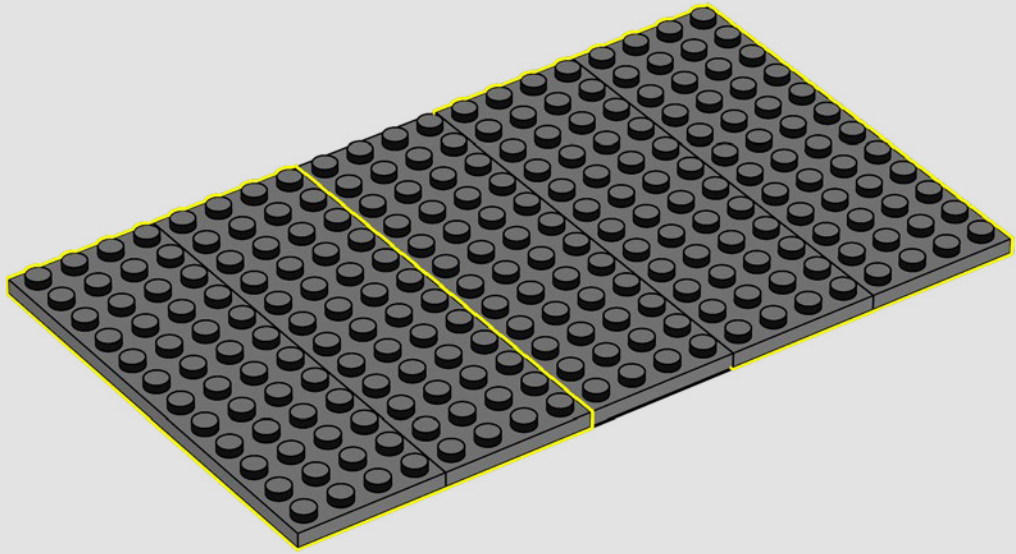

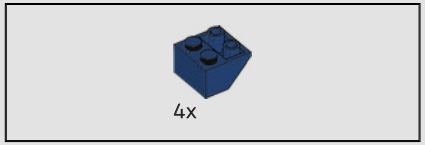

617

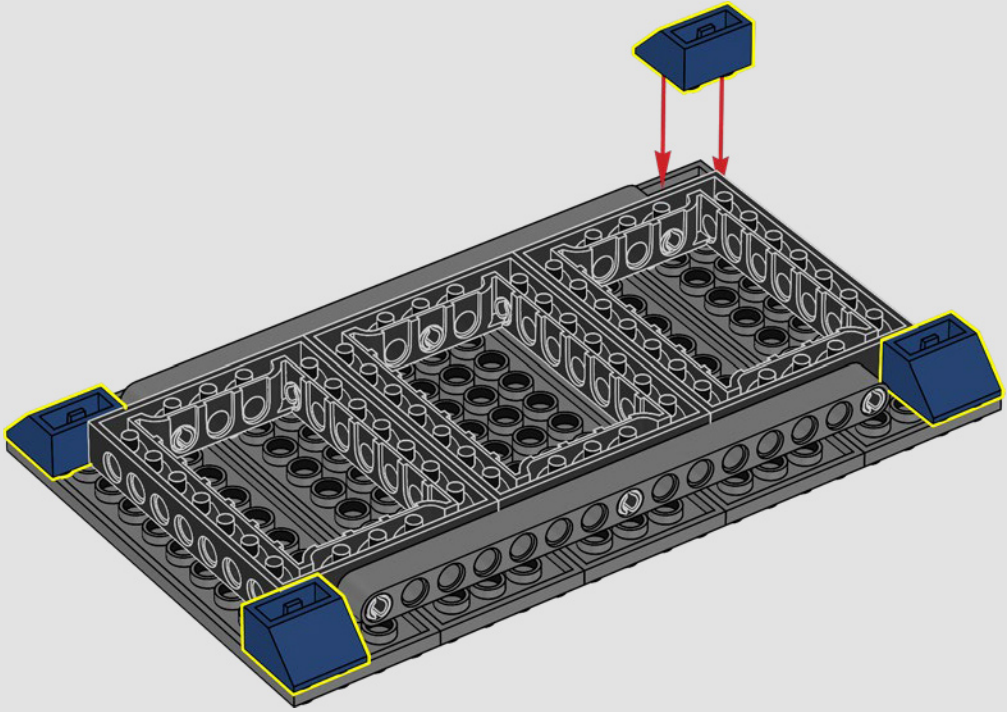

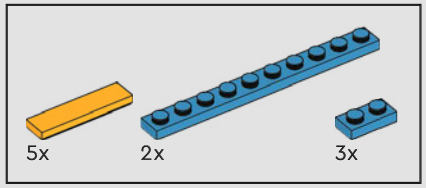

618

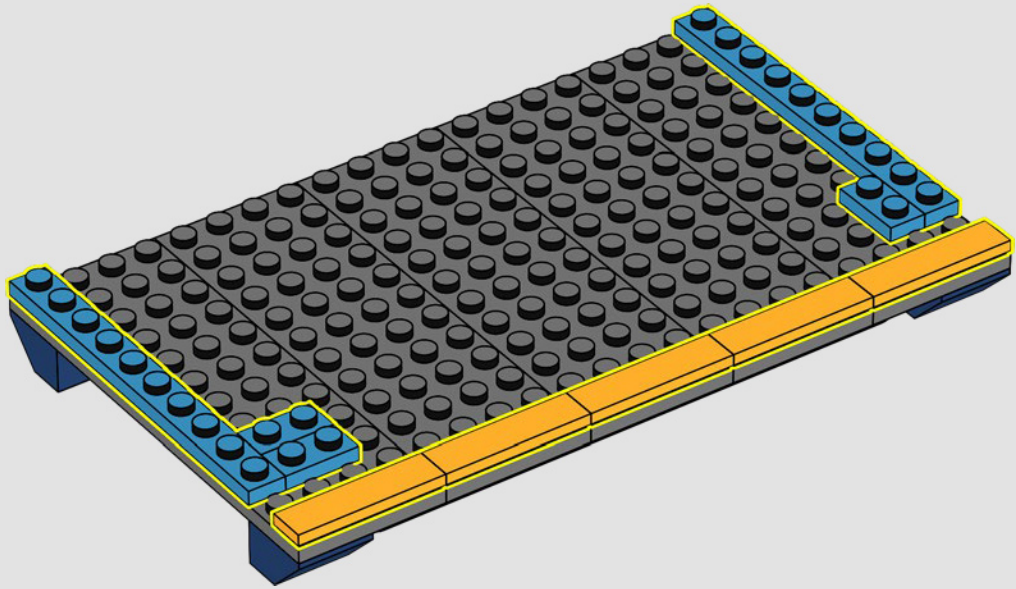

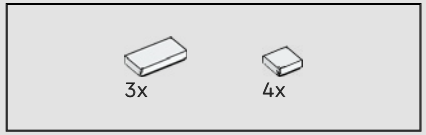

619

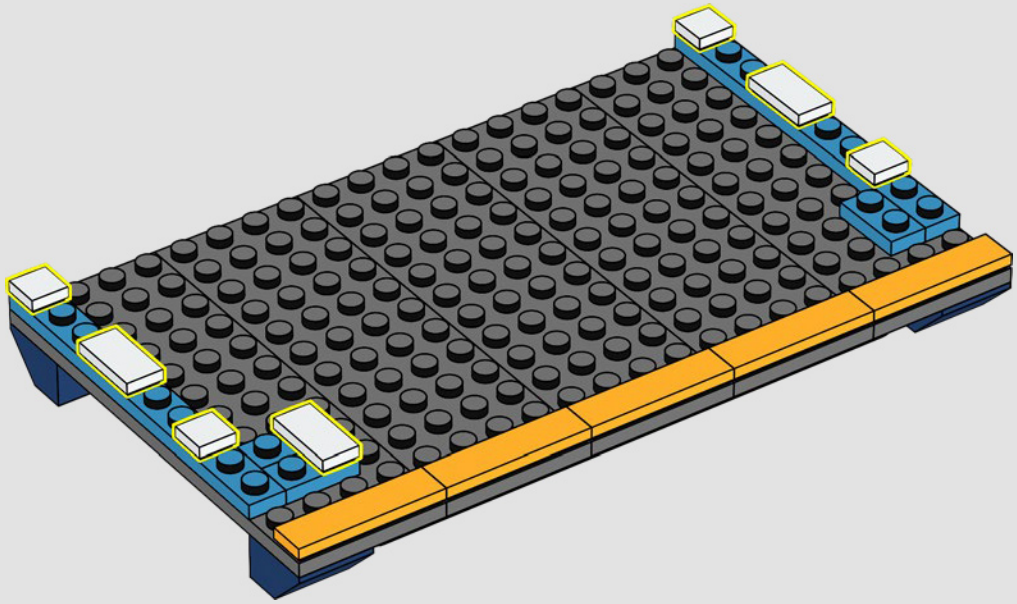

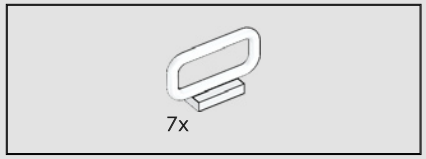

620

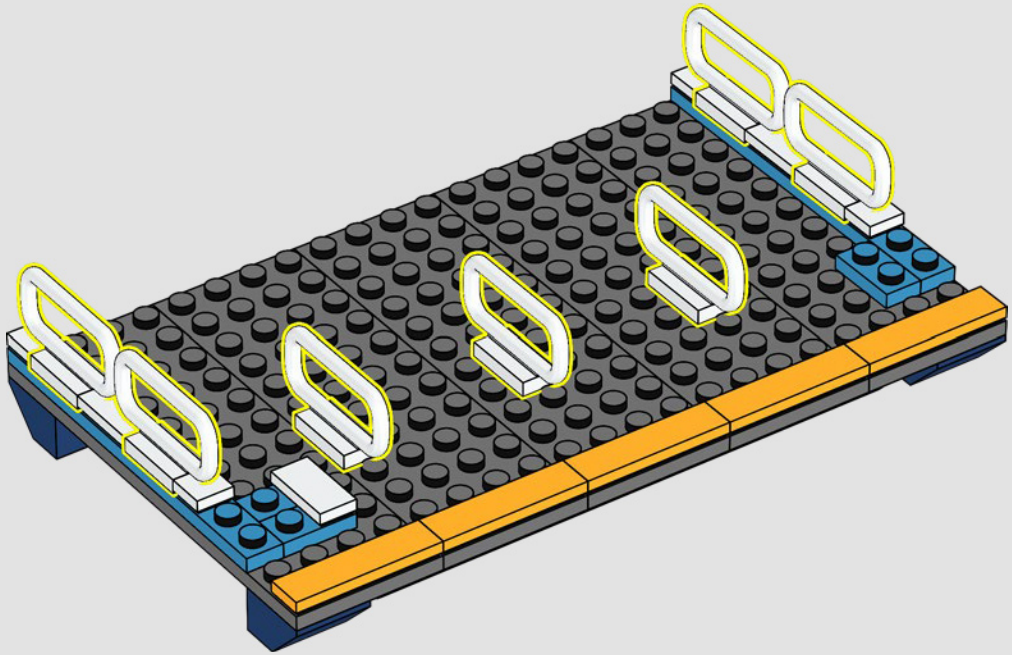

621

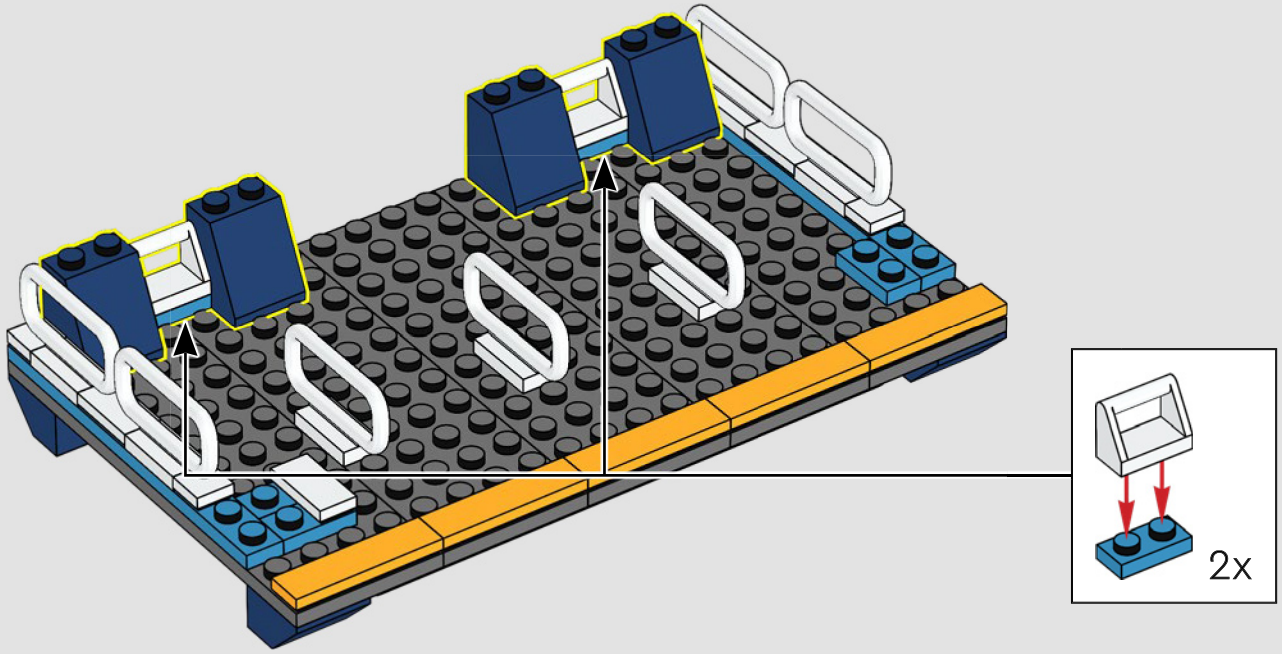

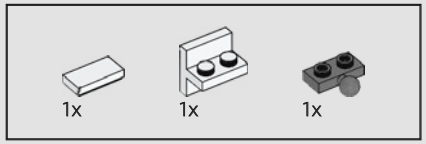

622

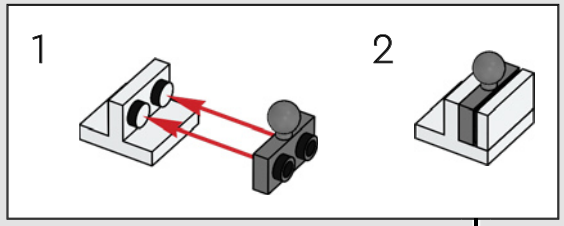

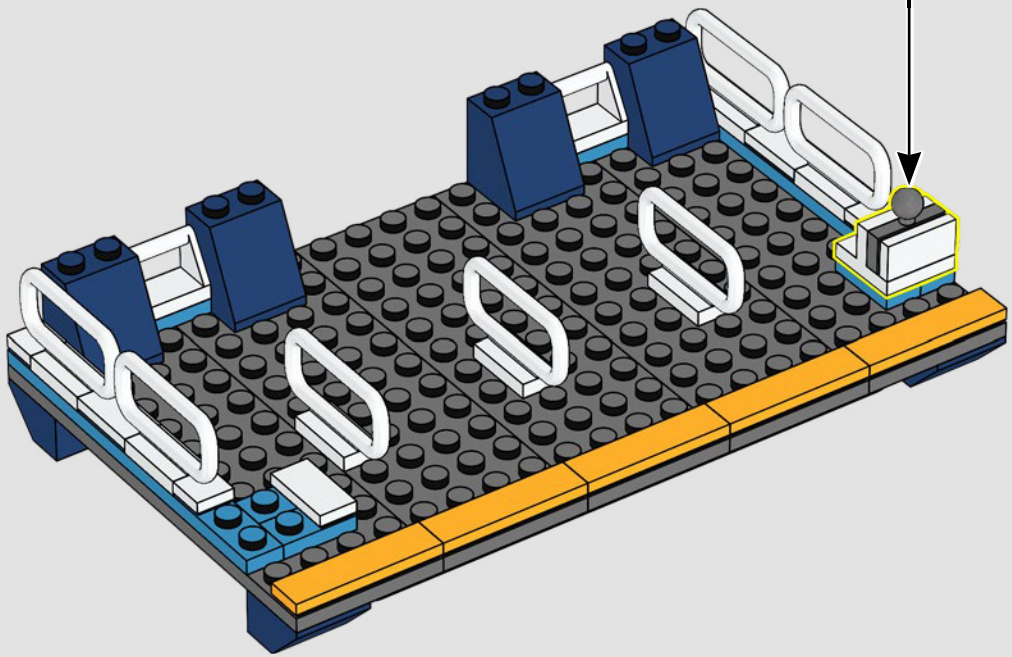

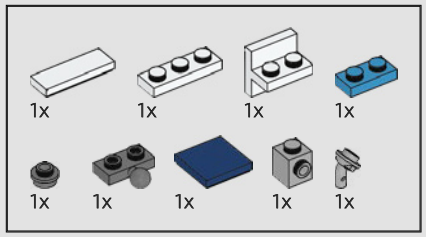

623

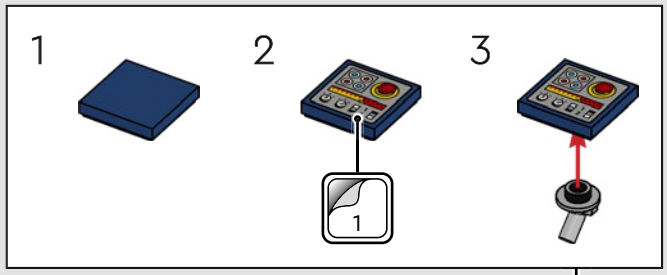

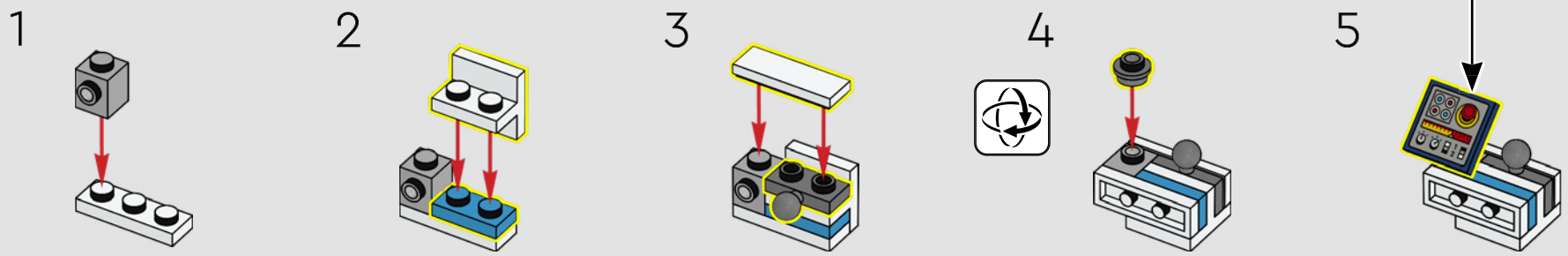

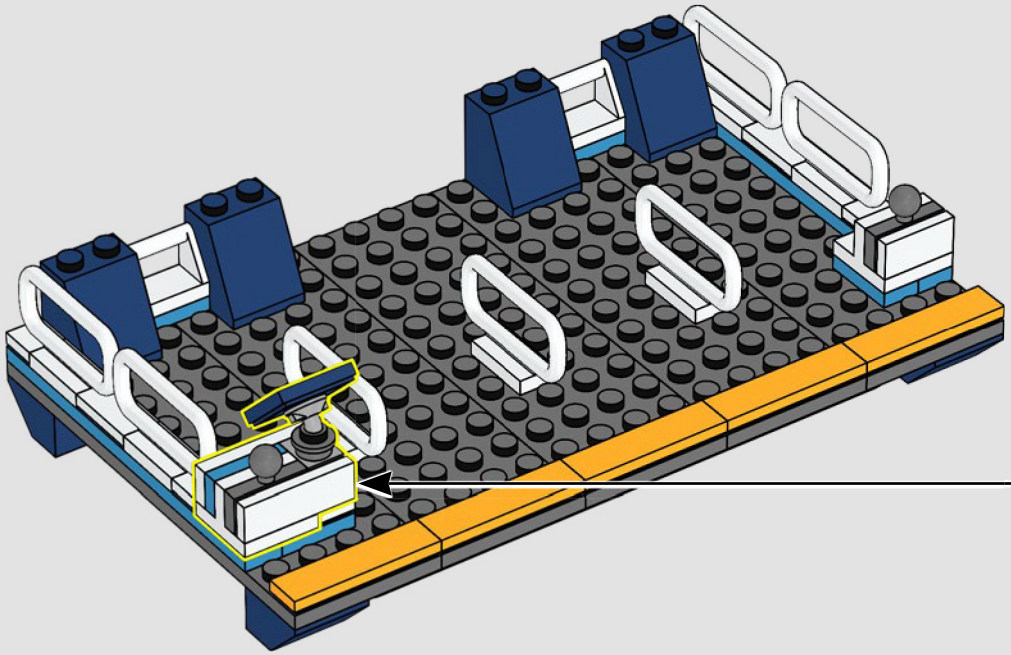

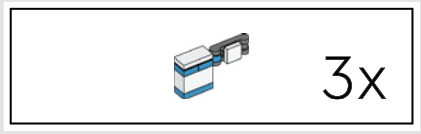

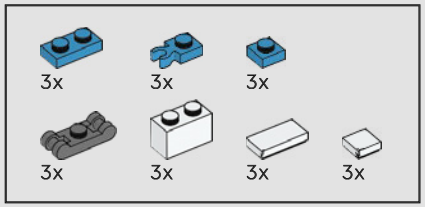

624

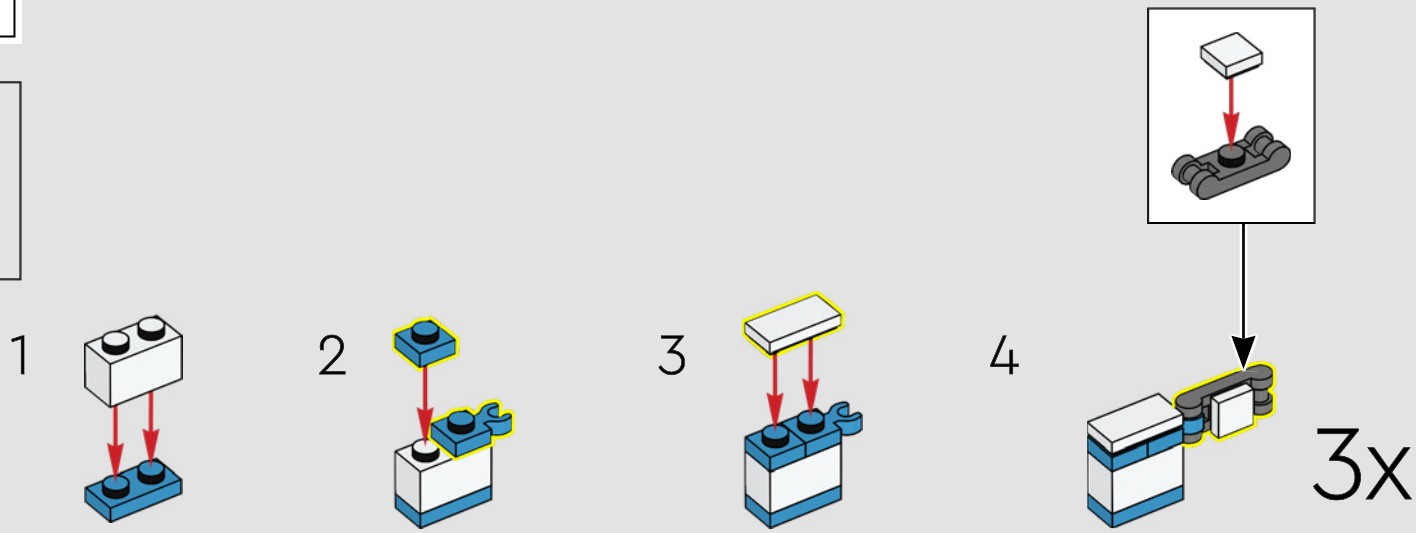

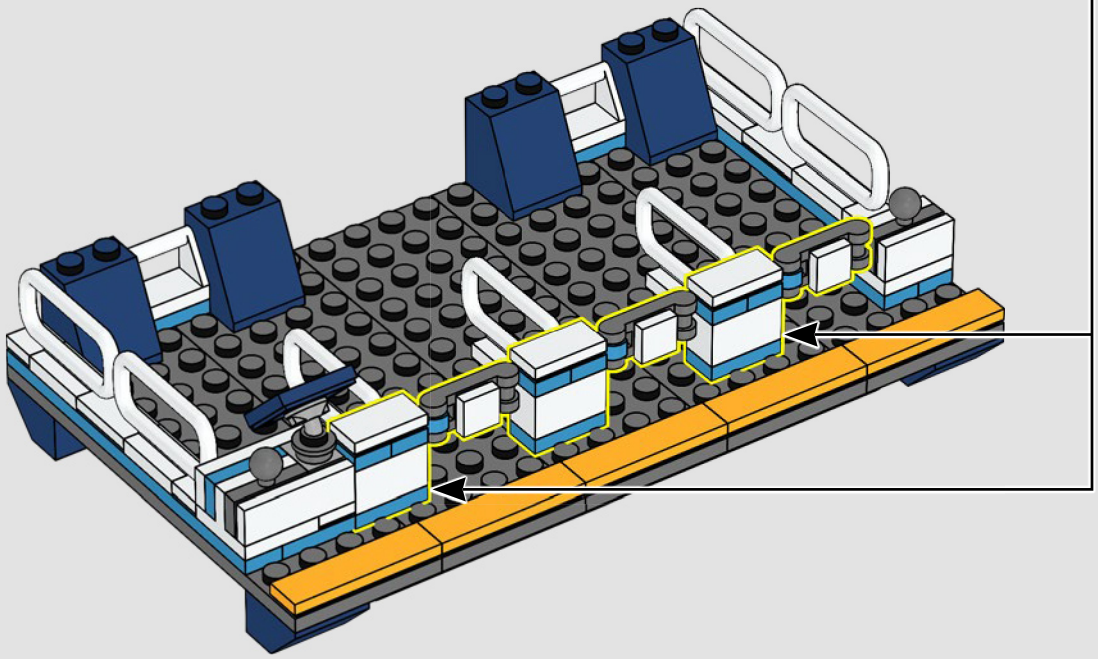

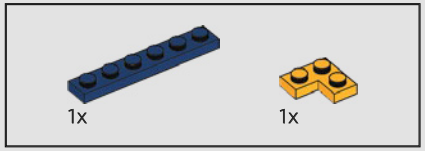

625

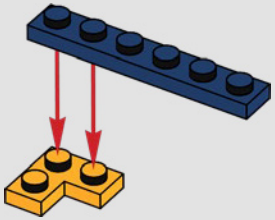

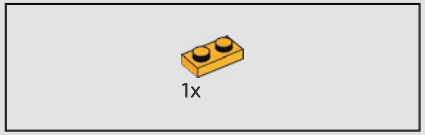

626

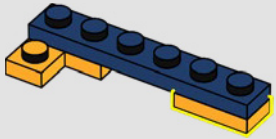

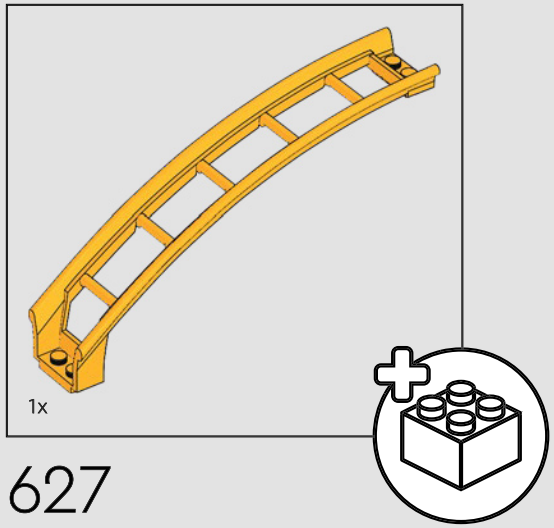

627

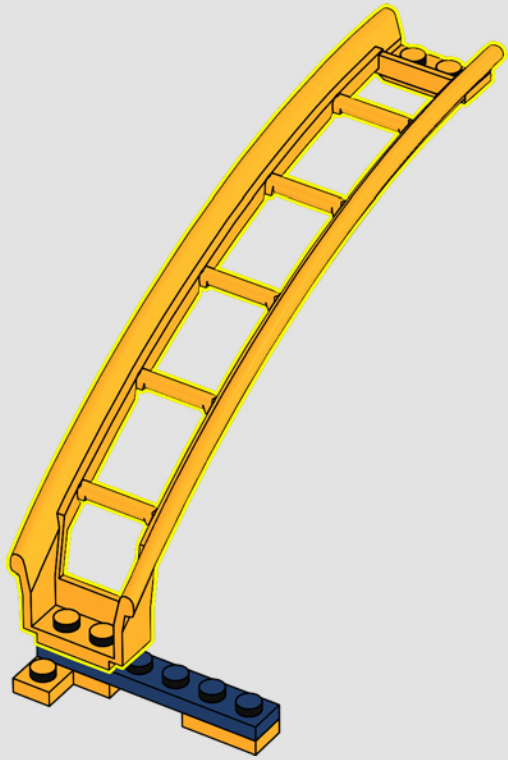

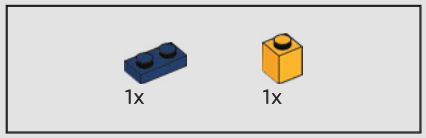

628

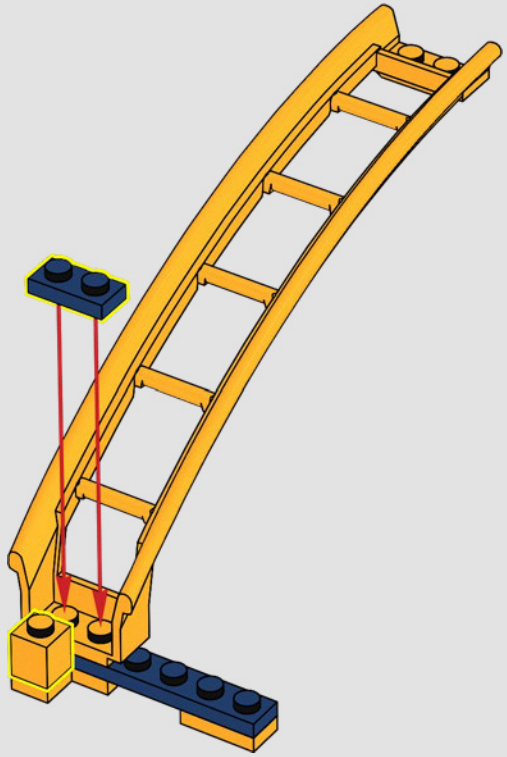

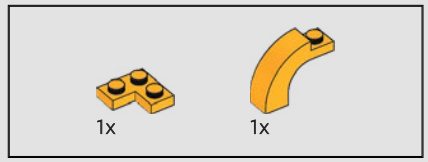

629

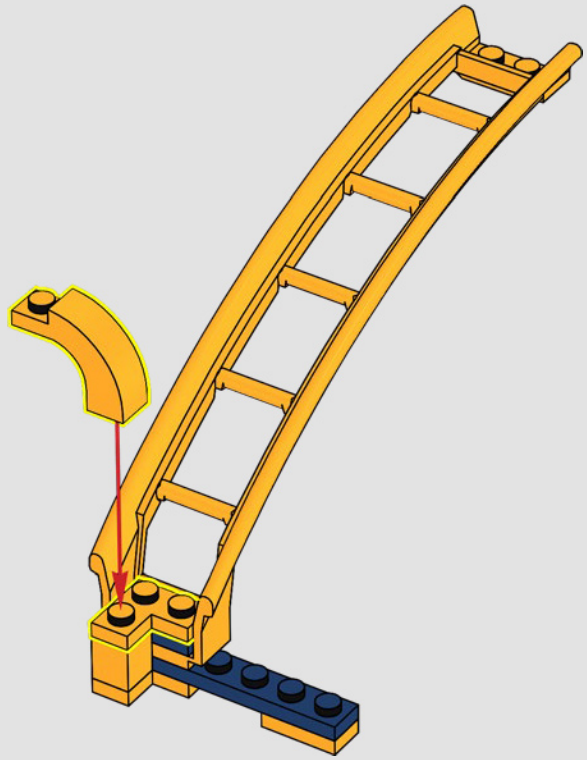

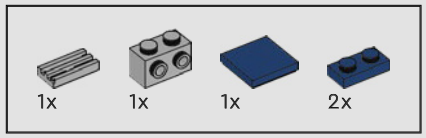

630

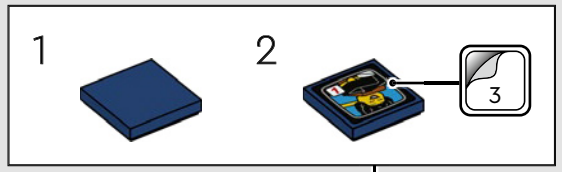

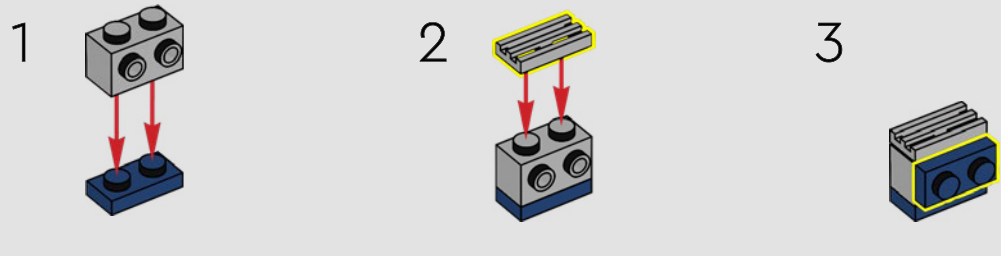

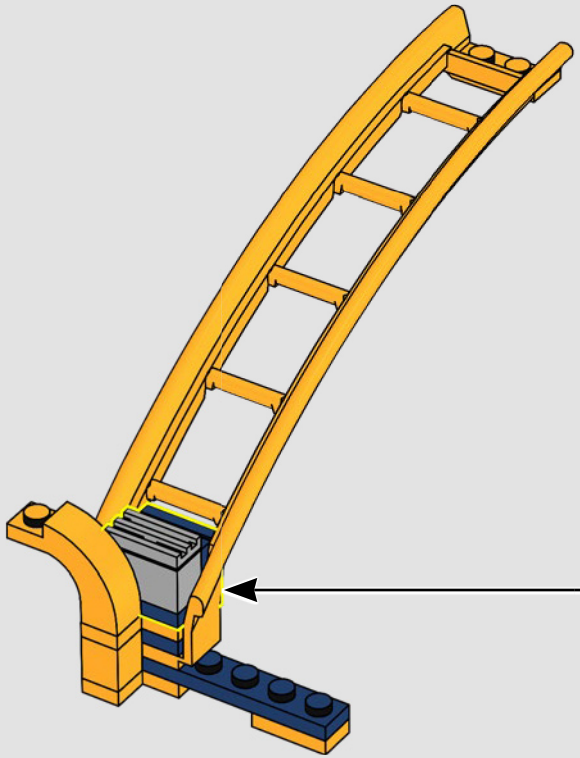

631

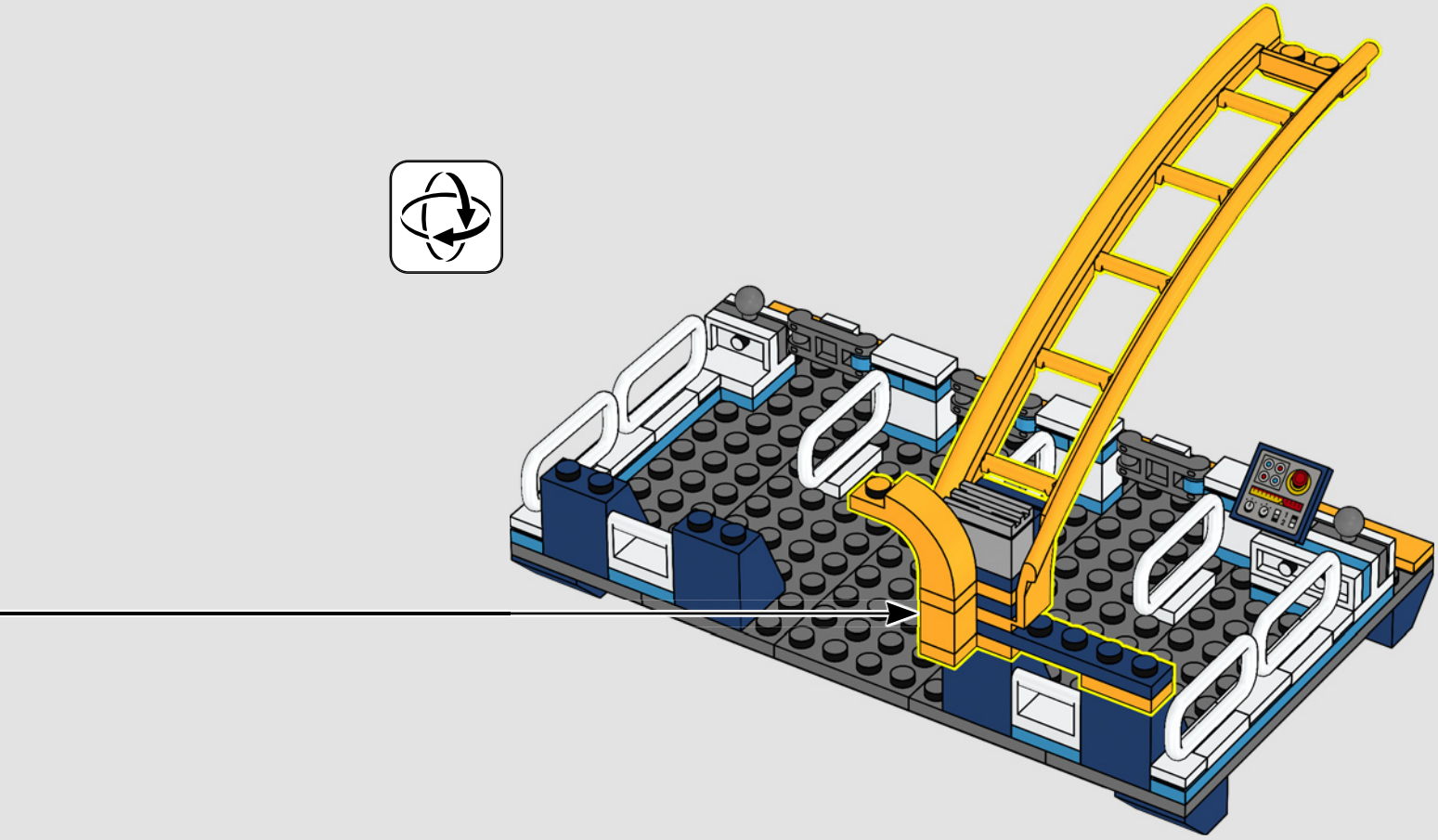

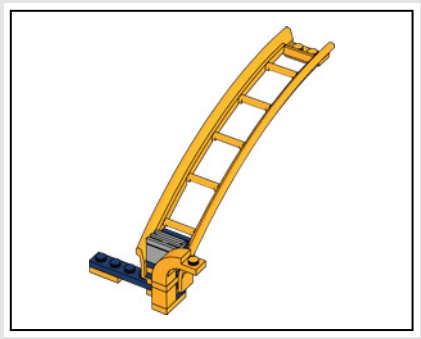

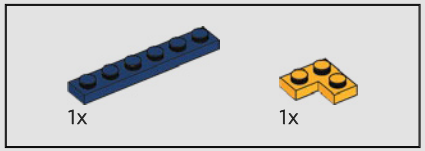

632

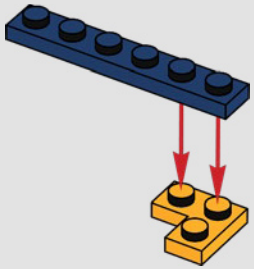

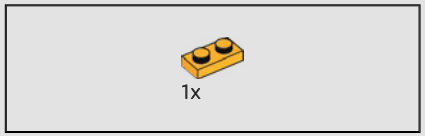

633

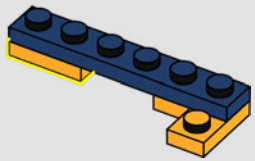

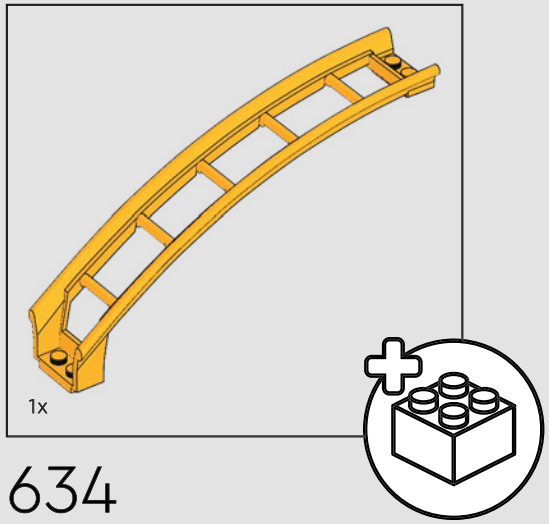

634

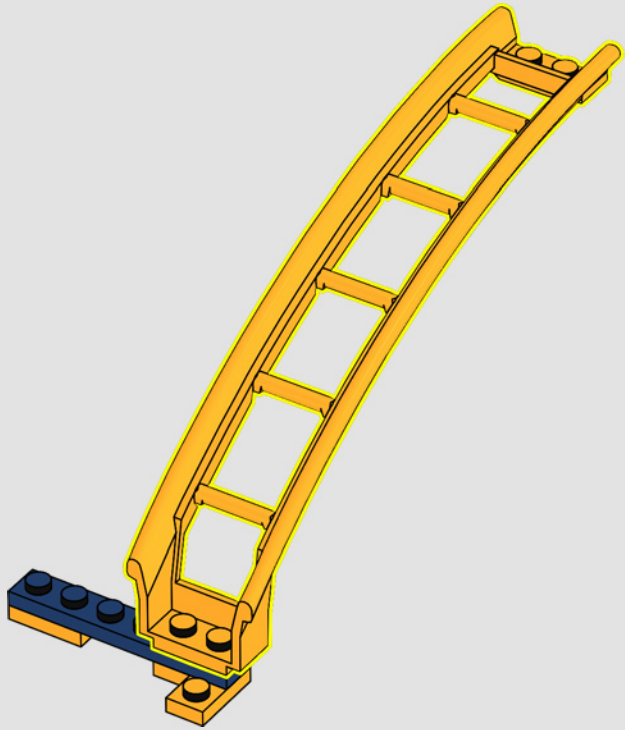

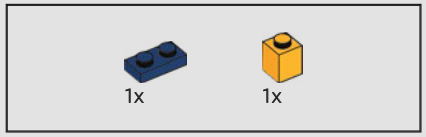

635

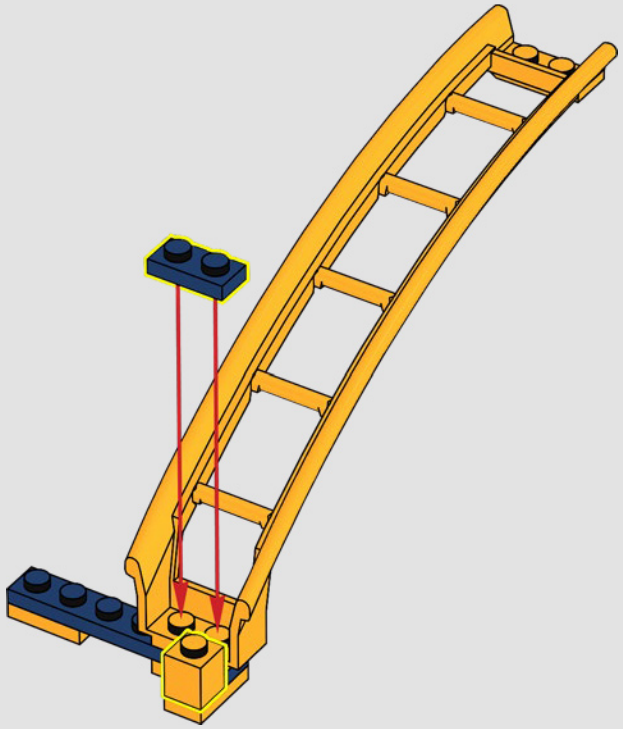

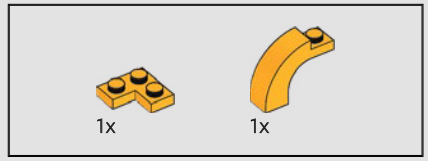

636

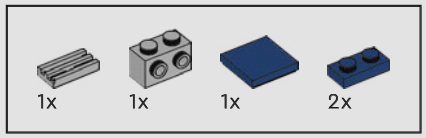

637

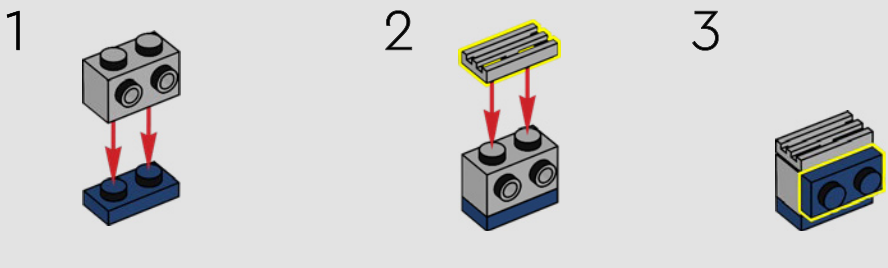

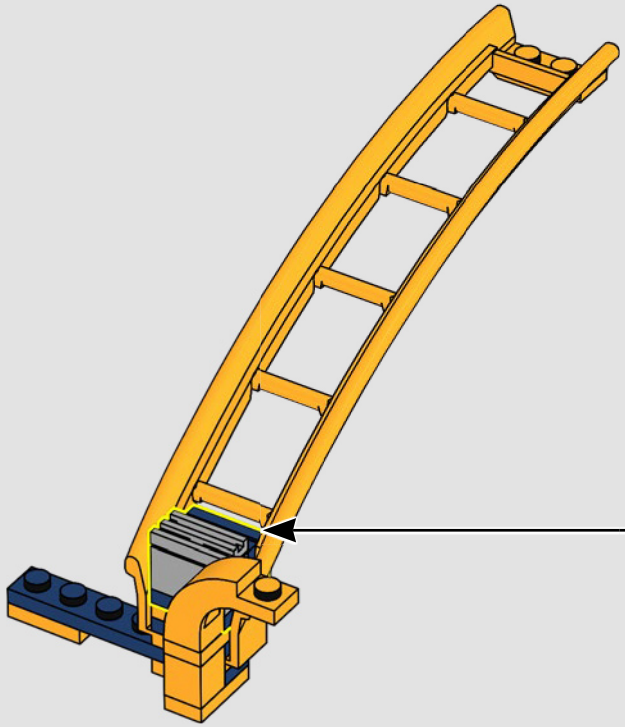

638

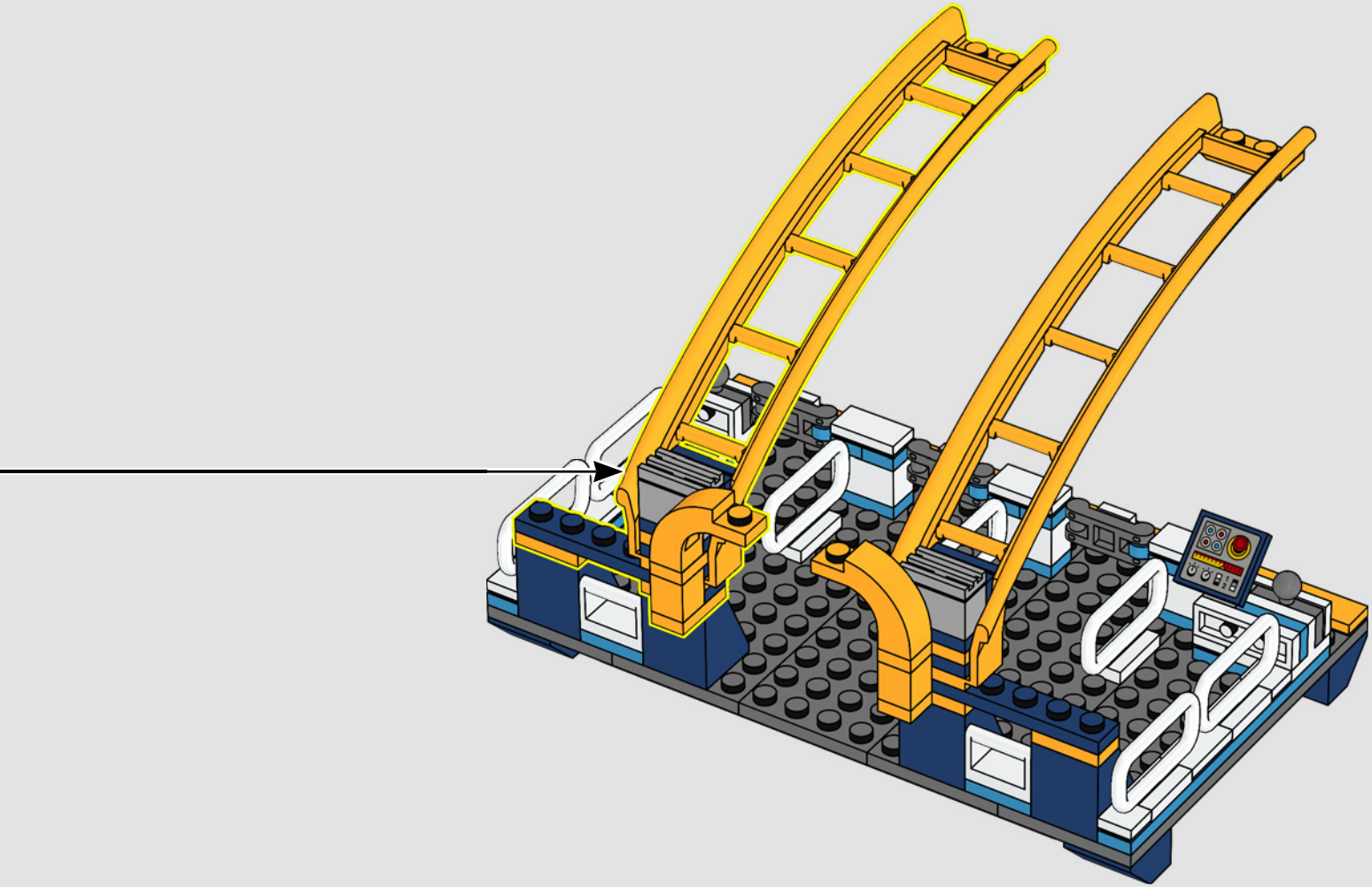

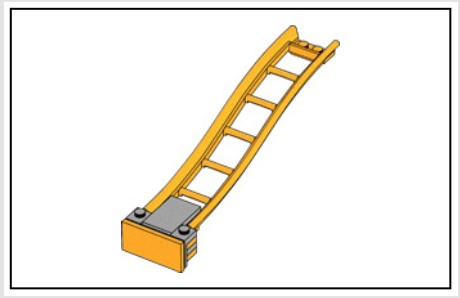

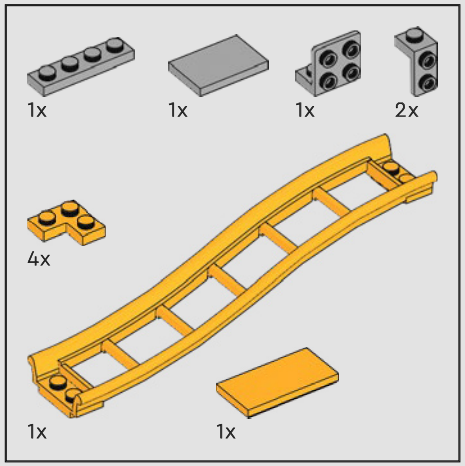

639

1

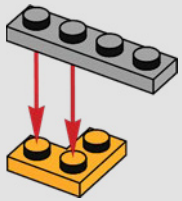

2

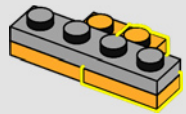

3

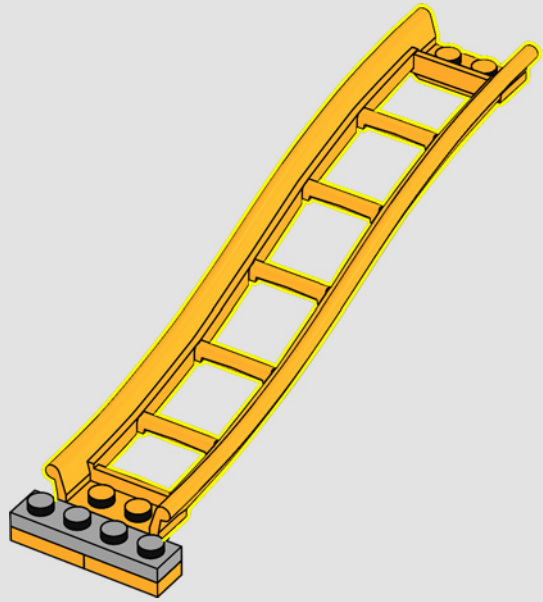

4

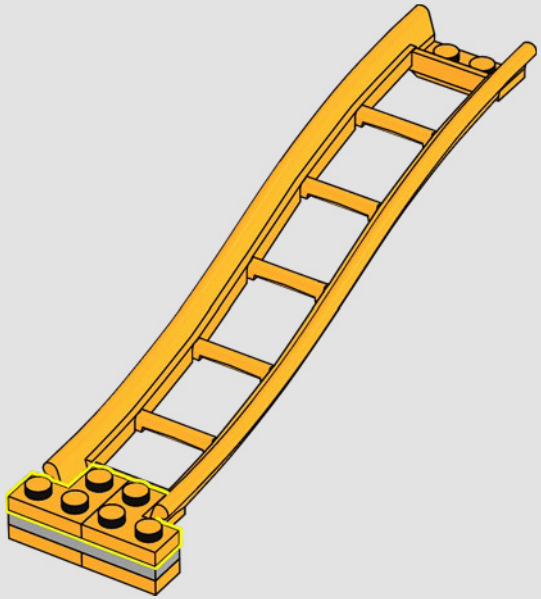

5

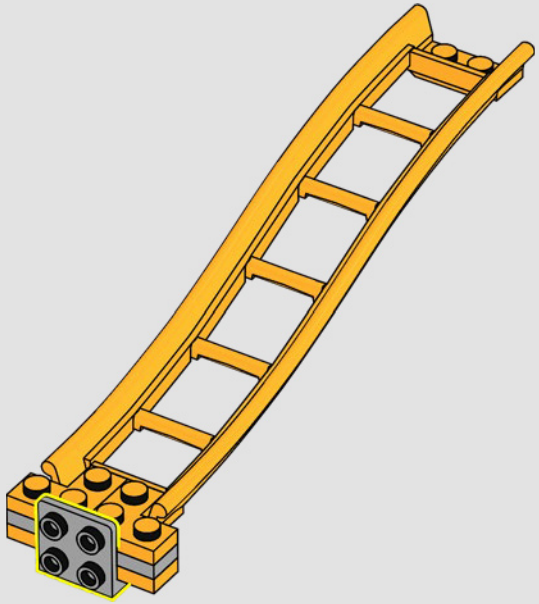

6

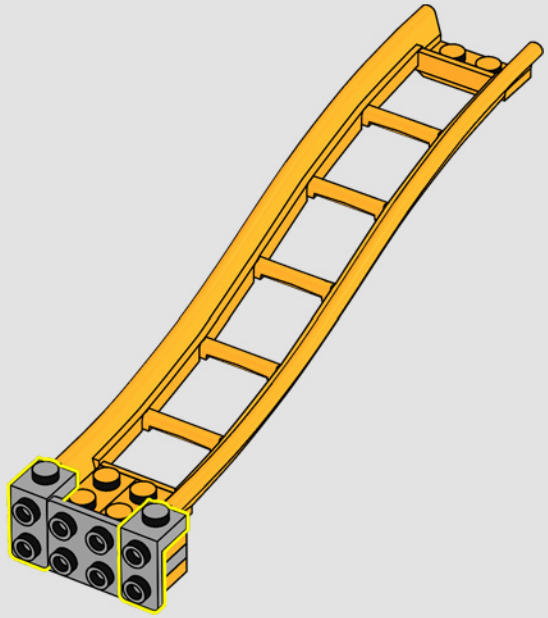

7

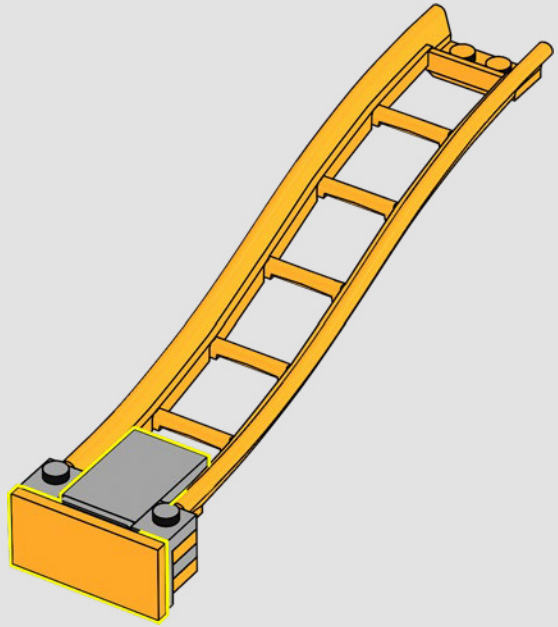

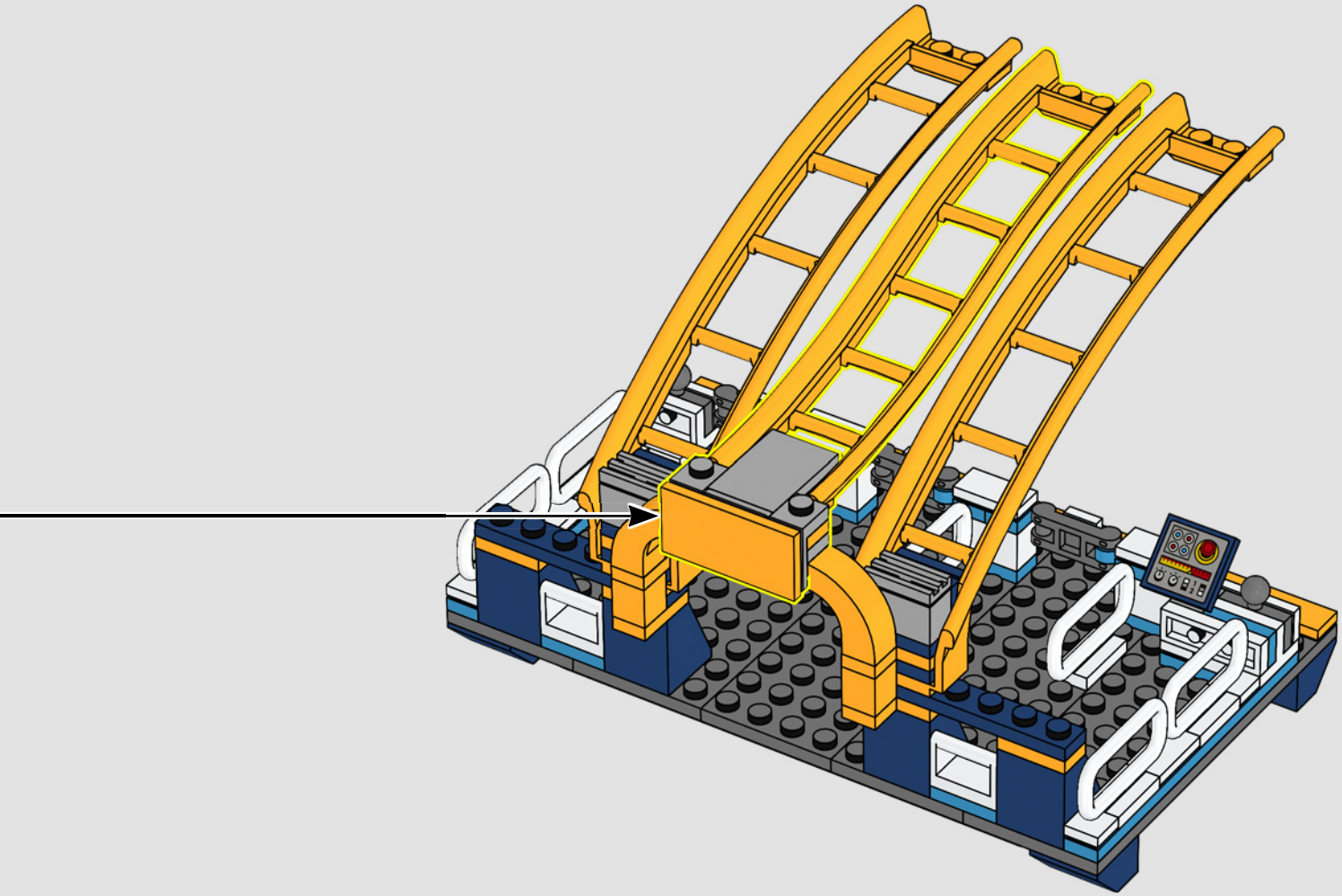

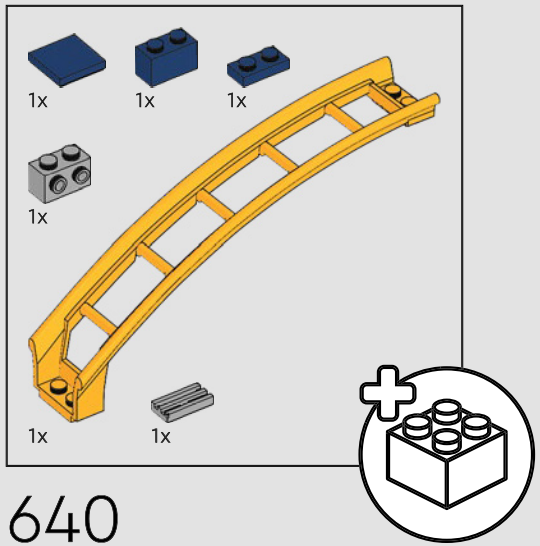

640

1

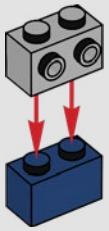

2

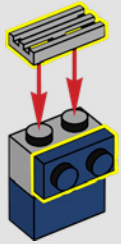

3

4

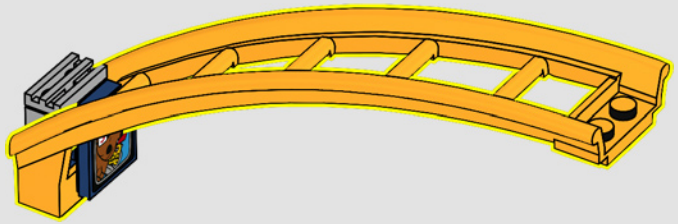

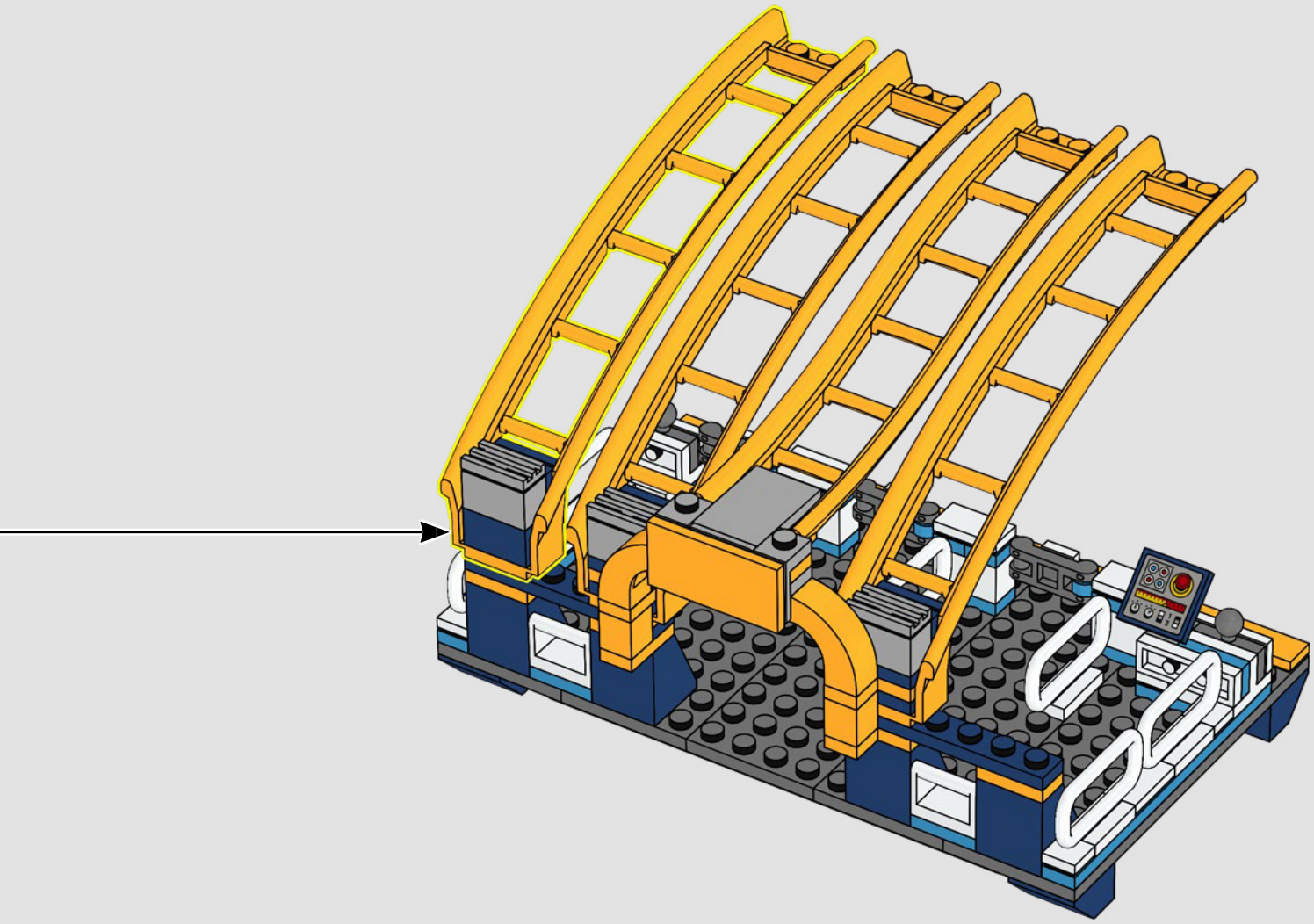

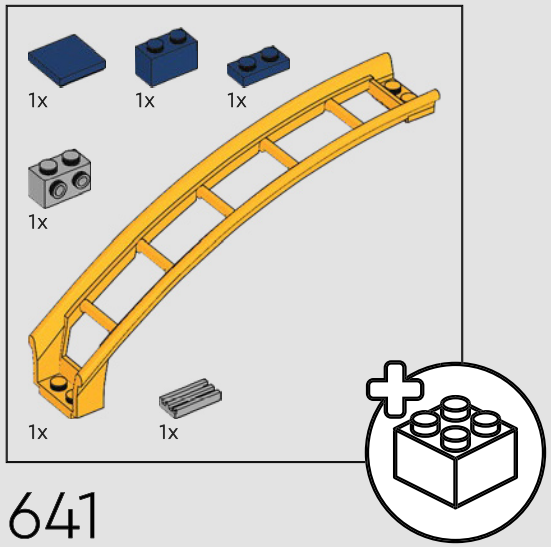

641

1

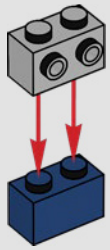

2

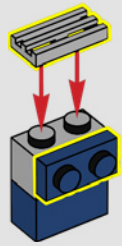

3

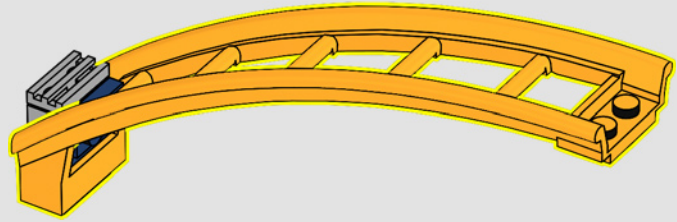

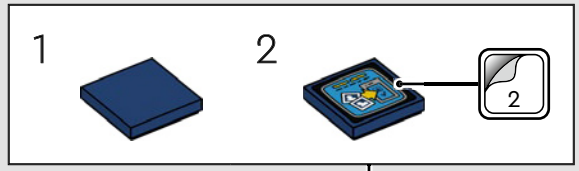

4

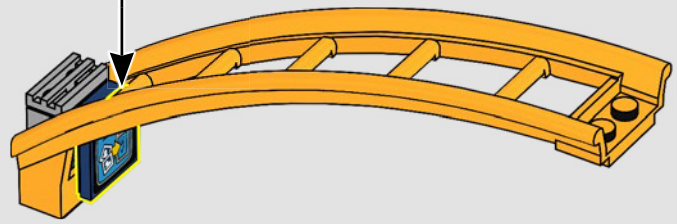

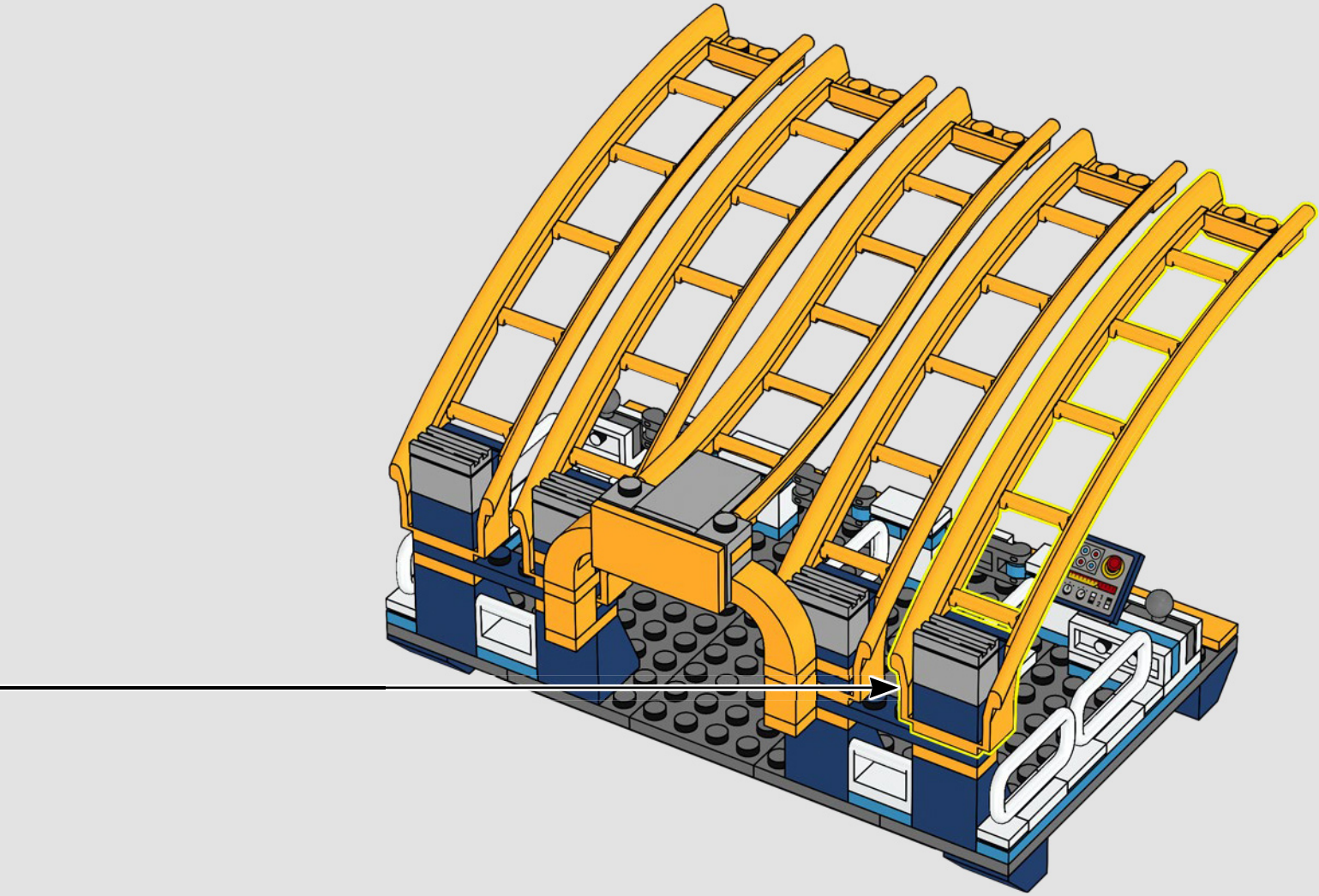

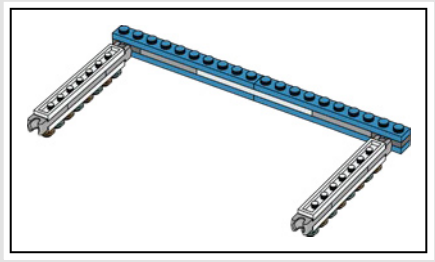

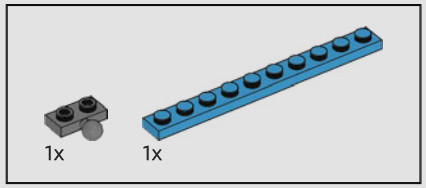

642

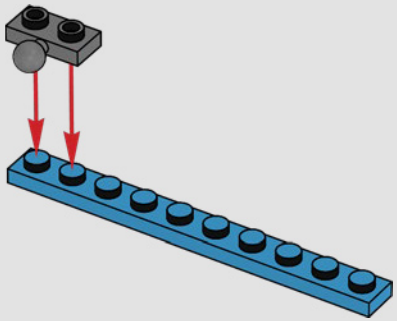

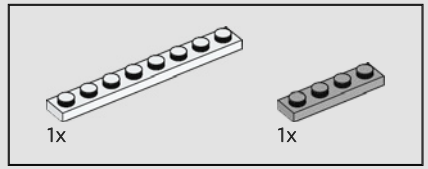

643

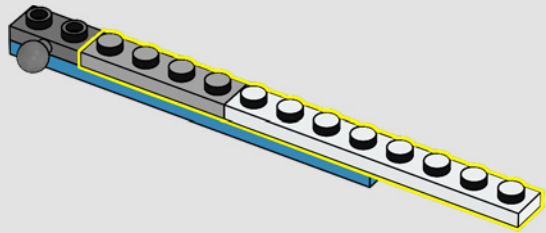

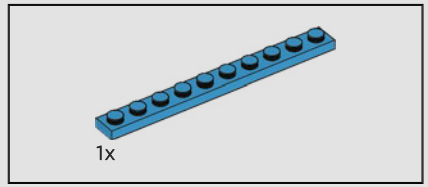

644

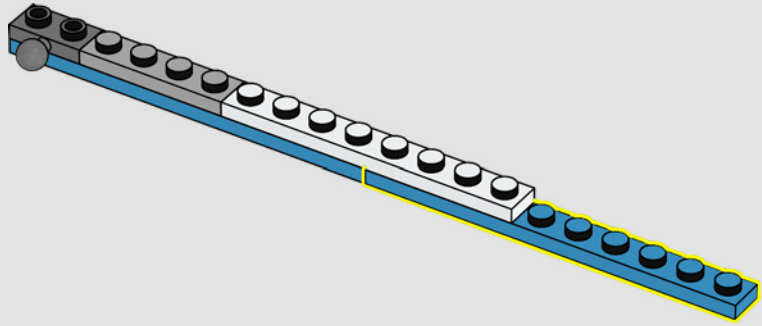

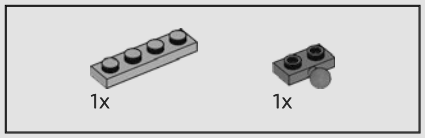

645

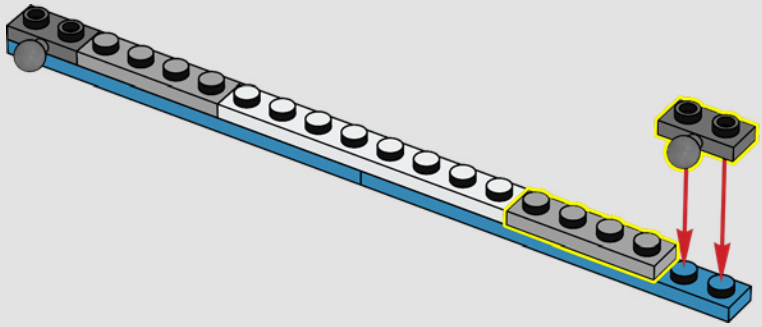

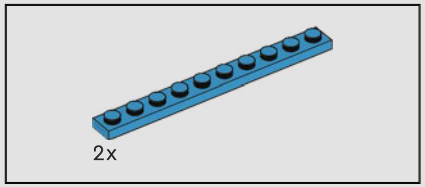

646

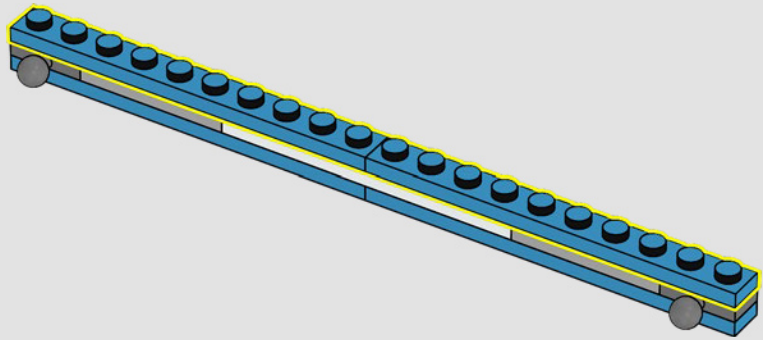

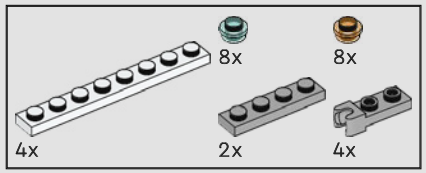

647

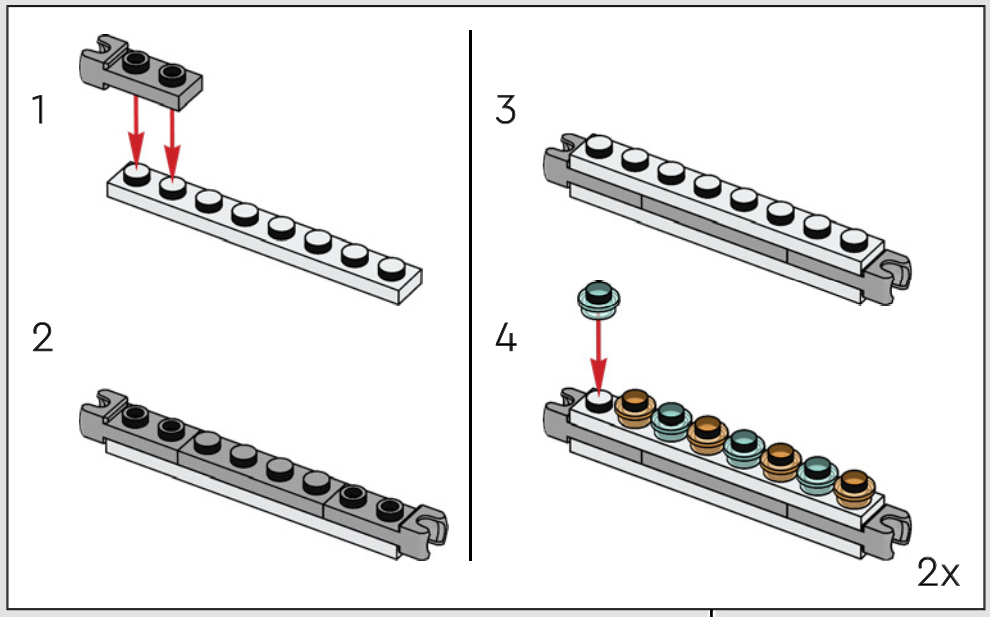

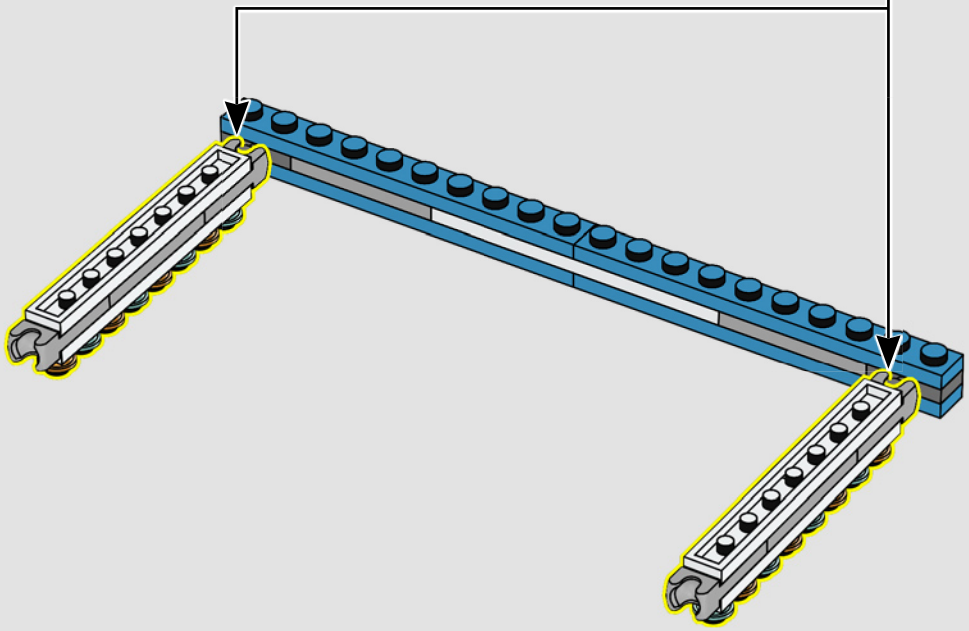

648

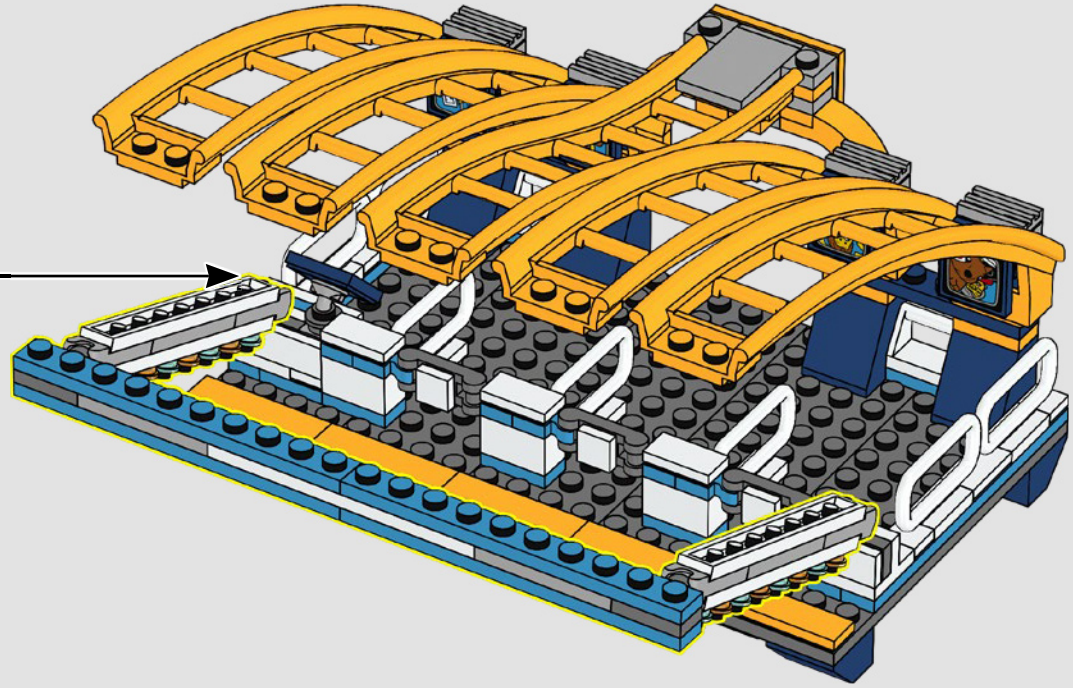

649

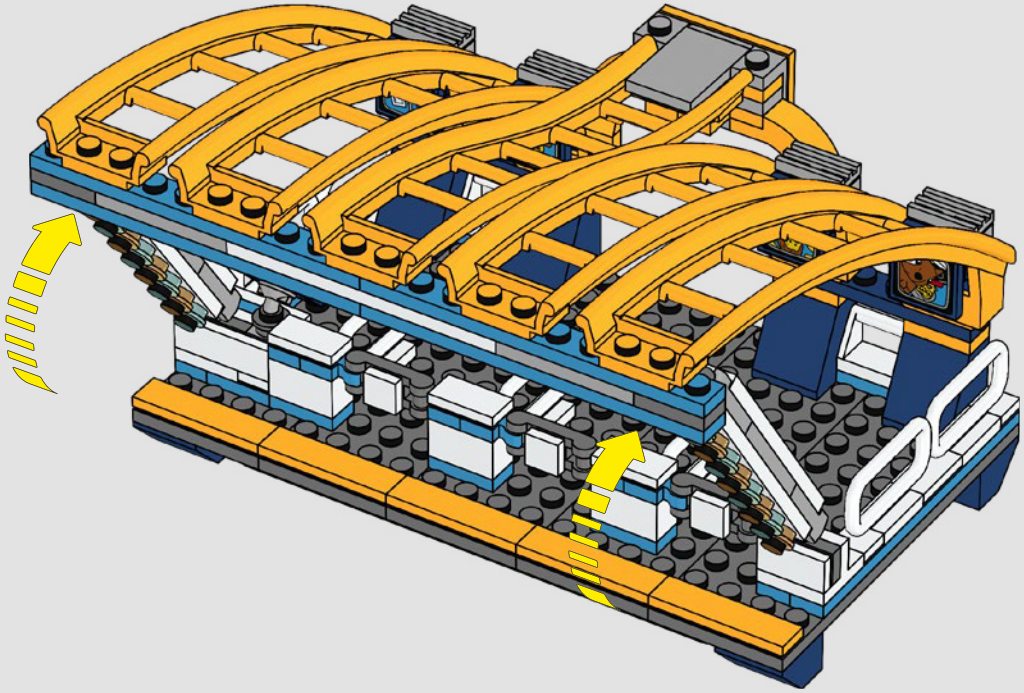

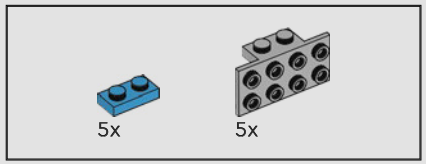

650

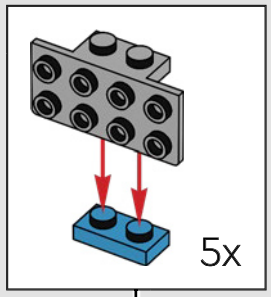

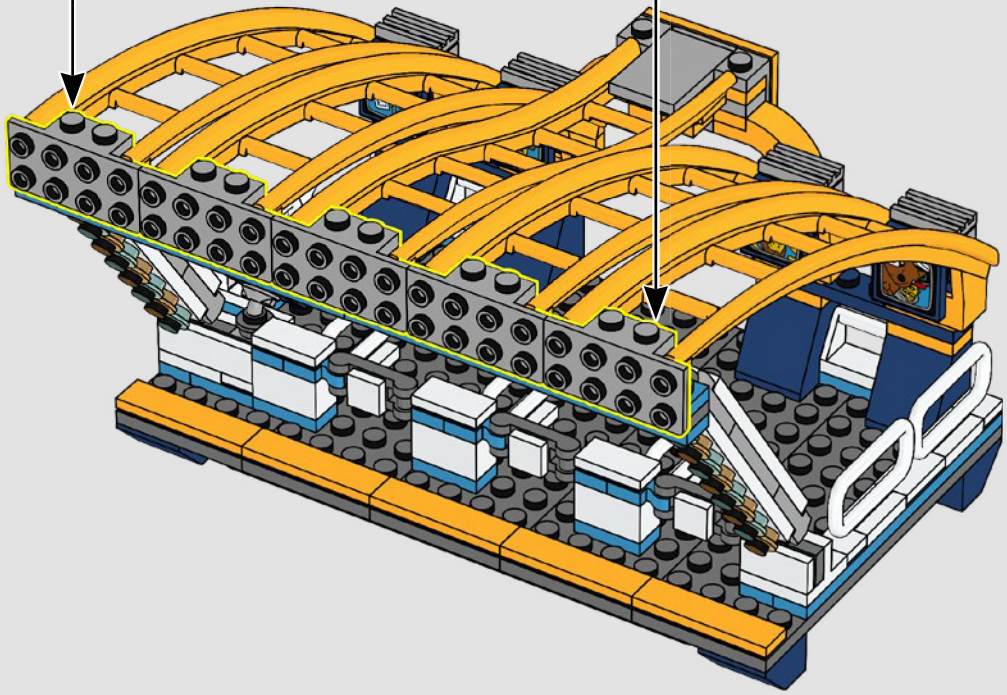

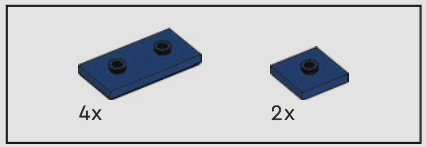

651

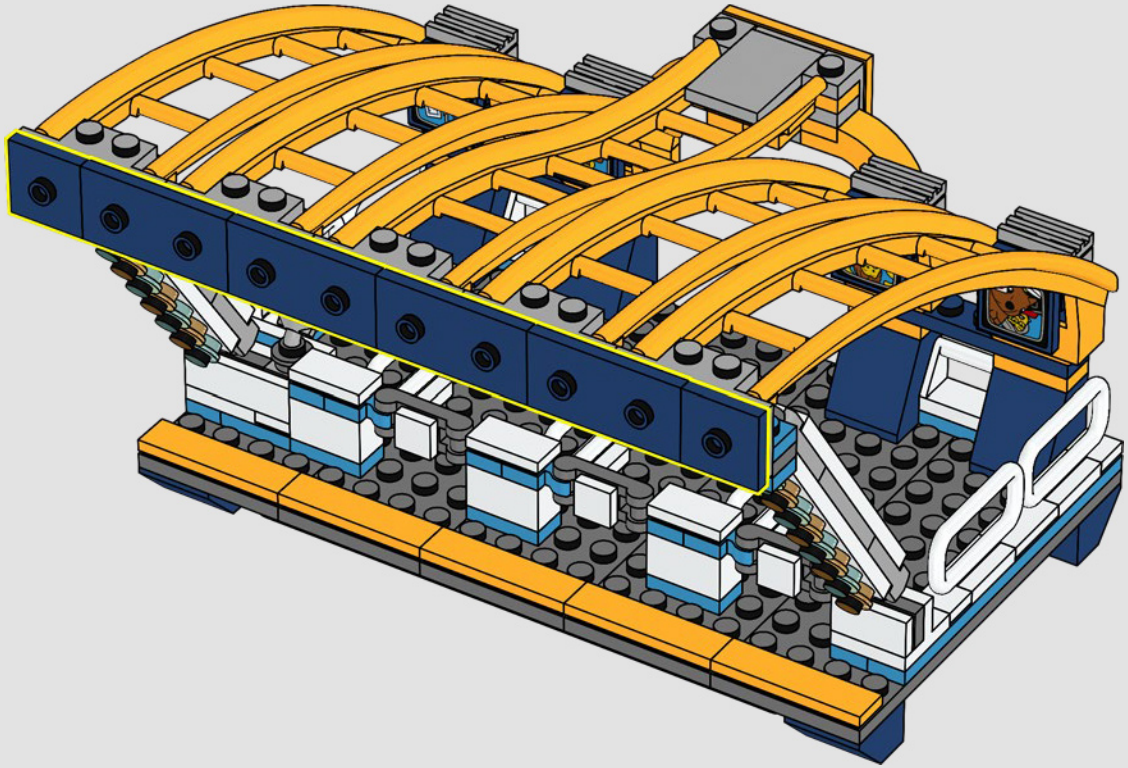

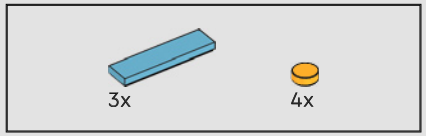

652

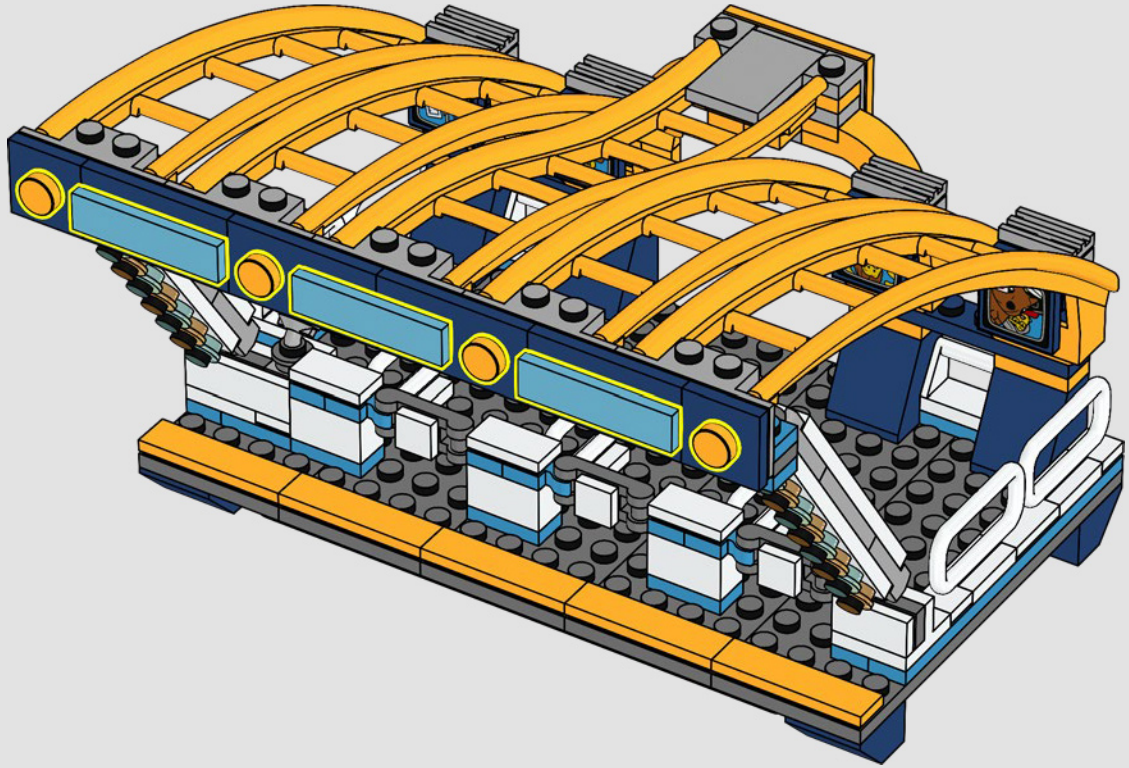

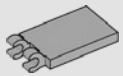

653

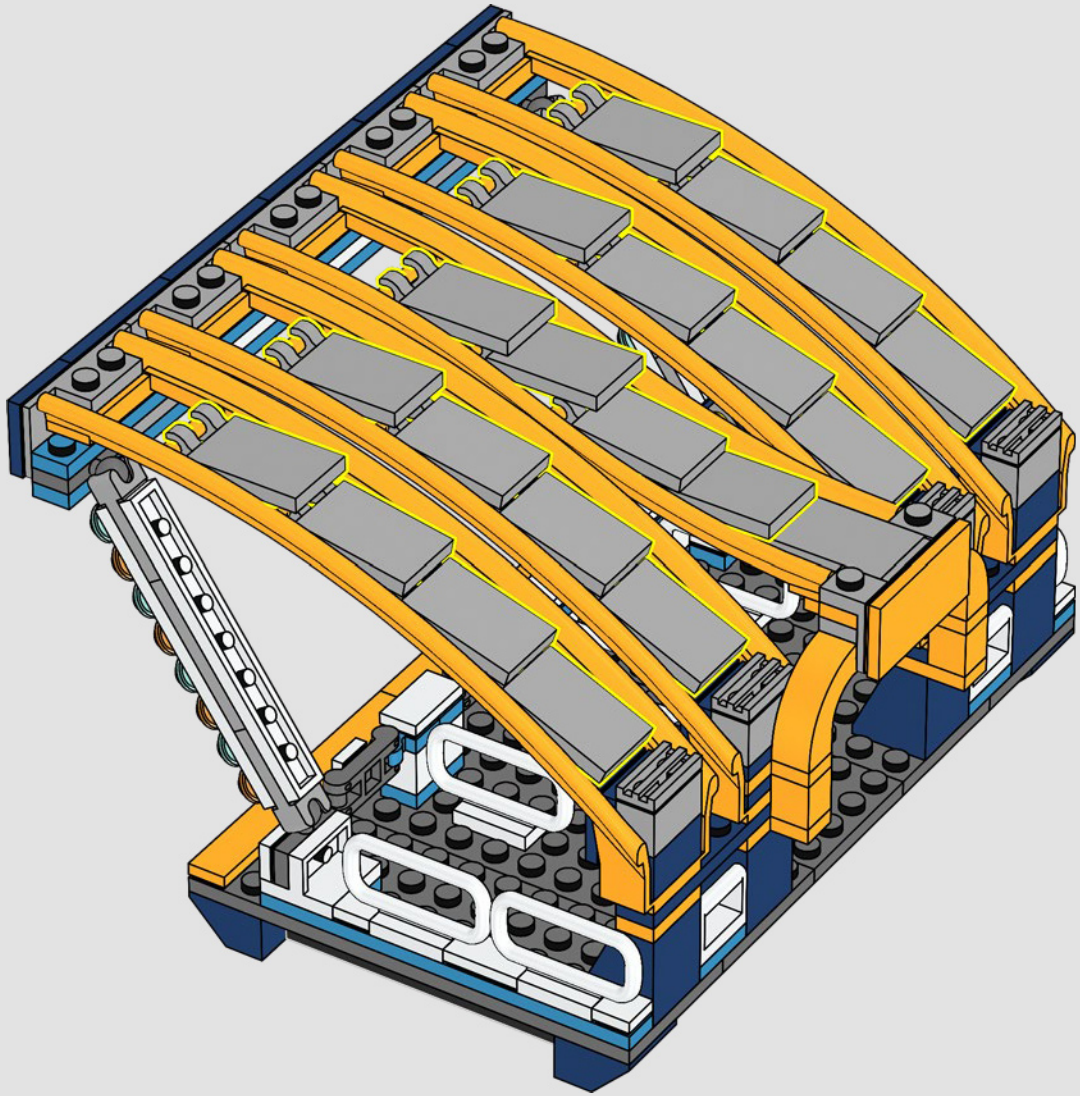

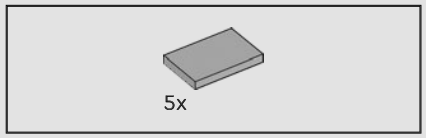

654

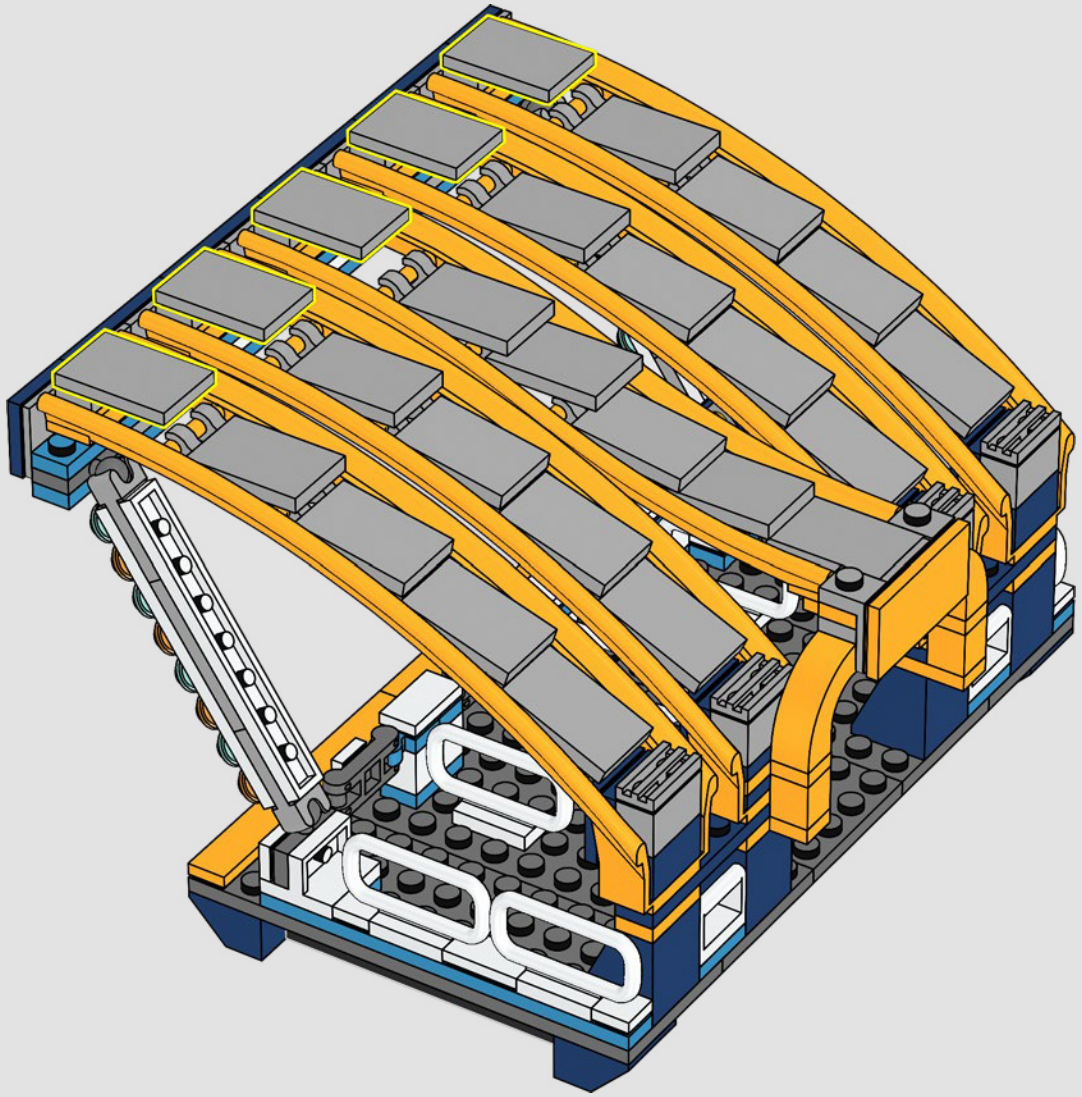

655

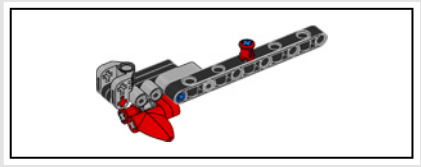

656

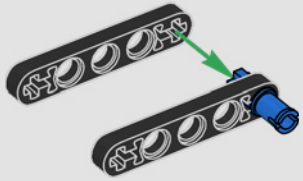

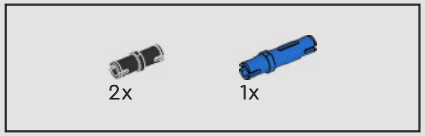

657

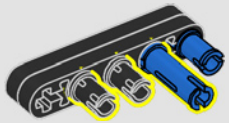

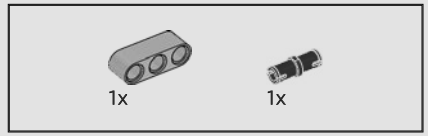

658

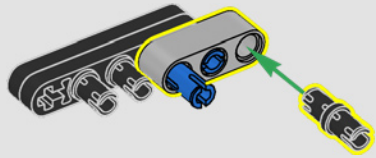

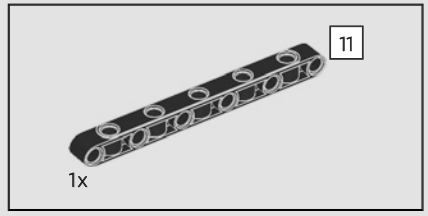

659

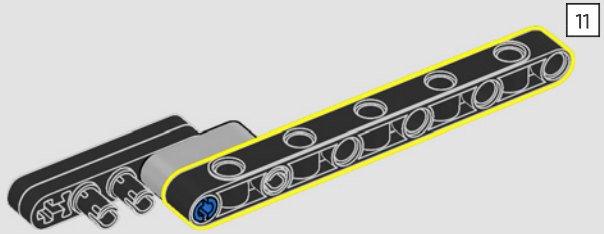

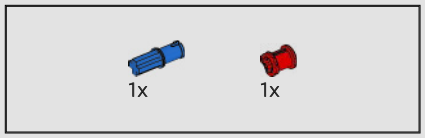

660

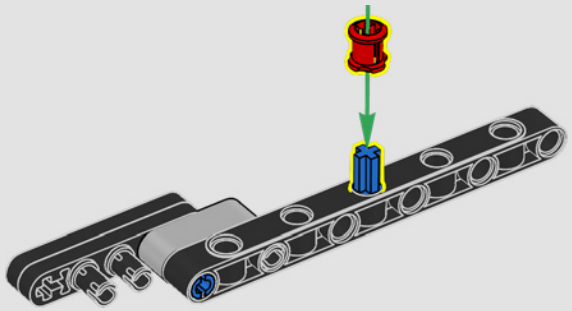

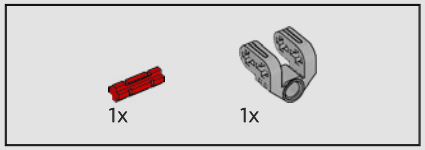

661

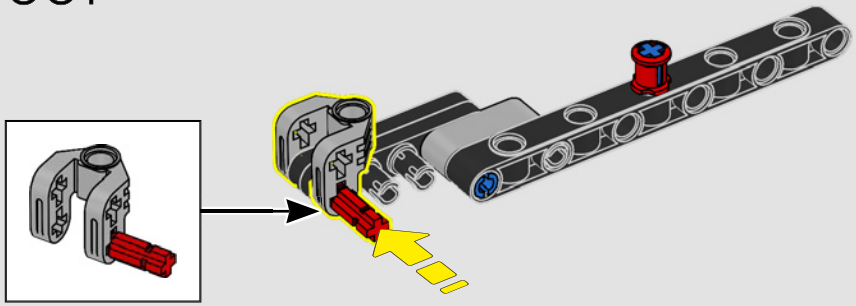

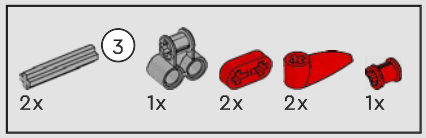

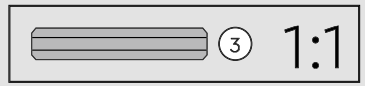

662

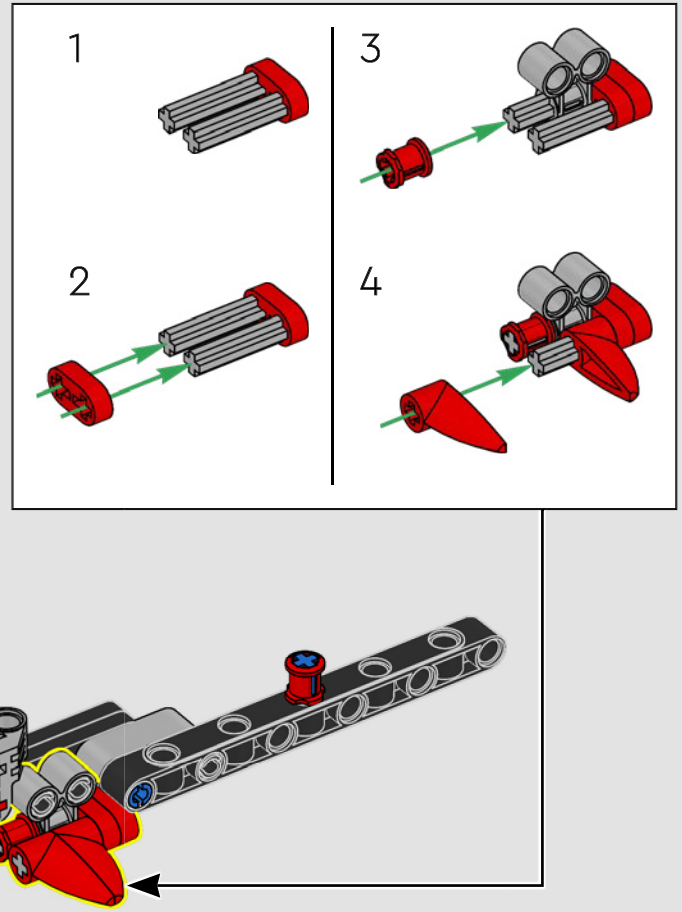

663

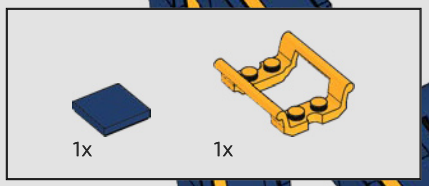

664

665

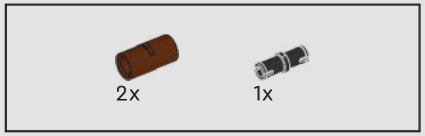

666

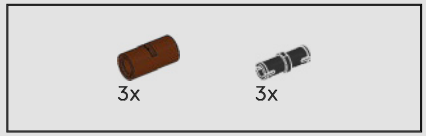

667

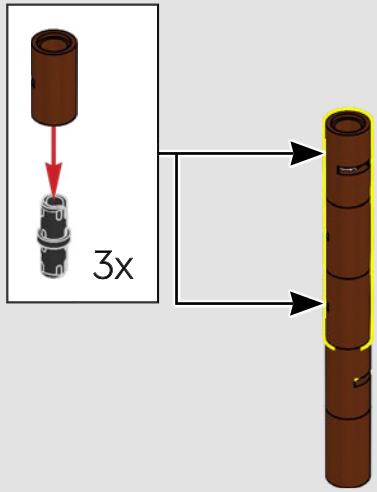

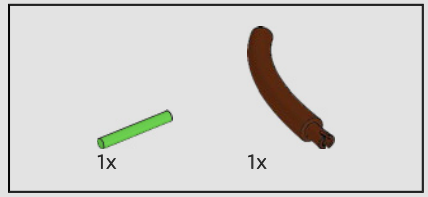

668

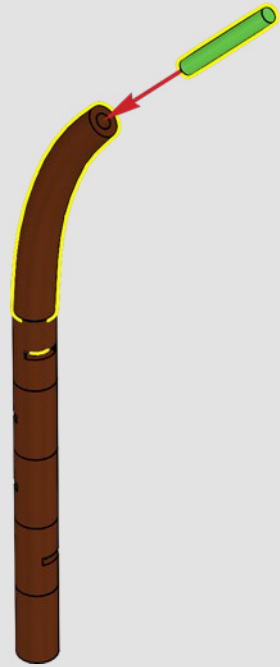

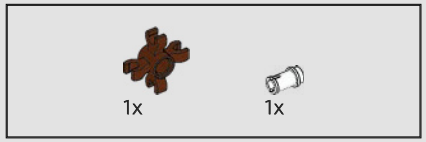

669

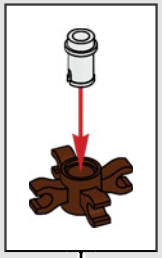

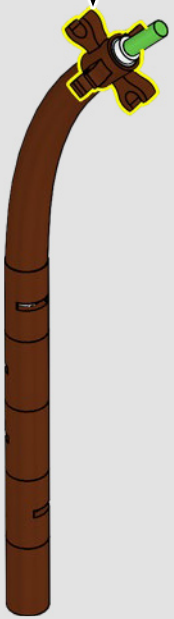

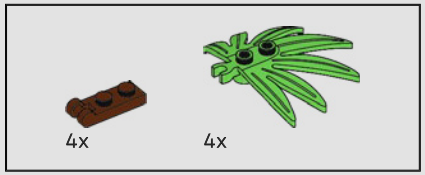

670

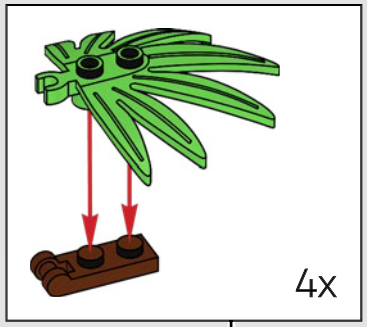

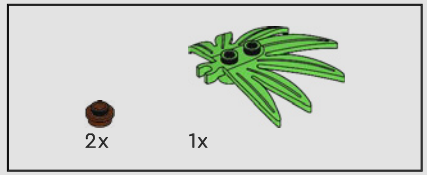

671

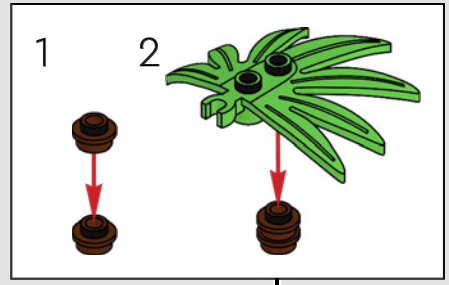

672

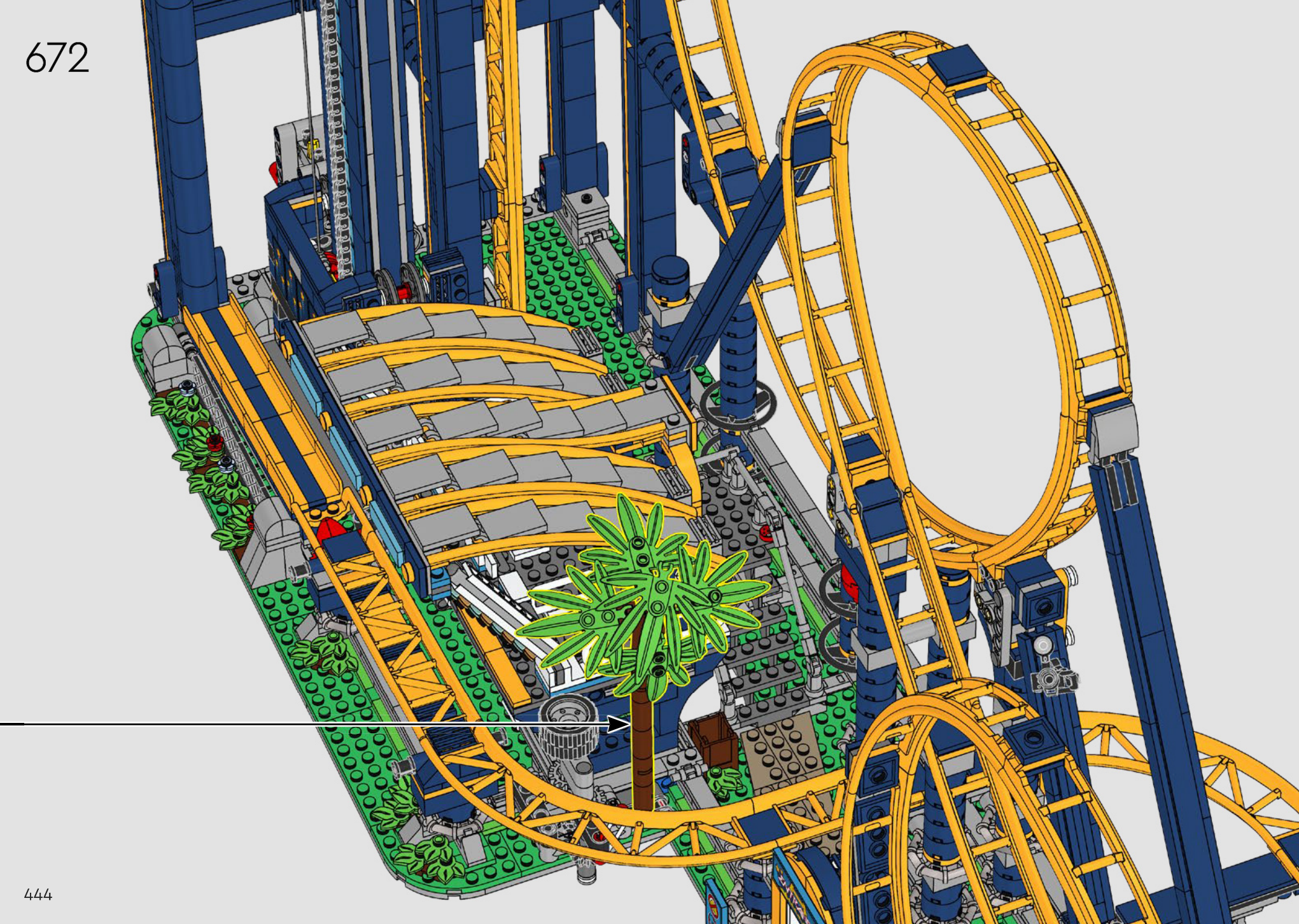

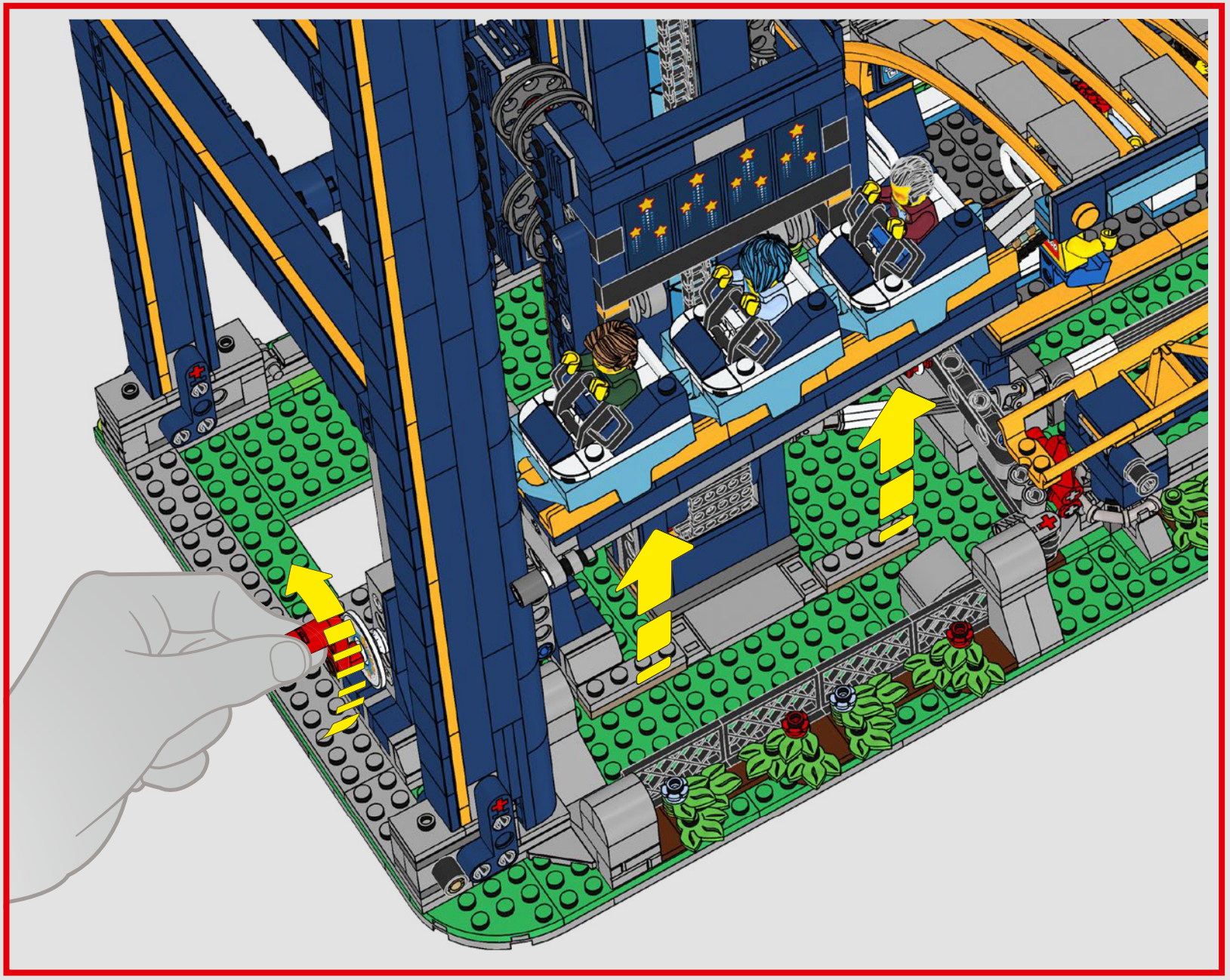

Rebuild the world™

10303

+

88015

+

88013

=

POWERED UP

Ready to be Powered Up

Add Powered Up components (available separately) to magically motorise all the mechanical functions. It also gives you the option of controlling your Loop Coaster via the cool Powered Up App.

HOW TO CARRY THE MODEL

It would be a shame if your newly built Loop Coaster came apart whilst you were moving it. If you lift it as shown in the image below, you should be good to go!

FEEDBACK AND WIN

FEEDBACK
AND **WIN**

Your feedback will help shape the future development of this product series.

Please visit:

FEEDBACK
UND **GEWINNEN**

Dein Feedback trägt zur Weiterentwicklung dieser Produktreihe bei.

Geh auf:

COMMENTEZ
ET **GAGNEZ**

Vos commentaires nous aideront à concevoir les futurs produits de cette gamme.

Rendez-vous sur :

COMENTA
Y **GANA**

Tu opinión nos ayudará a dar forma al desarrollo de esta serie de productos en el futuro.

Visita:

反馈有奖

您的反馈将有助于我们在今后改进本系列产品。

请访问：

LEGO.com/productfeedback

By completing, you will automatically enter a drawing to win a LEGO® set.

Terms & Conditions apply.

Durch Ausfüllen nimmst du automatisch an der Verlosung eines LEGO® Preises teil.

Es gelten die Teilnahmebedingungen.

En envoyant vos commentaires, vous serez automatiquement inscrit(e) à un tirage au sort qui vous permettra de remporter un prix LEGO®.

Offre soumise à conditions.

Al contestar, participarás automáticamente en el sorteo y podrás ganar un set LEGO®.

Sujeto a Términos y Condiciones.

完成我们的反馈调查，即可自动进入抽奖环节，赢取乐高®套装。

适用《条款和条件》。

LEGO and the LEGO logo are trademarks of the LEGO Group. ©2022 The LEGO Group.

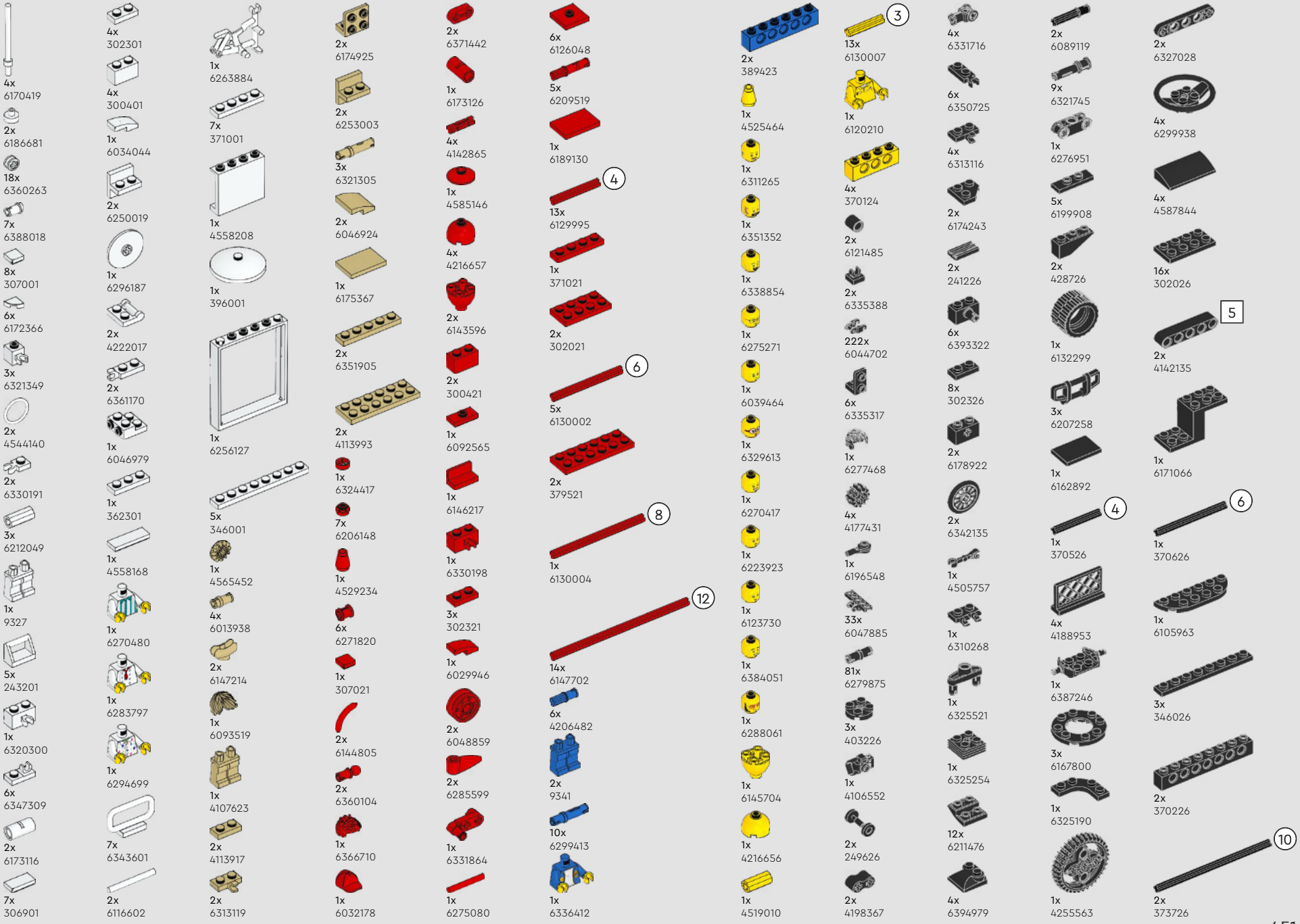
4x 6170419
2x 6186681
18x 6360263
7x 6388018
8x 307001
6x 6172366
3x 6321349
2x 4544140
2x 6330191
3x 6212049
1x 9327
5x 243201
1x 6320300
6x 6347309
2x 6173116
7x 306901
4x 302301
4x 300401
1x 6034044
2x 6250019
1x 6296187
2x 4222017
2x 6361170
1x 6046979
1x 362301
1x 4558168
1x 6270480
1x 6283797
1x 6294699
7x 6343601
2x 6116602
1x 6263884
7x 371001
1x 4558208
1x 396001
1x 6256127
5x 346001
1x 4565452
4x 6013938
2x 6147214
1x 6093519
1x 4107623
2x 4113917
2x 6313119
2x 6174925
2x 6253003
3x 6321305
2x 6046924
1x 6175367
2x 6351905
2x 4113993
1x 6324417
7x 6206148
1x 4529234
6x 6271820
1x 307021
2x 6144805
2x 6360104
1x 6366710
1x 6032178
2x 6371442
1x 6173126
4x 4142865
1x 4585146
4x 4216657
2x 6143596
2x 300421
1x 6092565
1x 6146217
1x 6330198
3x 302321
1x 6029946
2x 6048859
2x 6285599
1x 6331864
1x 6275080
6x 6126048
5x 6209519
1x 6189130
4
13x 6129995
1x 371021
2x 302021
6
5x 6130002
2x 379521
8
1x 6130004
12
14x 6147702
6x 4206482
2x 9341
10x 6299413
1x 6336412
2x 389423
1x 4525464
1x 6311265
1x 6351352
1x 6338854
1x 6275271
1x 6039464
1x 6329613
1x 6270417
1x 6223923
1x 6123730
1x 6384051
1x 6288061
1x 6145704
1x 4216656
1x 4519010
3
13x 6130007
1x 6120210
4x 370124
2x 6121485
2x 6335388
222x 6044702
6x 6335317
1x 6277468
4x 4177431
1x 6196548
33x 6047885
81x 6279875
3x 403226
1x 4106552
2x 249626
2x 4198367
4x 6331716
6x 6350725
4x 6313116
2x 6174243
2x 241226
6x 6393322
8x 302326
2x 6178922
2x 6342135
1x 4505757
1x 6310268
1x 6325521
1x 6325254
12x 6211476
4x 6394979
2x 6089119
9x 6321745
1x 6276951
5x 6199908
2x 428726
1x 6132299
3x 6207258
1x 6162892
4
1x 370526
4x 4188953
1x 6387246
3x 6167800
1x 6325190
1x 4255563
2x 6327028
4x 6299938
4x 4587844
16x 302026
5
2x 4142135
1x 6171066
6
1x 370626
1x 6105963
3x 346026
2x 370226
10
2x 373726

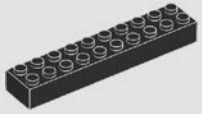
1x
4617860

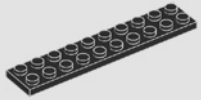
3x
383226

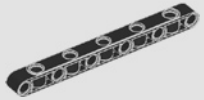
1x
6330585

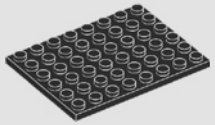
2x
303626

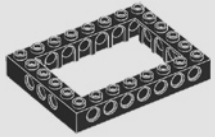
3x
4188143

6x
4514845

2x
389526

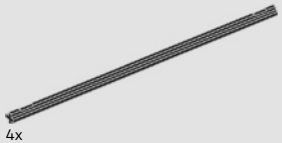
4x
6317564

69x
6092586

1x
6374049

1x
6288100

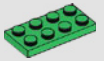
1x
302028

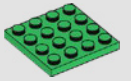
1x
4243821

3x
6038682

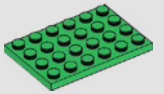
1x
4116671

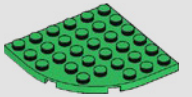
3x
6021999

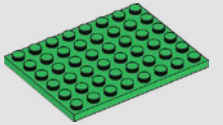
1x
4507311

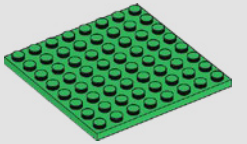
1x
4161677

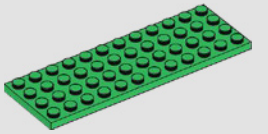
2x
4279059

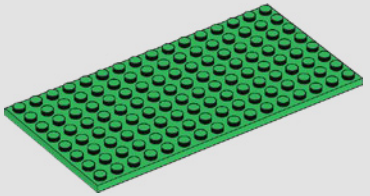
12x
4610602

31x
6182261

1x
6161772

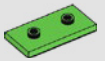
31x
6293826

5x
6347460

1x
6384077

1x
6274738

1x
6163986

1x
6240532

8x
6240225

2x
6326484

1x
6240211

1x
6144130

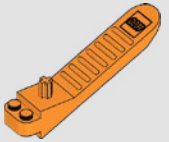
1x
6240515

10x
4183133

1x
6214557

1x
4279734

6x
6338985

1x
4524098

3x
6250168

9x
4626904

3x
4267874

1x
4570451

8x
4184108

8x
4255413

4x
4504374

16x
6293318

4x
6253883

4x
4631385

3x
6256616

15x
6236571

112x
6384911

6x
6216905

4x
6299536

125x
4505985

1x
4162916

26x
4249891

14x
6223838

32x
6022579

6x
6094143

4x
6092588

4x
4667331

3x
6135606

55x
4528981

6x
6103405

15x
6224472

36x
6037890

2x
6389696

1x
6061569

139x
6285466

36x
4205004

4x
6228123

6x
6025375

3x
4153653

4x
6144753

2x
6103392

4x
4528482

13x
4177735

8x
6132566

6x
6233955

2x
4540280

14x
6097484

8x
6103774

29x
6186974

6x
4530028

3x
6385309

12x
6271839

6x
6042956

9x
6103985

2x
4264569

3x
6037886

1x
6331690

6x
6135597

24x
6219781

104x
4569836

4x
6357956

33x
4667595

59x
6384912

11x
6384913

24x
4252437

6x
4508313

2x
6221672

1x
6097420

1x
6326191

37x
6100239

2x
6233695

13x
4507080

36x
6250216

3x
6277303

49x
6385495

13x
6200663

11
3x
6151077

7x
6384914

2x
6186638

40x
6258407

1x
6294404

1x
4206504

1x
6348251

1x
6224075

8x
6240227

4x
6322822

2x
6061685

7x
6262140

29x
6385485

16x
6028736

2x
4622062

1x
6099730

3x
6193972

8x
6099714

12x
6307254

2x
6385484

2x
6335569

2x
6097503

6x
6072668

8x
6328167

3x
4621543

7x
6097511

17x
6132408

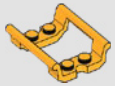
2x
6369943

2x
6365966

14x
6020074

2x
6172431

43x
6133817

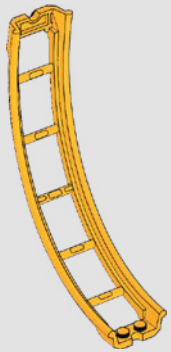
6x
6369920

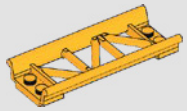
3x
6385487

1x
6385491

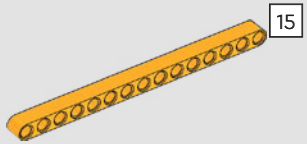
15
1x
6275898

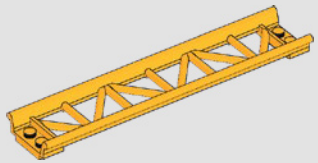
10x
6385493

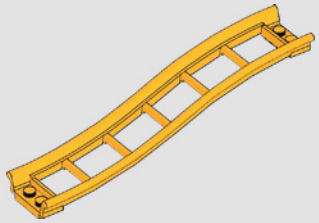
2x
6385488

6x
6385486

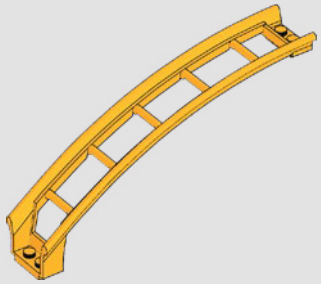
4x
6385494

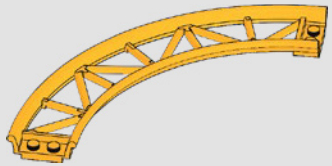
5x
6385490

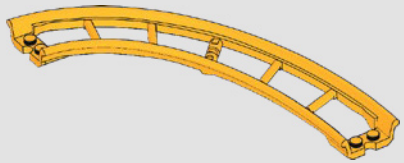
3x
6369921

6x
6215659

1x
6153585

1x
6093515

1x
6223059

5x
6173132

6x
4211151

7x
6218366

1x
6349130

1x
6075208

2x
4520638

4x
6102975

1x
6326087

1x
6344930

5
5x
6159763

3x
4211204

1x
4221590

2x
4211214

1x
6055145

3x
6170418

8x
6355025

1x
6326748

4x
6343976

7x
6258831

4x
6278156

26x
4211399

4x
6336539

1x
4558953

26x
6308012

4x
4211415

12x
4211476

2x
6362975

2x
6345639

6x
6281998

2x
6248890

2x
6225246

2x
6348143

9x
6173127

1x
4211526

2x
4640536

1x
4227657

1x
6280396

2x
6268924

1x
6043656

13x
6093859

3x
4515374

8x
6168633

6x
6134378

14x
4211350

41x
4211398

2x
4568637

2x
6152344

4x
6015344

6x
6066097

4x
6000066

20x
4211541

4x
6117967

1x
4654580

6x
6258820

1x
4258308

2x
6217876

5x
4211580

7x
4211632

2x
4244627

6x
6227184

1x
6206249

62x
6326078

1x
6279023

13x
6126082

2x
4211376

11x
4211397

2x
6185676

2x
6102357

4x
4494475

3x
6065824

3x
4211387

2x
4211410

3x
4490127

15x
6347704

12x
6043639

4x
4654577

1x
6321747

2x
4515369

1x
6359225

4x
6276969

3x
6195471

3x
4211655

1x
6186129

2x
6273212

2x
6335279

3x
4211429

2x
6093527

2x
6271815

5x
6319336

2x
6116608

1x
6370947

8x
4211396

6x
6171894

2x
4211386

2x
4211421

35x
4211356

3x
4211394

10x
4211441

3
2x
4211815

6x
6109684

6x
6211969

3x
4558169

1x
4211419

5x
6118827

1x
4211517

5
3x
4211639

1x
6055519

1x
6171067

38x
4211445

2x
4211636

20x
6331691

2x
6015347

3x
6331428

9x
4211395

4x
4622742

27x
4211452

2x
4211393

25x
4211438

2x
4211466

8x
4211549

2x
4211837

1x
4243797

3x
4579294

15x
4211406

9
1x
4535768

2x
4211474

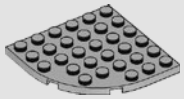
1x
6368430

8x
4251149

1x
4211462

3x
4514846

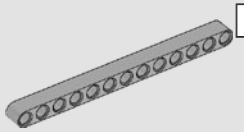
13
6x
4522934

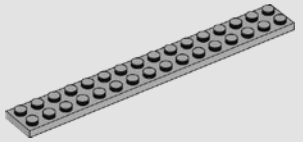
17x
4211486

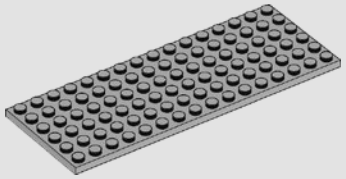
11x
4211733

3x
6151664

1x
6379470

3x
6352226

14x
4653988

51x
6369497

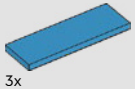
3x
6337197

2x
6284131

6x
6151666

2x
4211090

1x
6231765

5x
6100030

1x
6245283

1x
6058193

2x
6296856

1x
4516546

1x
4211088

6x
6039479

2x
6276873

2x
6266225

4x
6364452

6x
6123814

8x
6321744

3x
6352600

4x
4211094

12x
6236949

6x
6408023

2x
4211109

1x
6167281

2x
6267047

2x
6133119

1x
4239891

10x
6135290

1x
4211043

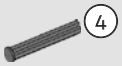
4
2x
6083620

1x
4210725

4x
4213607

3x
6306725

5x
4211065

2x
4210753

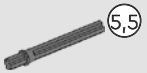
5,5
2x
4508553

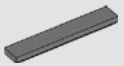
2x
4210651

1x
6219044

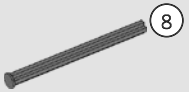
8
1x
4499858

5x
4210998

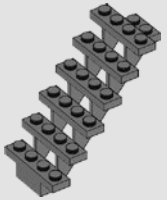
1x
6226634

1x
4260707

1x
4211134

5x
4210706

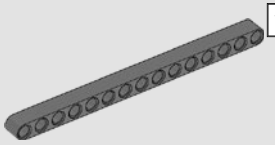
15
3x
4542576

3x
6209683

1x
6368313

1x
6387994

1x
6386209

1x
6388194

1x
6223880

1x
4586410

1x
6372359

4x
6359941

1x
6353962

1x
6350675

29x
6020990

4x
4655243

1x
6036500

1x
6132411

1x
6331949

3x
6360056

51x
6347670

1x
6119126

10x
6258069

1x
4619513

6x
4624705

4x
6070757

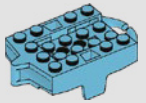
3x
6261518

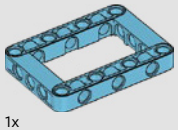
1x
6300331
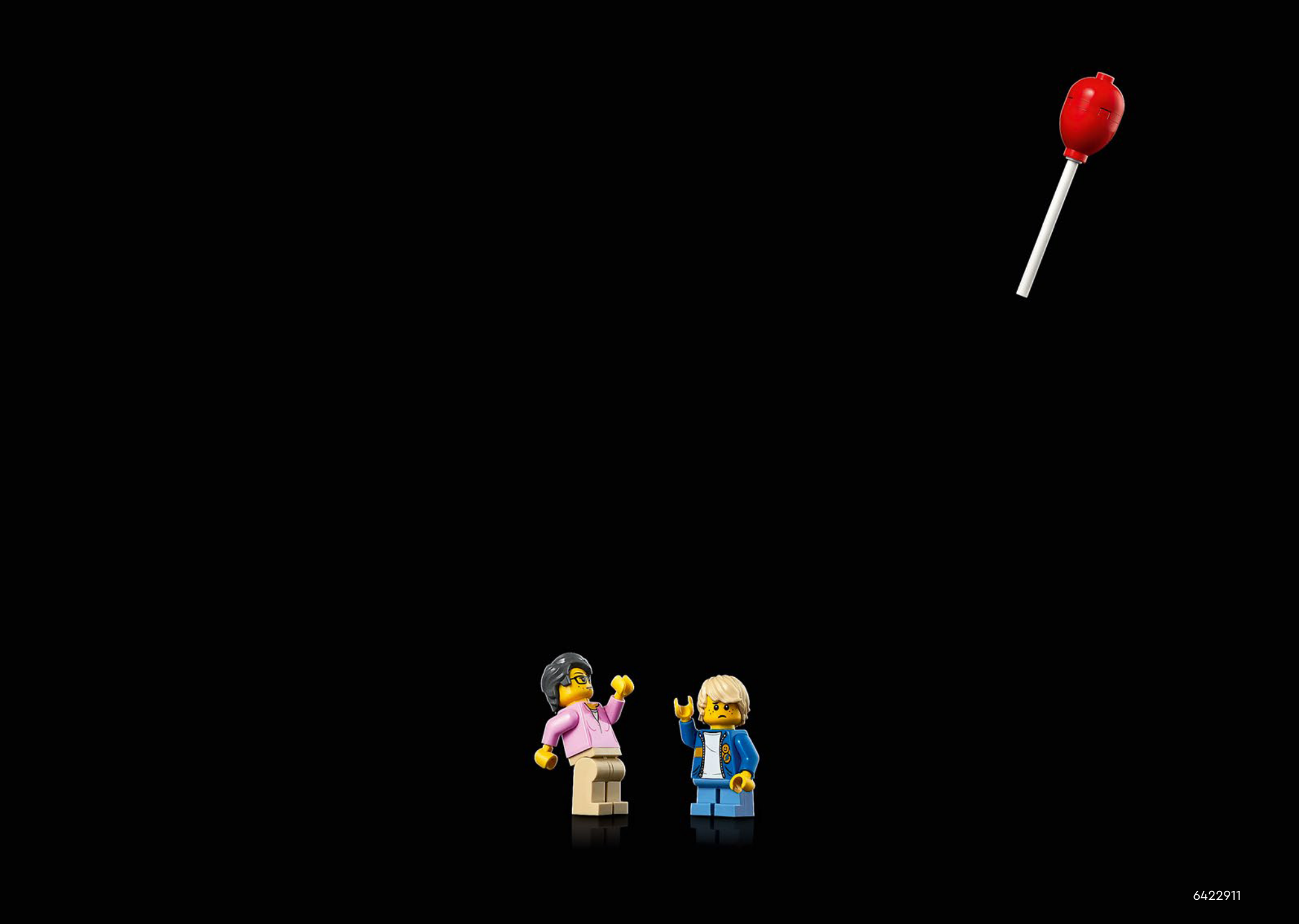
Customer Service
Kundenservice
Service Client
Assistenza clienti
Atención al cliente
Serviço de Apoio ao Consumidor
Ügyfélszolgálat
Klientu apkalpošanas dienests
Serviciul pentru client
客户服务
コンシューマーサービス
고객 서비스
LEGO.com/service